5. BLOCK DIAGRAM

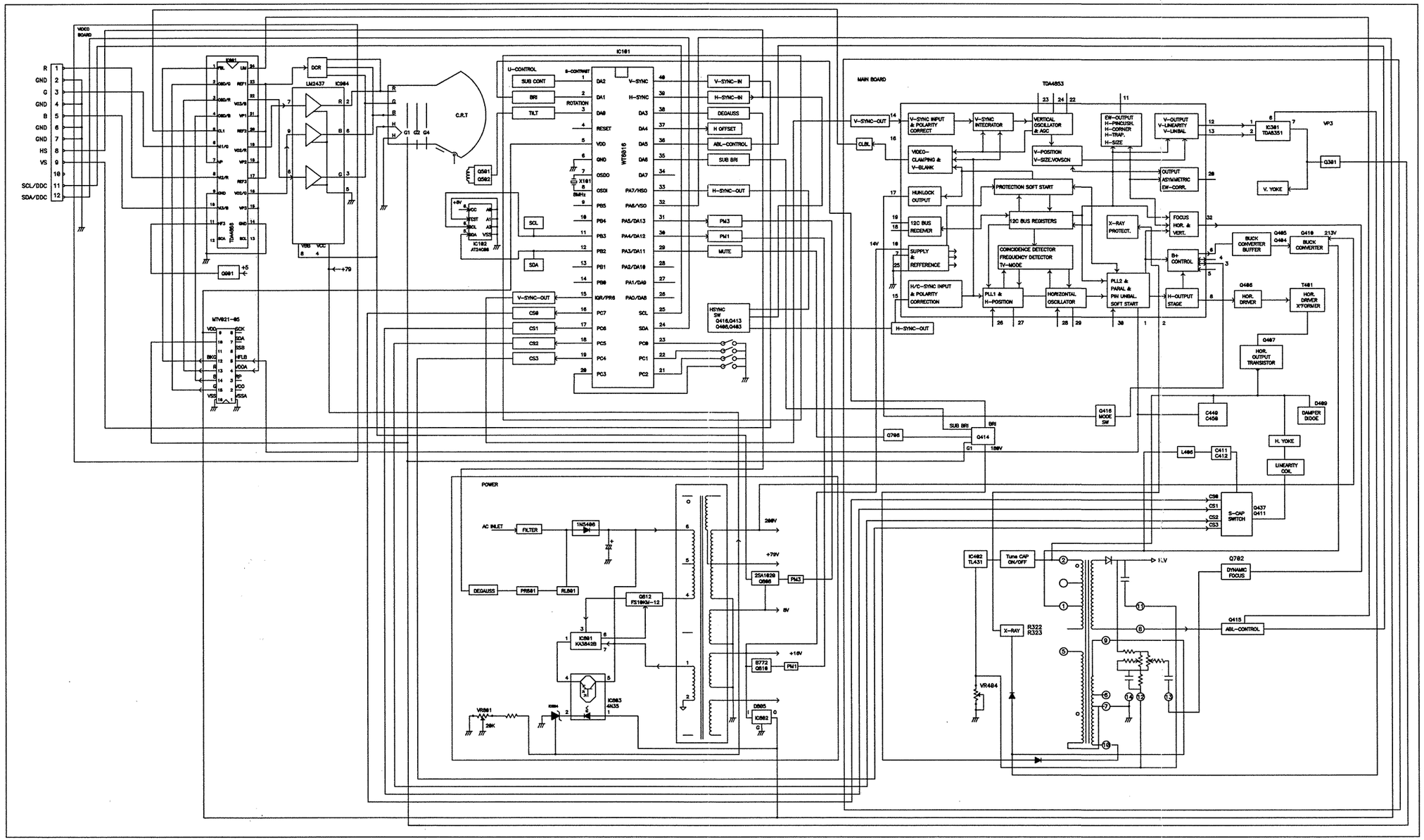

E70f 7/20/2000

Confidential - Do Not Copy

6.1. U-CONTROL SCHEMATIC DIAGRAM

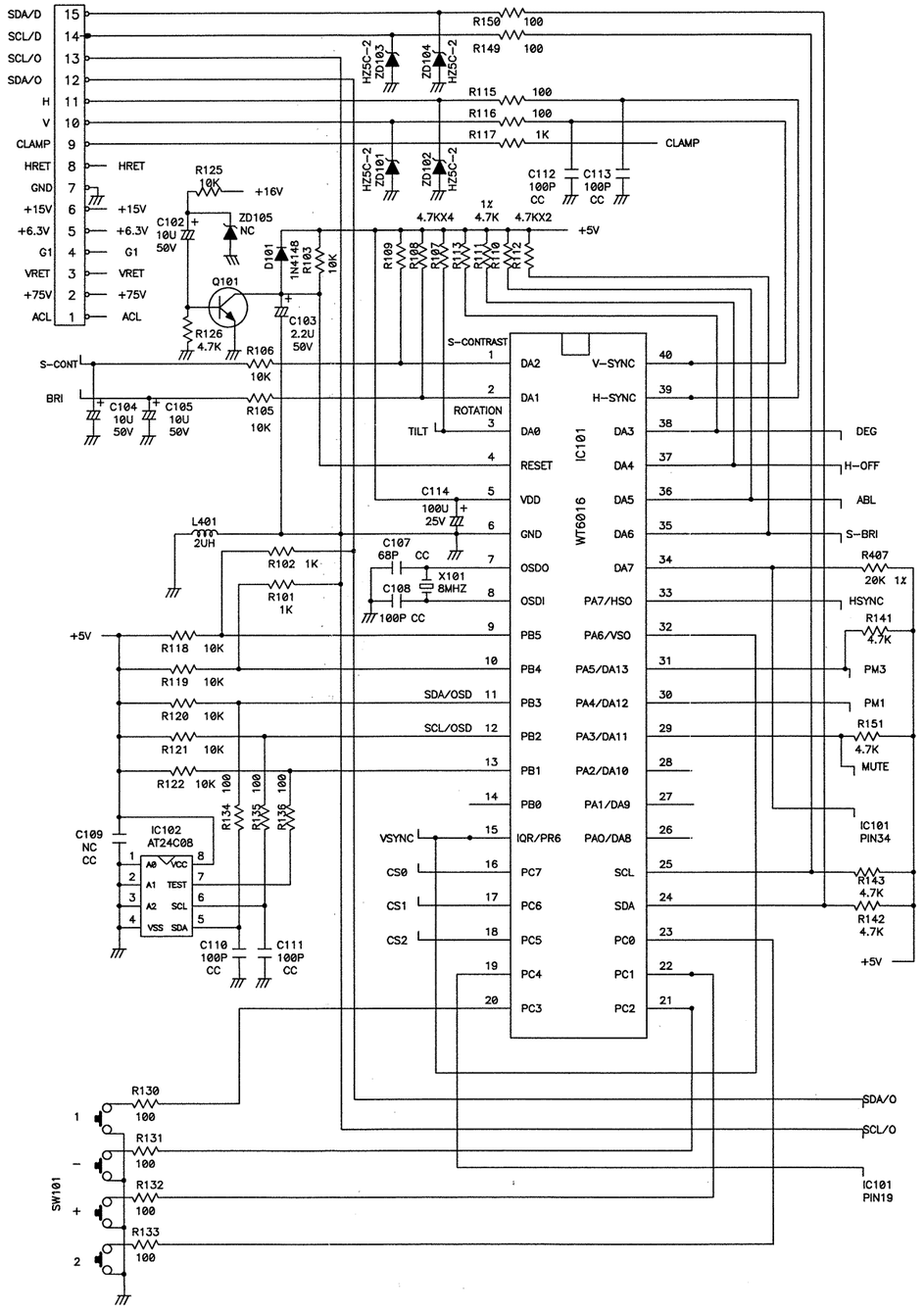

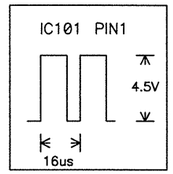

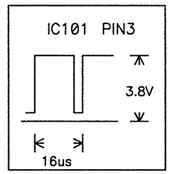

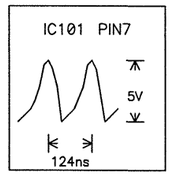

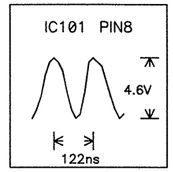

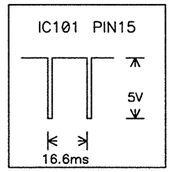

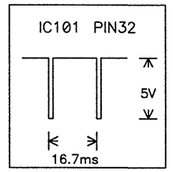

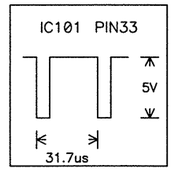

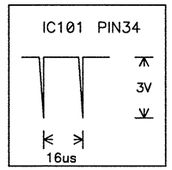

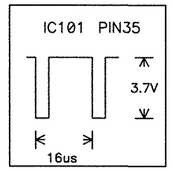

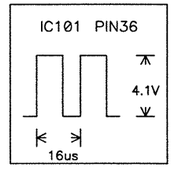

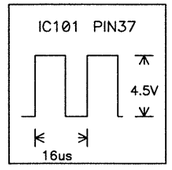

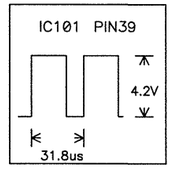

IC101

PIN	1	2	3	4
Voltage	4.5V	4V	3.8V	5V
PIN	5	6	7	8
Voltage	5V	0V	5V	4.6V
PIN	9	10	11	12
Voltage	5V	5V	5V	5V
PIN	13	14	15	16
Voltage	5V	--	5V	5V
PIN	17	18	19	20
Voltage	0V	0V	--	5V
PIN	21	22	23	24
Voltage	5V	5V	5V	5V
PIN	25	26	27	28
Voltage	5V	--	--	--
PIN	29	30	31	32
Voltage	0V	0V	3.3V	5V
PIN	33	34	35	36
Voltage	5V	3V	3.7V	4.1V
PIN	37	38	39	40
Voltage	4.5V	0V	4.2V	4.2V

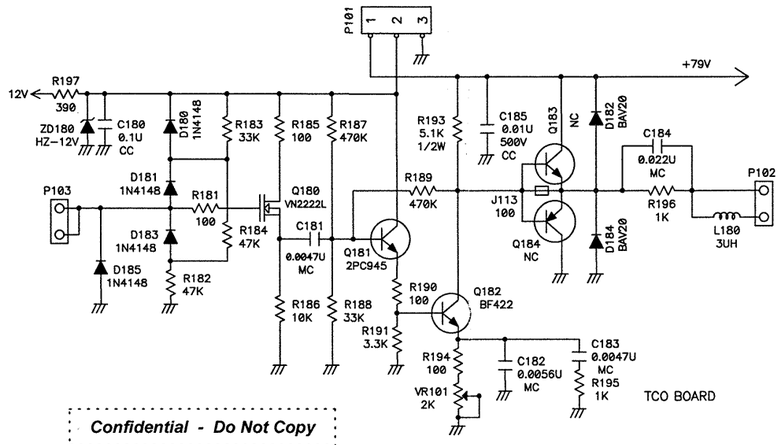

U-CONTROL SCHEMATIC DIAGRAM

Confidential - Do Not Copy

6.2. VIDEO SCHEMATIC DIAGRAM

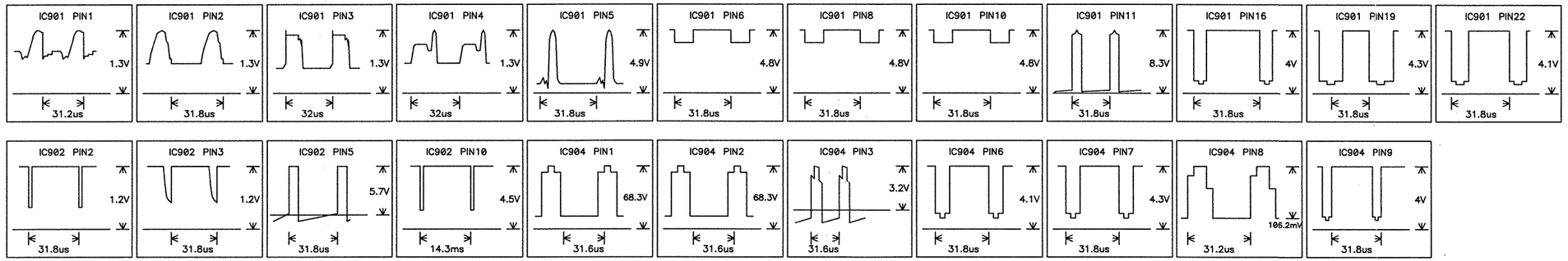

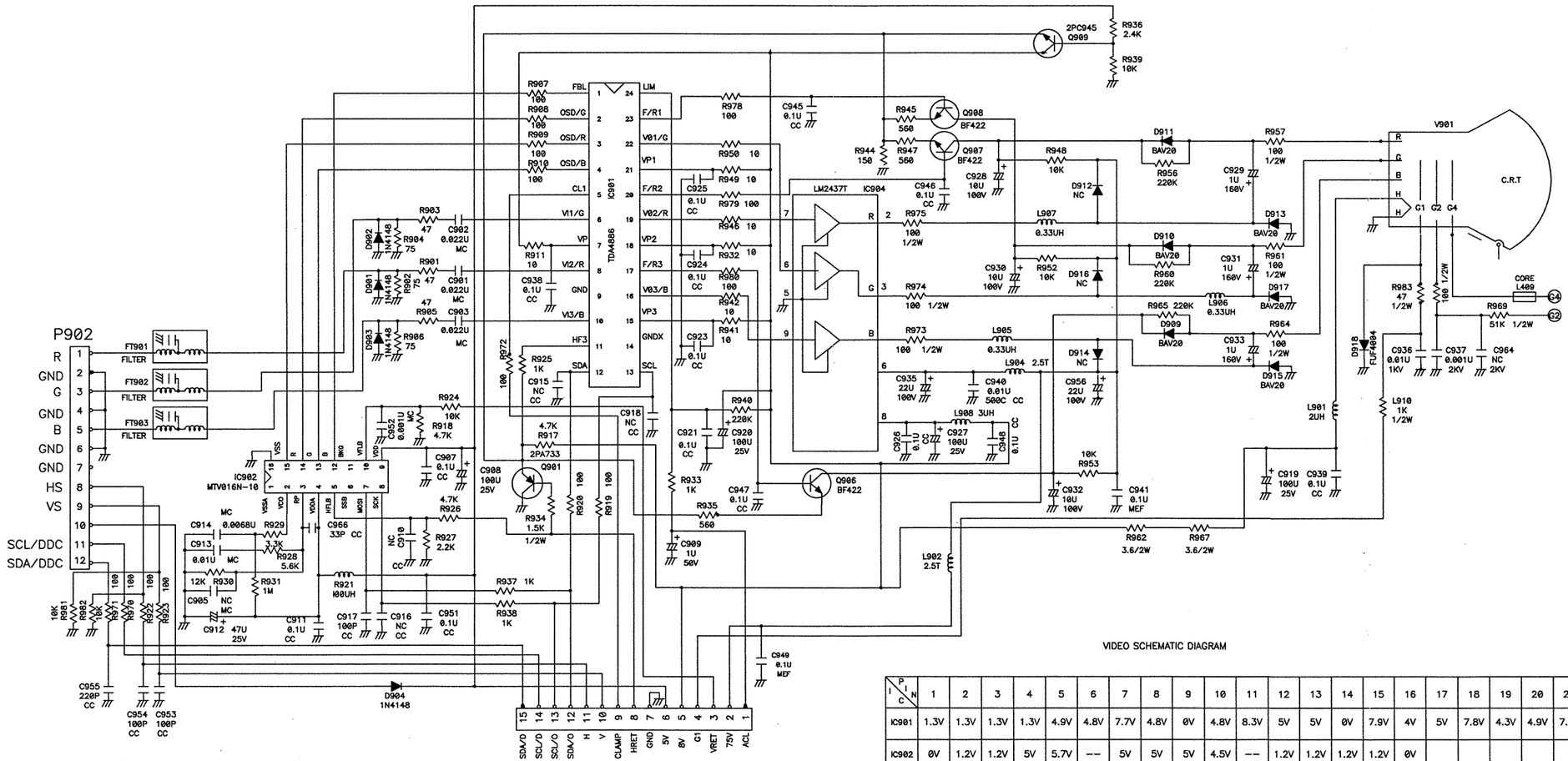

VIDEO SCHEMATIC DIAGRAM

IC \ PIN	1	2	3	4	5	6	7	8	9	10	11	12	13	14	15	16	17	18	19	20	21	22	23	24
IC901	1.3V	1.3V	1.3V	1.3V	4.9V	4.8V	7.7V	4.8V	0V	4.8V	8.3V	5V	5V	0V	7.9V	4V	5V	7.8V	4.3V	4.9V	7.8V	4.1V	5.1V	4V
IC902	0V	1.2V	1.2V	5V	5.7V	--	5V	5V	5V	4.5V	--	1.2V	1.2V	1.2V	1.2V	0V								
IC904	68.3V	68.3V	3.2V	80V	0V	4.1V	4.3V	106.2 mV	4V															

E70f 7/20/2000

6.3. H/V DEFLECTION SCHEMATIC DIAGRAM

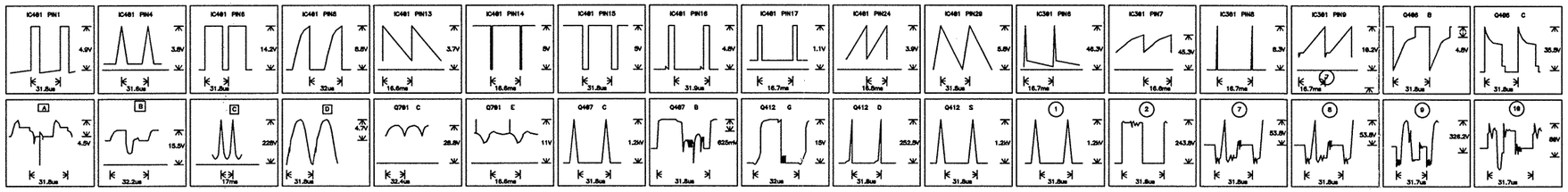

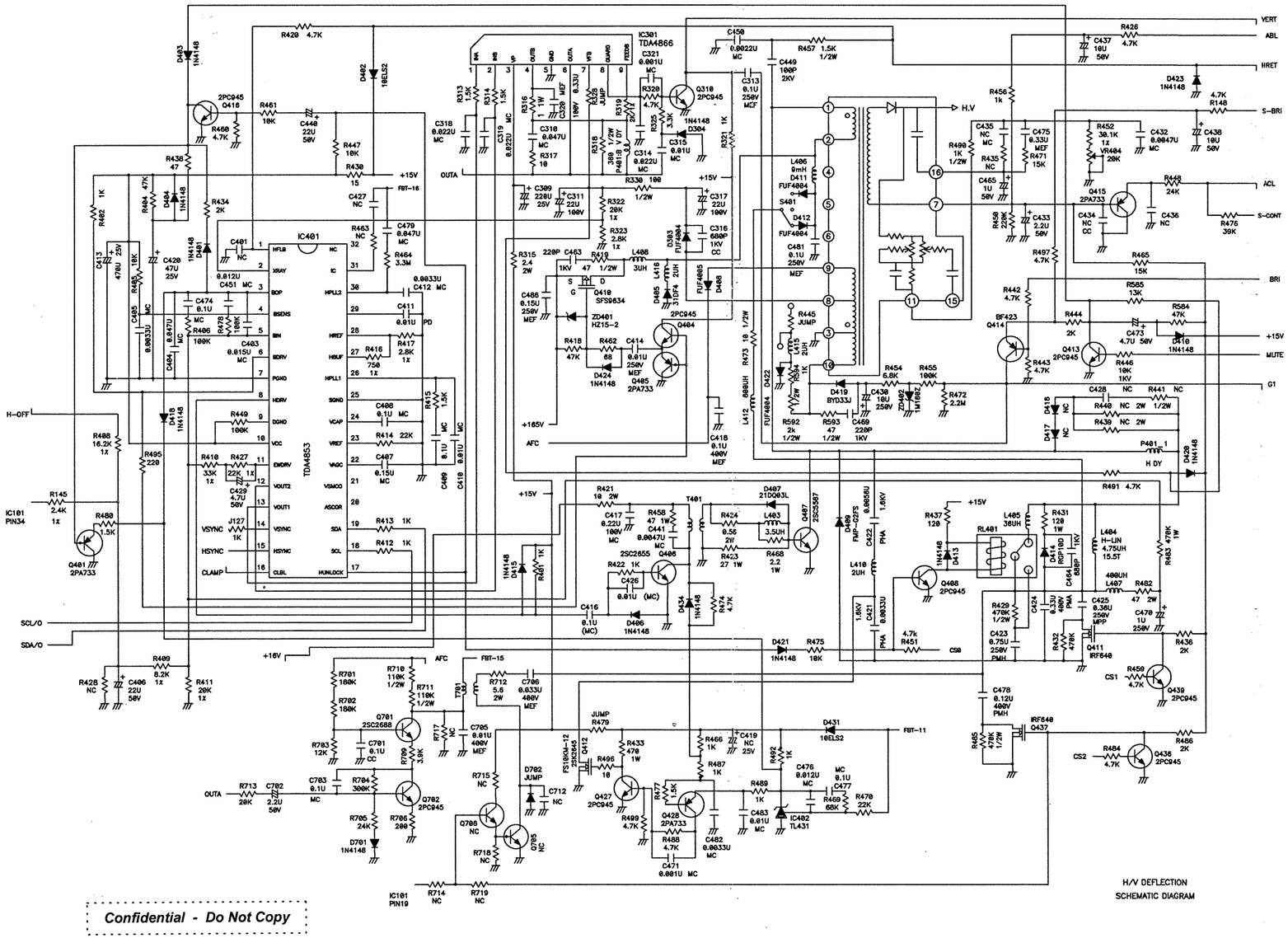

PIN	IC401	IC301	T403
1	4.9V	3V	1.2kV
2	5.3V	3V	243.8V
3	3.8V	8V	--
4	3.8V	6.3V	--
5	2.6V	0V	--
6	14.2V	46.3V	--
7	0V	45.3V	53.8V
8	8.8V	8.3V	53.8V
9	1.3V	10.2V	326.2V
10	1.2V		80V
11	2.3V		
12	3.5V		
13	3.7V		
14	5V		
15	5V		
16	4.8V		
17	1.1V		
18	5V		
19	5V		
20	--		
21	--		
22	3.2V		
23	3V		
24	3.9V		
25	0V		
26	3.8V		
27	2.5V		
28	2.6V		
29	5.8V		
30	5V		
31	5V		
32	--		

PIN	Q406	Q407	Q701
B	1.4V	625mV	9.5V
C	35.5V	1.2kV	28.8V
E	0V	--	11V

PIN	G	D	S
Q412	15V	252.5V	1.2kV

PIN	A	B	C	D
Vol	4.5V	15.5V	228V	4.7V

H/V DEFLECTION
SCHEMATIC DIAGRAM

E70f 7/20/2000

6.4. POWER SUPPLY & TILT SCHEMATIC DIAGRAM

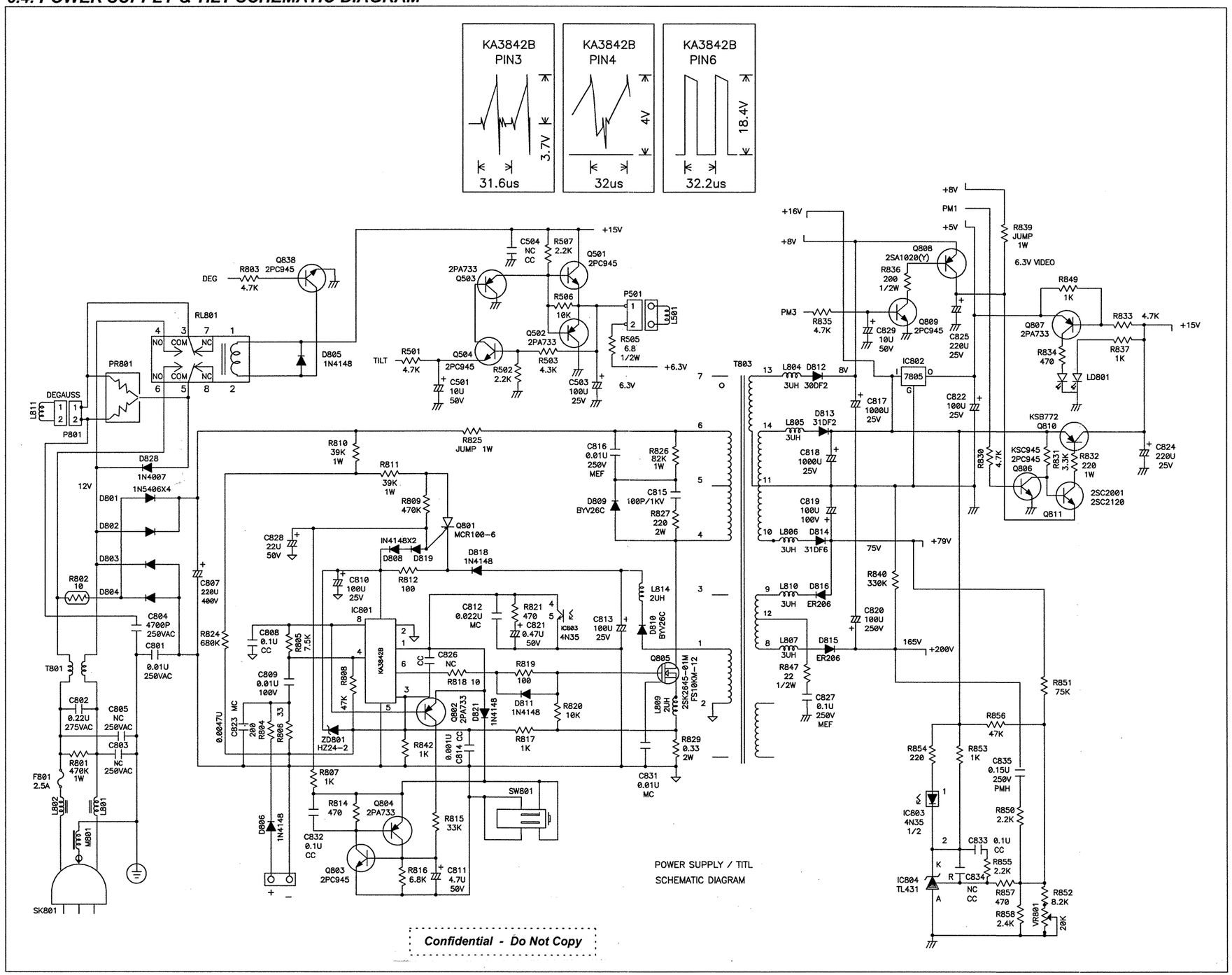

E70f 7/20/2000