Table of Contents

Section 1
Table of Contents

Section 1 **Table of Contents**

Section 2 **Preface**

2/1	*Welcome*
2/2	*How to use Your Manual*
2/3	*Safety Procedures*

Section 3 **Electronic Repair Basics**

3/2	*Electronic Fundamentals*
3/2 - C	*Components*
3/2 - O	*Ohm's Law*
3/2 - PVC	*Power, Voltage, Current*
3/2 - QUS	*Quantities, Units, Symbols*
3/3	*Troubleshooting Techniques*
3/3 - LLM	*Low-Level Measurements*
3/4	*Soldering/Desoldering*

Section 4 **Tools and Test Equipment**

4/1	*Tools for Repair*
4/2	*Basic Test Equipment*
4/3	*Advanced Test Equipment*
4/3 - DMM	*Digital Multimeter*
4/3 - F	*Frequency Counter*
4/3 - O	*Oscilloscope*
4/3 - TEP	*Test Equipment Probes*

Section 5 **Video**

5/Cam	*Camcorder*
5/Cam - A	*An Introduction*

Table of Contents

Section 5 **Video** *(Continued)*

5/Cam - F	*Features*
5/Cam - TE	*Test Equipment*
5/Cam - TR	*Troubleshooting and Repair*
5/Cam - VCS	*Various Case Studies*
5/VCR	*Video Recorder*
5/VCR - A	*An Introduction*
5/VCR - M	*Maintenance*
5/VCR - TE	*Test Equipment*
5/VCR - TR	*Troubleshooting and Repair*
5/VCR - VCS	*Various Case Studies*

Section 6 **Television**

6/TTV	*Tube Television*
6/TTV - A	*An Introduction*
6/TTV - TE	*Test Equipment*
6/TTV - TR	*Troubleshooting and Repair*
6/TTV - VCS	*Various Case Studies*

Section 7 **Audio**

7/A	*Amplifier*
7/A - A	*An Introduction*
7/A - TR	*Troubleshooting and Repair*
7/A - VCS	*Various Case Studies*
7/CD	*CD Player*
7/CD - F	*Features*
7/CD - M	*Maintenance*
7/CD - TE	*Test Equipment*
7/CD - TR	*Troubleshooting and Repair*
7/R	*Radio*
7/R - F	*Features*
7/R - TR	*Troubleshooting and Repair*
7/R	*Receiver*
7/R - VCS	*Various Case Studies*

Table of Contents

Section 7 **Audio** *(Continued)*

7/T	*Tuner*
7/T - VCS	*Various Case Studies*

Section 8 **Automobile Electronics**

8/TE	*Test Equipment*
8/TR	*Troubleshooting and Repair*
8/TR - ECM	*Electronics Control Module*
8/TR - PS	*Power Systems*
8/VCS	*Various Case Studies*

Section 9 **Computer Equipment**

9/PC	*Personal Computer*
9/PC - AM	*Architecture of Microcomputers*
9/PC - TE	*Test Equipment*
9/PC - TR	*Troubleshooting and Repair*
9/PC - VCS	*Various Case Studies*
9/PR	*Printer*
9/PR - A	*An Introduction*
9/PR - M	*Maintenance*
9/PR - TR	*Troubleshooting and Repair*

Section 10 **Home Appliances**

10/A	*An Introduction*
10/A - BPS	*Basic Power Sources*
10/TR	*Troubleshooting and Repair*
10/TR - A	*An Introduction*
10/TR - A/C • R	*Air Conditioners/Refrigerators*
10/TR - C	*Controls*
10/TR - ECM	*Electronically Controlled Motors*
10/TR - T	*Transformers*
10/TR - Th	*Thermostats*

Table of Contents

Section 11 Miscellaneous Devices

11/A *An Introduction*

11/C *Copier*
11/C - A *An Introduction*
11/C - TR *Troubleshooting and Repair*

11/F *Fax Machine*
11/F - A *An Introduction*
11/F - M *Maintenance*

11/Tel *Telephone*
11/Tel - A *An Introduction*
11/Tel - TE *Test Equipment*
11/Tel - TR *Troubleshooting and Repair*

Section 12 Reference Materials

12/A *Addresses*
12/I *Indices*
12/S *Schematics*

(Note: For more detailed information see "Table of Contents" at the beginning of each section.)

Section 2
Preface

Table of Contents

2/1 *Welcome*

2/2 *How to Use Your Manual*

2/3 *Safety Procedures*

2/1
Welcome

Welcome to the **Electronics Repair Manual!** This unique publication aims to provide the starter, as well as the professional, with clear and concise information on how to repair and maintain a wide range of electronic equipment.

Electronic equipment is complex, becoming more complex almost by the day. Our main objective is to ensure that the **Electronics Repair Manual** contains comprehensive, instructive and up-to-date material. To help us meet this goal, regular supplements to the book will provide you with additional troubleshooting and repair instructions, and technological updates.

In many cases, electronic equipment is delicate. Touch the wrong point with a probe, or use an improper cleaning material, and what was a simple job turns into a much more extensive one.

One home technician was trying to lubricate the tracking bars of a CD player with a spray can of WD-40. His intention was to cure the skipping that was occurring. Instead he ended up destroying the main circuit board and the laser's lens.

The **Electronics Repair Manual** will help you avoid mistakes, and give you plenty of repair tips and helpful advice.

Safety is the most important consideration when you are working with electronics. Always take precautions for your personal safety and the safety of the equipment on which you are working. Your manual includes a detailed safety article which outlines the steps you should take to avoid injury. The article also describes the measures to take in the event of an injury. It is imperative that you only tackle those faults which you understand.

Putting this another way, you should only attempt to repair an item of electronic equipment if you are fully confident that you understand what you are doing. Your **Electronics Repair Manual** will give you the information and confidence to tackle even complex problems. However, you should proceed cautiously at all times. WEKA Publishing is not responsible for any damage to health or equipment.

2/1 Welcome

Many of you will wish to specialize in particular areas of electronic maintenance. Others will wish to obtain a broader understanding of how to service electronic equipment. The Electronics Repair Manual is designed to satisfy both needs, providing introductory and advanced information on a variety of equipment.

We welcome responses from our readers. Your comments and suggestions help us to determine the contents of your future supplements. In a sense, you become a member of our editorial team. You help us to make the manual your manual — to make it what *you* want it to be.

Please use the attached questionnaire to let us know your interests. Tell us which devices, general references, indices, and technologies you would like to see covered in the future.

Whether you are a professional technician or an enthusiast working at home, we hope that you enjoy using the **Electronics Repair Manual** and wish you great success in all of your efforts!

Sincerely,

Gene B. Williams
Joseph Desposito
Editors, **Electronics Repair Manual**

2/2
How to Use Your Manual

The **Electronics Repair Manual** contains 12 sections. Each section is further divided into chapters.

Sections 1 to 4 cover general information: **Table of Contents, Preface, Electronic Repair Basics,** and **Tools and Test Equipment.** The chapters in these sections are divided numerically, as you can see in the **Table of Contents** in Section 1.

Sections 5 to 11 contain repair information on specific types of electronic equipment, ranging from radio receivers and CD players to personal computers. The chapters in these sections are divided alphabetically.

For example, in "Section 5: Video" you can locate information on camcorders by looking for articles with "5/Cam" as a heading. When you need VCR information, look for "5/VCR".

This structure will help you keep your manual organized as it grows in the future, allowing you to quickly locate needed information. Below are headings for different sections, showing how the sections are subdivided by numbers and/or alphabetically.

Section 3 • Electronics Repair Basics

3/2
Electronics
Fundamentals

3/2 - C	Components
3/2 - C - PC	Passive Components
3/2 - C - PC - R	Resistors

Section 5 • Video

5/Cam
Camcorders

5/Cam - TR	Troubleshooting and Repair
5/Cam - TR - PS	Power Supplies

If you were interested in finding some basic information on resistors, the first place you would look would be "Section 3: **Electronic Repair Basics**". Once in Section 3, you would locate "Chapter 2: **Electronic Fundamentals**". In example 1, you will see "3/2 **Electronic Fundamentals**" in the black box.

Once you are in Chapter 2, you would look under the subhead "**Components**", which is again divided into "**Active Components**" and "**Passive Components**". Since resistors are passive components, you would look into this subheading.

As you can see in example 1, the subhead abbreviation for "**Components**" is **C**. The abbreviation for "**Passive Components**" is **PC**. Under the passive components subheading you will find the resistors article abbreviated s "**R**". That is how the article got its chapter number "**3/2-C-PC-R**".

The second example shows you how to locate information on troubleshooting camcorder power supplies.

1) You would look for camcorders in "Section 5: **Video**" under "**5/Cam**".
2) All troubleshooting and repair information is abbreviated with "**TR**".
3) A logical abbreviation for power supplies is "**PS**".

The article you are looking for is labeled "**5/Cam-TR-PS**". The following short list will show you some abbreviations that are used for each section:

A: An Introduction	**TE:** Test Equipment
F: Features	**TR:** Troubleshooting and Repair
M: Maintenance	**VCS:** Various Case Studies

All other abbreviations reflect the starting letters of the devices, parts, and components for which you are looking.

Section Twelve contains **Reference Materials**. This section is subdivided into "**12/A**" for **Addresses**, "**12/I**" for **Indices**, and "**12/S**" for **Schematics**.

We developed this alphabetical structure for your manual to allow you to easily insert future articles into the book, without messing up a numerical structure. As your manual grows, you will always have a reference that's well organized, up-to-date and easy to use.

2/3
Safety Procedures

Nothing is more important than safety. Trying to save a few dollars in repair costs isn't worth risking electrocution.

Safety can be divided into two overall parts—your personal safety and equipment safety. Even an expensive computer system can be replaced. Your health, or your life, cannot. The most basic rule of safety is that if you think safety is for the other guy, let the job be, too.

Keep in mind that it isn't just your own safety that is of concern. You are responsible for the safety of everyone around you as well. Even if you recognize that a certain spot inside the TV set you're working on is dangerous, someone else may not. You might understand that the soldering iron is on and hot—a small child coming into your work area might think that it looks like a fun toy.

Once you and those around you are safe, be sure that the equipment is safe. Once a technician who was probing a power supply during an initial diagnosis, touched the probe in a way that caused a short circuit, and blew out the power supply.

Warnings

- *When replacing a fuse, use one that is an exact match. If the value is too small, the fuse is likely to blow; if the value is too high, the fuse can't provide protection.*
- *NEVER use a wire or other conductor to replace a fuse—not even tempo rarily.*
- *When possible, test and diagnose with the power off and the unit unplugged.*
- *Don't assume an unplugged unit is safe. Some components, particularly capacitors, can hold lethal charges for long periods of time.*
- *When power has to be applied, proceed with extreme caution. Whenever possible, use the "One Hand Rule" (keep one hand in your pocket).*
- *Use insulated tools, and hold them ONLY by the insulation.*

2/3 Safety Procedures

- *Wear insulated shoes.*
- *Work on a nonconductive surface, NEVER on a metal table.*
- *Be sure the work area is sufficiently lighted.*
- *The work area in general should be clean and well organized.*
- *Remember that heat may also be a danger. Some components get very hot during operation.*
- *Some tools, such as soldering irons, are meant to be hot. If the tip is hot enough to melt solder, it is hot enough to cause serious burns, damage to components and surfaces, and if you're careless the tip can melt through wires, including the tool's power cord.*
- *Always use the right tool for the job. For example, the tip of the screwdriver or wrench has to fit correctly. When clipping wires, use a wire cutter (and of the right size) not scissors.*
- *When replacing components, use an exact replacement.*
- *Remember: WHEN IN DOUBT, DON'T DO IT!*

Electrical Shock

Usually there is very little danger from the DC voltage in most equipment. It is generally of low value, in voltage and current. The greatest danger in these areas is to the equipment itself.

However, do not throw caution to the wind. Always assume the voltage and current are lethal, and you won't get into trouble.

Unless the device is powered by batteries, there is a power supply. This converts AC into DC. The danger to you begins at the wall outlet and could continue well past the power supply. (A television set, for example, takes a very high voltage from the power supply to drive the picture tube.)

The AC in the standard wall outlet is 117 VAC (nominal) and is normally protected by a 15 A or 20 A breaker or fuse. The purpose of the breaker or fuse is to reduce the danger of fire. DO NOT count on them to protect you or the equipment.

At 117 VAC, it takes just a fraction of an amp to cause your muscles to become

paralyzed. If this happens you won't be able to let go of what is causing the shock. With just a fraction of an amp more, your heart can become paralyzed.

That fuse or breaker allows 15 or more amps to flow almost indefinitely. This is hundreds of times what it takes to kill a person. Worse, since these breakers are designed to allow the heavier current draw for times when motors start, for a second or so the amperage flowing can be much higher.

The lesson, again, is that you should not be thinking of that breaker or fuse as a device that will protect you. It won't!

As stated above, when working around dangerous voltages and currents, you need to be insulated from the surroundings. It is not overly cautious to work on an insulated surface, while wearing insulated shoes on an insulated floor. Even then, keep one hand in your pocket (the "One Hand Rule") to avoid accidentally having yourself become part of the AC circuit. Merely keeping that other hand back isn't enough. You might be tempted to reach forward with it. Placing it in your pocket will force you to think about what you are doing.

Fire

Hopefully you will never have to deal with this problem. If you are careful, you never will. However, you need to be prepared, just in case.

The first step is to be sure that there is a safe and quick exit from the work area. This is yet another reason to keep the working area clean and uncluttered. If you have to get out of the area fast, climbing over boxes or taking the chance of tripping on electrical cords increases the danger.

Why would you suddenly have to flee? There are two main reasons. One is that you may not be able to get the fire under control. The other is that some electrical fires can release poisonous gases in the air.

Even if the fire is out, it may not be safe for you to remain.

At least one fire extinguisher should be immediately at hand, and easily accessible. This must be of the right type. For electrical fires you'll need the dry powder type (Type C). Liquids, and water in particular, only make matters worse.

Having a fire extinguisher around won't do much good if you don't know how to use it. The unit should also be serviced on a regular basis (some suggest once per year as a minimum). Don't rely on the gauge. Even if it shows "good" on the dial, the unit may not be functioning.

The working area should be protected with a proper alarm system. The fire alarm, like the fire extinguisher, should be tested regularly. Experts suggest that once per month is not too frequent.

First Aid

It is a good idea to have a quality first aid manual. You should know the basics—and know them well enough to apply them calmly under an emergency situation. You might even consider taking classes. Many hospitals and medical clinics offer free classes in CPR.

The working area should contain a complete first aid kit. As supplies are used from it, they should be replaced. Make sure that the kit is always fully stocked, and with fresh materials.

The Shock Victim

In the event of an electrical shock the first thing to do is to disconnect the power supply, or remove the person from the supply. Do this ONLY if it can be done safely and without risk of shock to yourself. This may mean standing on insulating material (if available) and pushing the live conductor with an insulator, such as a broom handle.

If the person is not breathing, and the heart is not beating, it is essential to act as quickly as possible. The ABC of first aid in these circumstances is:

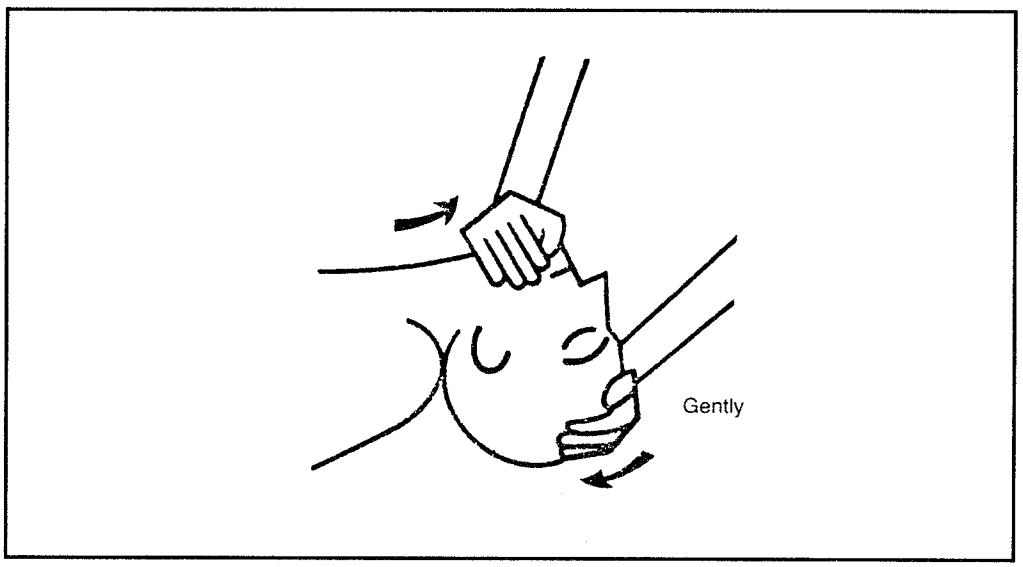

Figure 1: Turn the person onto their back and tilt the head.

Airway

Open the airway by rolling the person on his or her back, gently lifting the chin forward with one hand while pressing the forehead back with the other. This has the effect of lifting the tongue forward so that it does not block the airway. (See Figure 1).

Breathing

Pinch the victim's nose with your fingers and close it. Take a deep breath, and blow into the victim's mouth. Watch the chest to see if it rises (Figure 2). Remove your mouth and see if the chest sinks. If the chest does not go up and down, adjust the position of the head and jaw to clear the airway (Figure 3). Repeat the process.

Now check for a pulse as an indicator that the heart is beating (Figure 4). If it is not, go immediately to "Circulation".

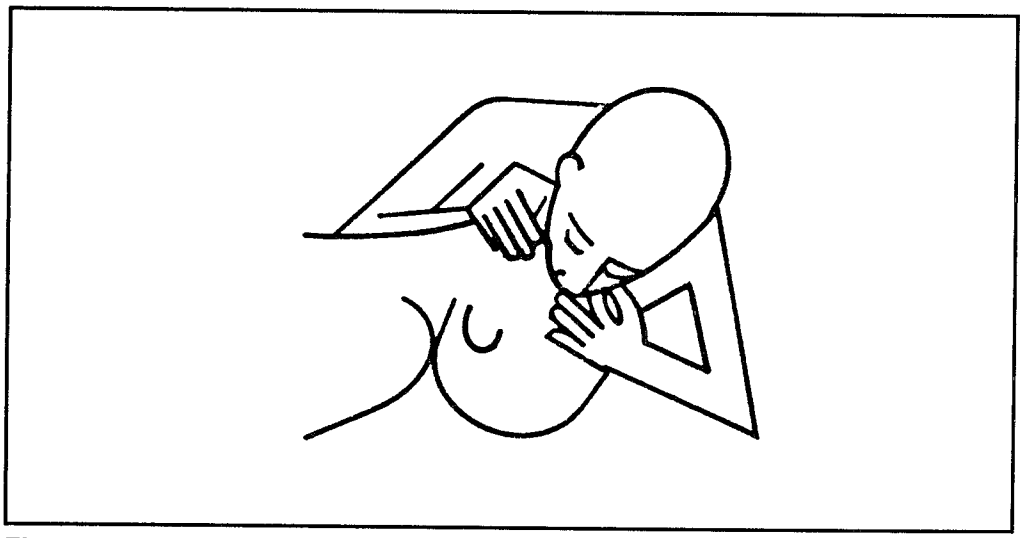

Figure 2: Pinch the nose, create a seal between your mouth and theirs, and blow while watching to see if their chest rises.

If the heart is beating, continue mouth-to-mouth resuscitation at a rate of about 14 times per minute until natural breathing begins again.

When natural breathing has started, put the victim in the recovery position. That is, move the person so that the front of the body is to the ground and the head is resting with the right side to the ground and the chin tilted to keep the airway clear (Figure 5). The right arm should be down and beside the body, with the left arm forward. The left knee should be bent.

Circulation

The most reliable way for an amateur to check the pulse of an unconscious person is as follows:

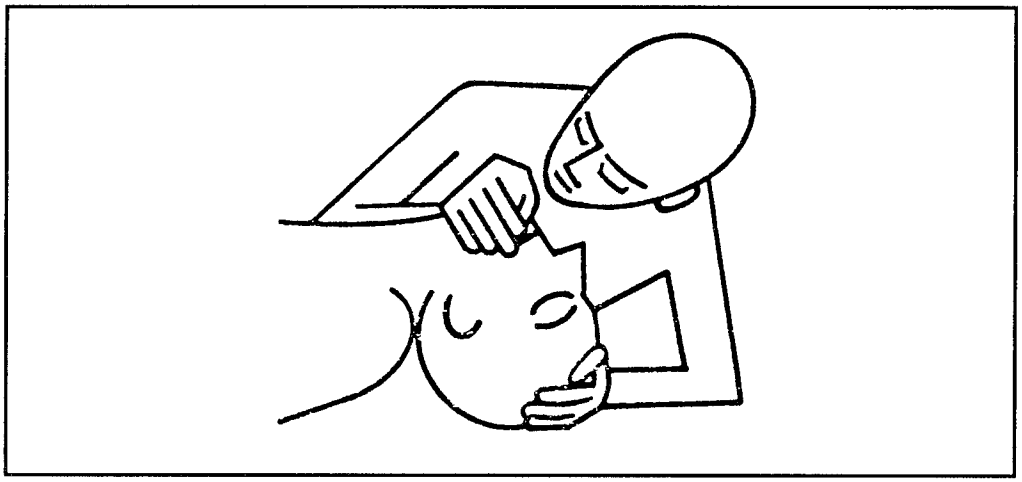

Figure 3: If the chest does not rise and fall, tilt the chin again.

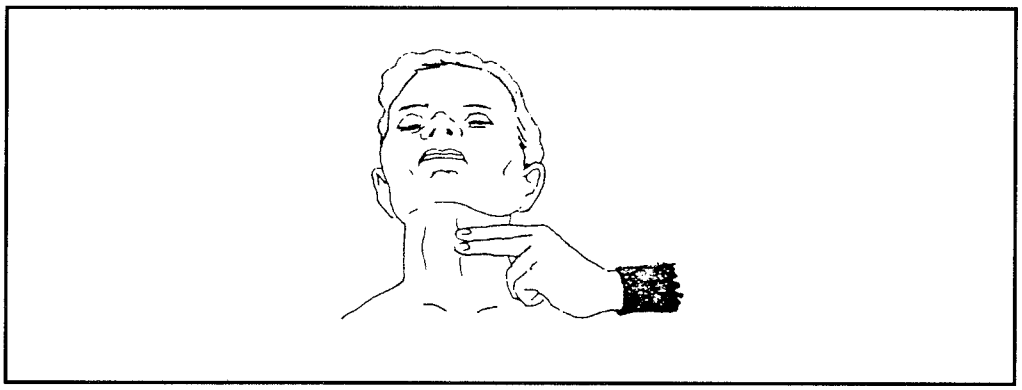

Figure 4: Check the pulse for sign of heartbeat.

Place two fingertips on the voice box (Adam's apple) and slide them around the neck to either side. A pulse should be felt in either of the two carotid arteries that run up the sides of the neck (Figure 4).

The victim must be on his or her back and on a firm surface. Kneel beside the victim and find the point where the ribs join at the bottom of the breastbone. Place the heel of one hand on the breastbone about two finger-widths above this point. (Figure 6.) Put your other hand on top of the first and get into position over the victim with your arms straight and your shoulders directly above the breastbone.

Keeping your arms straight, press down on the breastbone about 2 inches. Relax the pressure and repeat the process at a rate of just over one per second. Don't

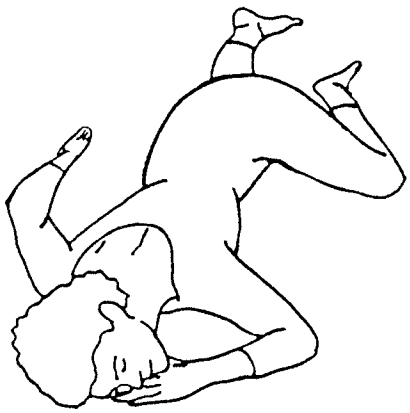

Figure 5: With breathing restored, move the person into the recovery position.

bang on the chest. Try to simulate the smooth, steady action of normal beating. Complete 15 of these actions and then go back to the head, open the airway and give two cycles of mouth-to-mouth resuscitation.

Continue with 15 chest compressions followed by two mouth-to-mouth cycles, checking for a pulse after the first minute and then repeating the entire cycle again, with a pulse check every three minutes.

Stop the chest compressions as soon as a pulse is detected. Continue mouth-to-mouth until natural breathing starts. If necessary, assist with the natural breathing to help the victim return to his or her natural rate.

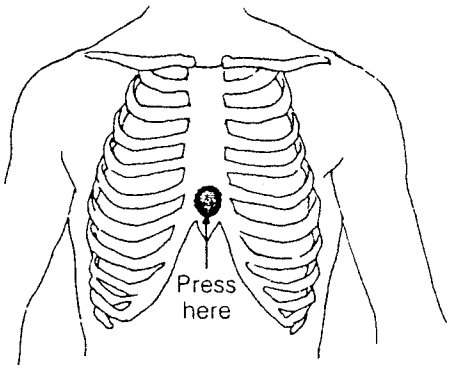

Figure 6: Pushing on the spot shown causes pressure on the heart.

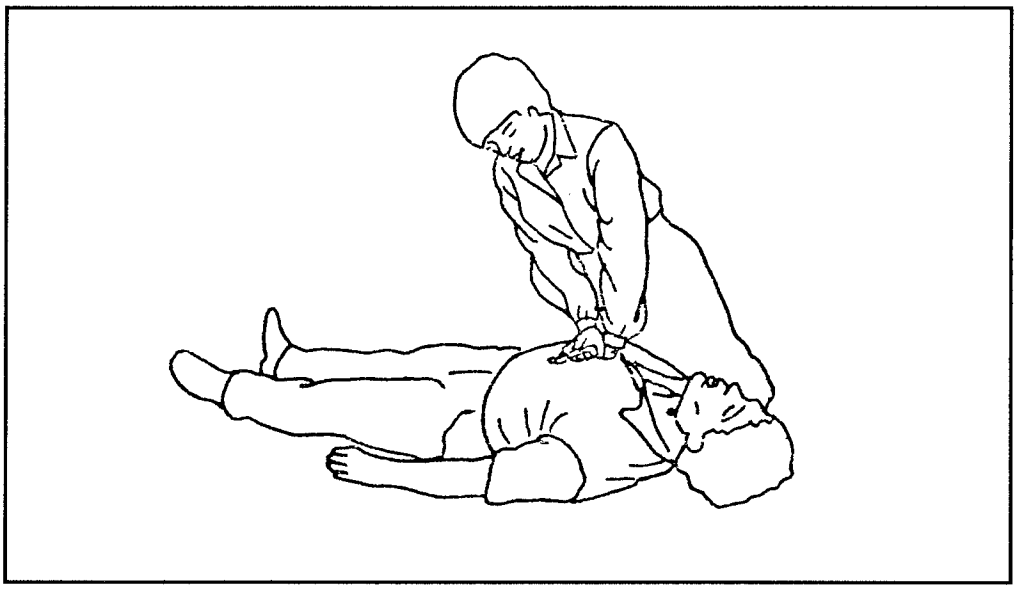

Figure 7: The CPR position.

Table of Contents

Section 3
Electronic Repair Basics

Table of Contents

3/2 *Electronic Fundamentals*

3/2 - C *Components*
3/2 - C - AC *Active Components*
3/2 - C - AC - A *An Introduction*
3/2 - C - AC - IC *Integrated Circuits*
3/2 - C - AC - L *Logic ICs*
3/2 - C - AC - OpAmp *Operational Amplifiers*
3/2 - C - AC - T *Transistors*
3/2 - C - AC - Ti *Timers*
3/2 - C - AC - Tr *Triacs*
3/2 - C - AC - VR *Voltage Regulators*
3/2 - C - PC *Passive Components*
3/2 - C - PC - A *An Introduction*
3/2 - C - PC - C *Capacitors*
3/2 - C - PC - R *Resistors*
3/2 - C - PC - T *Transformers*
3/2 - O *Ohm's Law*
3/2 - PVC *Power, Voltage, Current*
3/2 - QUS *Quantities, Units, Symbols*

3/3 *Troubleshooting Techniques*
3/3 - LLM *Low-Level Measurements*

3/4 *Soldering/Desoldering*

3/4 - D *Desoldering*
3/4 - S *Soldering*

Table of Contents

3/2 - C - AC
Active Components

3/2 - C - AC -A
An Introduction

Passive components "condition" the current but cannot generate or amplify it. Even with a transformer, where there is an apparent increase in power, the increase in the voltage level is accompanied by a decrease in the amperage. In an ideal (theoretical) transformer, the two balance and there is no net gain in power. (In reality there is a net loss.)

Active components can do a variety of things to the current. They can amplify it, modify it in a number of ways and basically make it behave in a desired manner.

Vacuum tubes are active components. However, they have been almost entirely replaced by semi-conductors (diodes, transistors, etc.). Semi-conductors are smaller, lighter, or require less energy to operate and are tougher and more capable. You may encounter tubes in old equipment or in equipment that handles large amounts of power (such as large transmitters). Even here tubes are disappearing, since semi-conductors can handle more power.

3/2
Electronic Fundamentals

3/2 - C	Components
3/2 - C - AC	Active Components
3/2 - C - AC - A	An Introduction

3/2 - C - AC
Active Components

3/2 - C - AC -IC
Integrated Circuits

General Introduction

Transistors were a remarkable invention. Devices could be made much smaller and lighter, and less power was needed to run them. The radio that once filled a large cabinet in the corner of a room, and that required 120 VAC, could be put into a box small enough to fit in a pocket and powered by small batteries. Then came the technology that made it possible to build hundreds or even thousands of transistors, and the related components, into a small, thin plastic case.

This is the integrated circuit (IC), often called a "chip" because of its appearance. In electronics the IC is a mixed blessing. It allows devices to be even smaller, while having more features, and to operate on just a trickle of electrical energy. It also means that repair at the component level is quickly disappearing.

Many ICs are standard and have common pinouts. With the proper manual (such as WEKA's *"The Modern IC Databook"*) you can look up the particular chip to find out which pins carry which signals. This may help you to locate which IC has gone bad—or the failure could be caused by a cascading effect with one chip or component elsewhere causing others to malfunction.

Another problem is that some ICs are proprietary. This means that even if you locate which IC is causing the trouble, you may not be able to get a replacement. The combination of the two often puts the technician in a position in which the "fix" is to replace an entire circuit board - and sometimes the entire device.

How the IC is structured inside, and how it is manufactured, depends on its design and purpose.

Integrated circuits are complex circuits fabricated on a tiny slice of silicon. They may contain the equivalent of as few as 10 or as many as 100,000 active devices (diodes and transistors) and may be divided into two general classes—linear (analog) or digital.

Linear ICs are designed for applications which involve voltage amplification, signal generation and analog signal processing. Typical examples of linear integrated circuits include the vast majority of consumer ICs used in radio, television and hi-fi equipment, and they are also common as operational amplifiers (used in all areas of electronics).

Digital integrated circuits are designed for use in conjunction with digital signals (i.e., the signals consisting of two distinct voltage states, usually known as either high and low, or as logic 1 and logic 0). Typical examples of digital ICs are logic gates, digital counters and shift-registers.

Some integated circuits combine both digital and analog technology. Examples are analog-to-digital converters (ADC) and digital-to-analog converters (DAC), and certain varieties of timer devices. The immensely popular 555 timer, for example, contains two operational amplifier comparators (both considered to be linear devices) together with a bistable stage (a digital device).

ICs are commonly used in almost every branch of electronics. Not only are they the most cost-effective method of realizing many practical circuit configurations, they also offer much greater reliability when compared with the equivalent circuitry based on discrete components.

Scale of Integration

A relative measure of the number of individual semiconductor devices within an intergrated circuit is popularly used to describe the scale of integration achieved within digital devices. The following terminology is often used:

Scale of Integration	Abbr.	Number of logic gates*
Small	SSI	1 to 10
Medium	MSI	10 to 100
Large	LSI	100 to 1000
Very Large	VLSI	1000 to 10,000
Super Large	SLSI	10,000 to 100,000

*or equivalent circuits

Despite their obvious advantages in minimizing the component count within a piece of equipment and reducing the overall area of the PC board required, ICs do have some shortcomings when high currents or high voltages are involved. Devices required to work at an appreciable power level (1 W or more) require heat-sinking. Furthermore, at power levels in excess of 20 W, discrete devices are generally preferred. In high-power audio applications it is, therefore, not unusual to find hybrid circuitry which involves integrated circuit operational amplifiers (operating as voltage amplifiers at low-power levels) working in

conjunction with conventional transistors or MOSFETs (to provide the necessary power gain at the output).

Encapsulation

The most popular form of encapsulation used for ICs is the dual-inline package (DIP). The package itself may be fabricated from either plastic or ceramic material (with the latter using a glass hermetic sealant). Common DIPs have 6, 8, 14, 16, 18, 20, 24 or 40 pins.

Flat package (flatpack) construction (using both glass-metal and glass-ceramic seals and welded construction) are popular for planar mounting on flat circuit boards. No holes are required to accomodate the leads of such devices which are arranged on a 0.05 inch pitch (i.e., half the pitch used with standard DIP devices). This form of casing requires special handling, and repair should not be attempted unless the correct re-working equipment is available.

Single-inline packages (SIPs) and quad-inline packages (QIPs) are also becoming increasingly popular, while TO-5, TO-72, TO-3 and TO-220 casings are also found (the latter being commonly used with voltage regulators).

IC Coding

Once again we find a coding system which demonstrates how our world is becoming smaller. Conventions are almost interchangeable. This is made more complicated by users often reducing the coding of a chip to a few digits (e.g., 386) and more complicated yet because each manufacturer may have its own code for the same IC.

Efforts are being made to reduce this confusion, but it will take a long time. Meanwhile, the technician is once again forced to look through cross-reference manuals (which are fortunately easy to find and constantly updated).

3/2
Electronic Fundamentals

3/2 - C	Components
3/2 - C - AC	Active Components
3/2 - C - AC - IC	Integrated Circuits

3/2 - C - AC
Active Components

3/2 - C - AC - L
Logic ICs

Logic Gates

Basic Function

Logic gates are digital ICs with a wide range of applications in electronics. Logic gates operate using binary signals. Such signals have two states, commonly referred to as logic 0 and logic 1. In conventional (positive) logic, the logic state is represented by a low voltage while the logic 1 is represented by a high voltage. In practice, the voltage levels used to represent the logical states depend on the semiconductor technology employed, as well as the supply voltages. In normal transistor-transistor logic (TTL) the logic 0 condition is represented by a voltage in the range of 0 V to +0.8 V, while the logic 1 condition is represented by a voltage in the range of +2.0 V to +5.0 V.

Logic Families

The logic family to which a device belongs is largely determined by its operational characteristics (such as power consumption, speed, and immunity to noise). The two basic logic families are TTL and CMOS, which are further divided into a number of sub-families based on different manufacturing technologies. TTL logic gates and related digital devices are found in the popular 74-series of ICs. Each device within the family is coded with the prefix 74 and variants within the family are identified by letters which follow the 74 prefix as follows:

Letters	Meaning
none	Standard TTL device
C	CMOS version
F	"Fast" - a high speed version
H	High speed version
L	Low power version
S	Schottky input configuration (improved speed and noise immunity)
AC	High speed, low power
HC	High speed CMOS version (CMOS inputs)
HCT	High speed CMOS version (TTL inputs)
LS	Low power version with Shottky inputs
ALS	Advanced low power version with Schottky inputs

Popular CMOS logic devices form the 4000-series. Variants within the family are identified by suffix letters as follows:

Suffix	Meaning
none	Standard CMOS device
A	Standard unbuffered
B, BE	Improved buffered
UB, UBE	Improved unbuffered

Examples of CMOS and TTL device coding are given below:

Code	Meaning
4001UBE	an improved, unbuffered version of the CMOS 4001
74LS14	low power veriosn of the TTL 7414, fitted withSchottky inputs
4069B	a buffered version of the standard 4069
74HC259	a high speed CMOS version of the 74259 TTL device

Logical Functions and Truth Tables

A logic gate generally has one or more inputs and a single output. Its logical function is described by the logical condition which relates its output to the input(s). Several functions are commonly encountered including AND, NAND, OR and NOR.

The logical function of a gate is specified in terms of a truth table that relates the logical state of its output to every possible combination of input. Since a digital signal can have two states (0 or 1) a gate with two inputs can have, for example, four different combinations of input (0 and 0, 0 and 1, 1 and 0, and 1 and 1). A gate with three inputs can have eight possible input combinations, and so on.

The American Standard (MIL/ANSI) symbols for some basic logic gates are shown with their truth tables in Figure 3 to 7. Inverters and buffers each have one input, exclusive-OR gates have two inputs and other basic gates (AND, OR, NAND and NOR) are available with up to eight inputs.

Buffers

Buffers do not affect the logical state of a digital signal. That is, a logic 1 input results in a logic 1 output whereas a logic 0 input results in a logic 0 output. Buffers are normally used to provide extra current drive at the output but can also be used to regulate the logic levels present at an interface. The symbol and truth table for a buffer is shown in Figure 1.

Inverters

Inverters are used to complement the logical state. That is, a logic 1 input results in a logic 0 output and vice versa. Inverters also provide extra current drive and, like buffers, are used in interfacing applications.

X	Y
0	0
1	1

Figure 1: Symbol and truth table for a buffer

The symbol and truth table for an inverter is shown in Figure 2.

AND Gates

AND gates produce a logic 1 output when all inputs are simultaneously at logic 1. Any other input combination results in a logic 0 output. The symbol and truth table for an AND gate is shown in Figure 3.

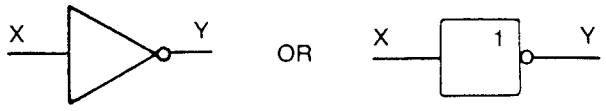

X	Y
0	1
1	0

Figure 2: Symbol and truth table for an inverter

OR Gates

OR gates produce a logic 1 output whenever any one (or more) input is at logic 1. The OR gate produces a logic 0 output only when all of its inputs are simultaneously at logic 0. The symbol and truth table for an OR gate is shown in Figure 4.

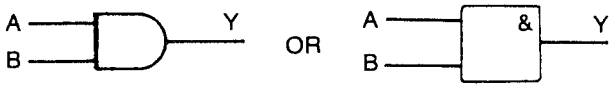

A	B	Y
0	0	0
0	1	0
1	0	0
1	1	1

Figure 3: Symbol and truth table for an AND gate

NAND Gates

NAND gates produce a logic 0 output only when all inputs are simultaneously at logic 1. Any other combination produces a logic 1 output. A NAND gate, therefore, is an AND gate with its output inverted. The symbol and truth table for a NAND gate is shown in Figure 5.

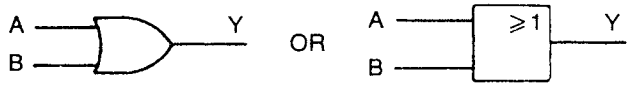

A	B	Y
0	0	0
0	1	1
1	0	1
1	1	1

Figure 4: Symbol and truth table for an OR gate

NOR Gates

NOR gates produce a logic 1 output when all inputs are simultaneously at logic 0. Any other combination produces a logic 0 output. A NOR gate, therefore, is an OR gate with its output inverted. The symbol and truth table for a NOR gate is shown in Figure 6.

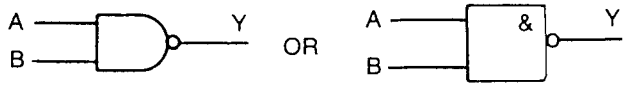

A	B	Y
0	0	1
0	1	1
1	0	1
1	1	0

Figure 5: Symbol and truth table for a NAND gate

Exclusive OR Gates

Exclusive-OR gates produce a logic 1 output when one of the inputs is at logic 1 and the other is at logic 0. Exclusive-OR gates produce a logic 0 whenever both inputs have the same logical state. The symbol and truth table is shown in Figure 7.

Monostables

Basic Function

A logic device which has only one stable output state is known as a monostable. The output of such a device is initially at logic 0 (low) until an appropriate level

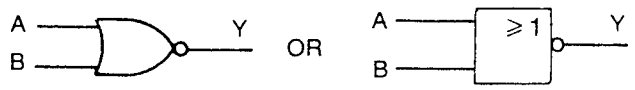

A	B	Y
0	0	1
0	1	0
1	0	0
1	1	0

Figure 6: Symbol and truth table for a NOR gate

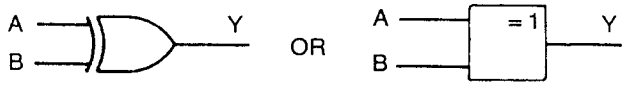

A	B	Y
0	0	0
0	1	1
1	0	1
1	1	0

Figure 7: Symbol and truth table for an Exclusive-OR gate

change occurs at its trigger input. This level change can be from 0 to 1 (positive edge trigger) or (negative edge trigger) depending on the particular monostable device or configuration.

Upon receipt of a valid trigger pulse, the output of the monostable changes state to logic 1. Then, after a time interval determined by external C-R timing components, the output reverts to logic 0. The device then awaits the arrival of the next trigger.

Example

The most common example of a TTL monostable device is the 74121. This device can be triggered by either positive or negative edges depending upon the configuration employed. The chip has complementary outputs (Q and Q) and requires only two timing components (one resistor and one capacitor).

Control Inputs

Control inputs A1, A2 and B are used to determine the trigger mode and may be connected in any one of the following three ways:

- A1 and A2 connected to logic 0. The monostable then triggers on a negative edge to B.

- A1 and B connected to logic 1. The monostable then triggers on a negative edge applied to A2.
- A2 and B connected to logic 1. The monostable then triggers on a negative edge applied to A1.

Unlike some other astable types, the 74121 is not re-triggerable during its monostable timing period. This simply means that once a timing period has been started, no further trigger pulse is recognized. In normal use, a recovery time equal in length to the monstable pulse should be allowed before attempting to re-trigger the device.

Usage

Monostable devices are often used for stretching pulses of very short duration. A 74121 is an ideal device to perform this function. It is be triggered by a very short duration pulse and continues its timing period long after the input signal has reverted to its original state. The only requirement is that, to ensure reliable triggering, the input pulse should have a width of at least of 50 ns.

Circuit Arrangements

In most practical circuit arrangements (see Figure 8) the values of the external timing resistor should normally lie in the range of 1.5 kΩ to 47 kΩ. The minimum recommended value of external capacitor is 10 pF, with the maximum value limited only by the leakage current of the capacitor employed. (In practice, values of several hundred μF are found.)

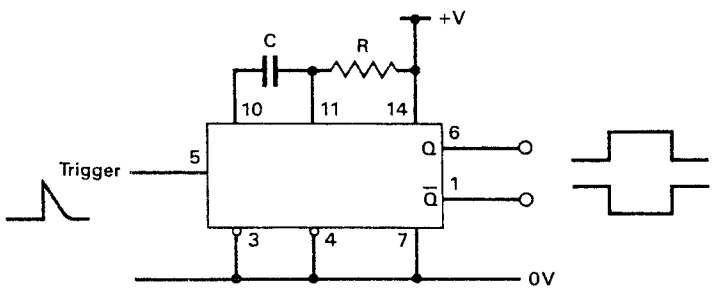

Figure 8: Monostable arrangement based on the 7412

Bistables

The output of a bistable can remain indefinitely in either logical state (0 or 1). Once set, the output will remain the same until reset.

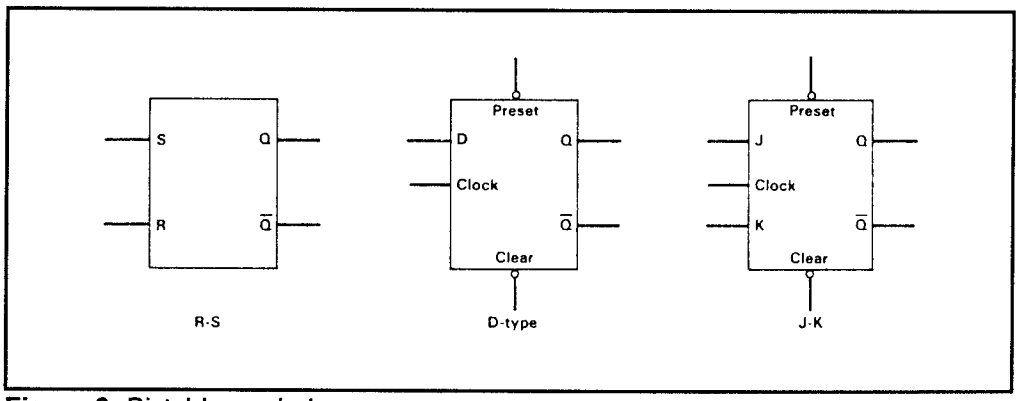

Figure 9: Bistable symbols

Various forms of bistables are found (see Figure 9).

R-S Bistables

The simplest form of bistable is the R-S bistable. This device has two inputs, SET and RESET, with complementary outputs Q and $\overline{Q}$. A logic 1 applied to the SET input causes the Q output to become (or remain at) logic 1, while a logic 1 applied to RESET causes the Q output to become (or remain at) logic 0. In either case, the bistable remains in its set or reset state until an input is applied in a way that changes the logical state.

R-S bistables are sometimes implemented using cross-coupled NAND and NOR gates as shown in Figure 10. These arrangements are, however, unreliable as the output state is indeterminate when S and R are simultaneously at logic 1.

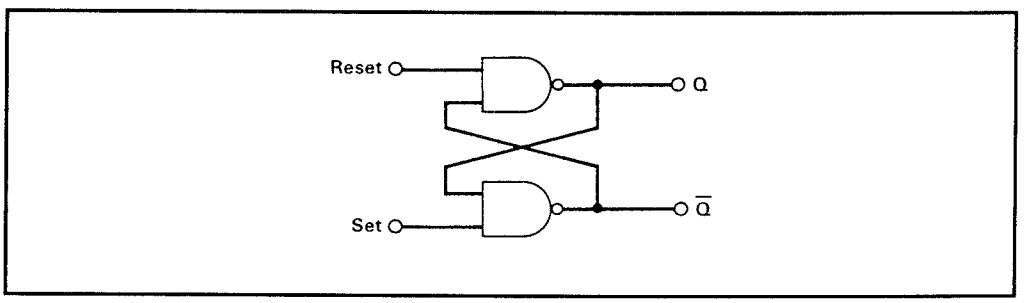

Figure 10: Cross-coupled NAND gate bistable

D-Type Bistables

The D-type bistable has two principal inputs—D (data or delay) and CLOCK (CK). The data input (logic 0 or 1) is clocked into the bistable such that the output state only changes when the clock changes state. Operation is thus said to be synchronous. Additional subsidiary inputs (which are invariably active low) are provided which can be used to directly set or reset the bistable. These are usually called $\overline{\text{PRESET}}$ ($\overline{\text{PR}}$) and $\overline{\text{CLEAR}}$ ($\overline{\text{CLR}}$). D-type bistables are used both as latches (a simple form of memory) and as binary dividers.

J-K Bistables

J-K bistables have two clocked inputs (J and K), two direct inputs ($\overline{\text{PRESET}}$ and $\overline{\text{CLEAR}}$), a CLOCK (CK) input, and outputs Q and $\overline{\text{Q}}$. As with R-S bistables, the two outputs are complementary. That is, when one is 0 the other is 1 and vice versa. Similarly, the $\overline{\text{PRESET}}$ and $\overline{\text{CLEAR}}$ inputs are both active low (i.e., a 0 on the $\overline{\text{PRESET}}$ input sets the Q output to 1, whereas a 0 on the $\overline{\text{CLEAR}}$ input will set the Q ouput to 0).

J-K bistables are the most sophisticated and flexible bistables, and they can be configured as binary dividers, shift registers and latches.

Logical Levels and Noise Margins

Logic levels are the range of voltages used to represent the logic states 0 and 1. The logic levels for CMOS differ markedly from those associated with TTL.

In particular, CMOS logic levels are relative to the supply voltage used while the logic levels associated with TTL devices tend to be absolute (as shown in the following table).

Logic Levels

	CMOS	TTL
Logic 1	more than 2/3 V_{DD}	more than 2V
Logic 2	less than 1/3 V_{DD}	less than 0.8V
Indeterminate	between 1/3 V_{DD} and 2/3 V_{DD}	and between 0.8V and 2V

(Note: V_{DD} is the positive supply associated with CMOS devices.)

Noise Margin

The noise margin of a logic device is a measure of its ability to reject noise. The larger the noise margin the better the ability to perform in a noisy environment. Noise margin is defined as the difference between the minimum values of high state output and high state input voltage, and the maximum values of low state output and low state input.

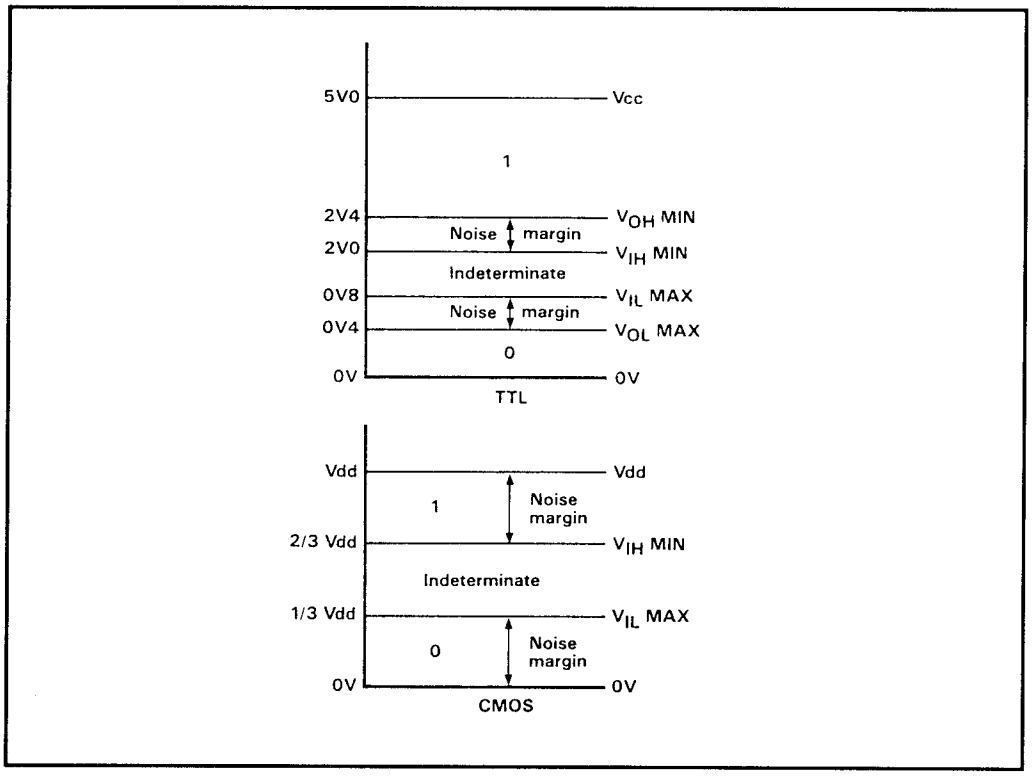

Figure 11: Logic levels and noise margins for CMOS and TTL Devices

$$\text{Noise margin} = V_{OH(MIN)} - V_{IH(MIN)}$$
$$\text{Noise margin} = V_{OL(MAX)} - V_{IL(MAX)}$$

That is where $V_{OH(MIN)}$ is the minimum value of high state (logic 1) output voltage, $V_{IH(MIN)}$ is the minimum value of high state (logic 1) input voltage, $V_{OL(MAX)}$ is the maximum value of low state (logic 0) output voltage, and $V_{IL(MAX)}$ is the maximum value of low state (logic 0) input voltage.

The noise margin for standard 7400 series TTLs is typically 400 mV while that for CMOS is 1/3 V_{DD}, as shown in Figure 11.

Bus Compatible Devices

Microprocessor bus compatible digital integrated circuits invariably have tri-state outputs. These outputs can be placed in a high impedance state (i.e., are effectively disconnected) in order to avoid bus conflicts that may occur when

several logic devices attempt to simultaneously drive the bus. Such devices have a control input called ENABLE (EN) or CHIP SELECT (CS) which allows the device to drive the bus. Such an input may be active high (the output of the gate is valid when the enable or chip select input is taken to logic 1) or active low (the output of the gate is valid when the enable or chip select is taken to logic 0). A small circle is often used to denote an active low enable or chip select input on the device symbol.

Fan-in and Fan-out

The fan-in of a TTL logic circuit is a measure of the loading effect of its inputs in comparison with a standard TTL gate. A TTL device with a fan-in of two has inputs which are each equivalent to two standard TTL input loads. The fan-out of a logic gate is a measure of its ability to drive further inputs. A TTL device with a fan-out of two is capable of driving two standard TTL input loads. Clearly, at any node in a digital logic circuit, the fan-out of the driving stage must always be greater than, or equal to, the total fan-in of the following stages. For this reason it is essential to ensure that a replacement device has the same (or improved) fan-out.

Supply Voltages

Most TTL and CMOS logic systems are signed to operate from a single supply voltage rail of nominally +5 V. With TTL devices, this supply rail is invariably regulated. In most cases, the supply voltage should not fall outside the range of 4.75 V to 5.25 V.

CMOS devices can operate over a much wider range of supply voltages (3 V to 15 V), however, when operating at reduced supply voltages it is important to note that the propagation delay (the time taken for a change of state to appear at the output in response to a change at the input) is significantly increased. In order to maintain performance at high switching speeds, it is important to use a relatively high value of supply voltage. This explains why CMOS-based equipment sometimes fails to perform to specification when the supply voltage is, for some reason, lower than normal. CMOS devices generally consume significantly less power than their TTL counterparts. Power consumption for CMOS devices tends to be proportional to switching speeds, whereas for TTL it tends to remain constant. At speeds in excess of several MHz, power consumption may approach, or even exceed, that of a comparable TTL device. Early CMOS devices were easily damaged by stray static charges and required careful handling, particularly during soldering and de-soldering. While modern CMOS devices are fitted with input static protection diodes, care must still be taken.

The absolute maximum supply voltage for TTL devices is nominally 7 V. If the supply voltage ever exceeds this value, any TTL devices connected to the supply are liable to destruct very quickly.

3/2 - C - AC
Active Components

3/2 - C - AC -OpAmp
Operational Amplifiers

Basic Function

Operational amplifiers (op-amps) are general purpose integrated circuits with a wide variety of applications. Operational amplifiers can be considered to offer a "block of gain". As amplifiers they possess near-ideal characteristics (virtually infinite voltage gain and input resistance together with low output resistance and wide bandwidth). The following terminology is applied to operational amplifiers.

Open-loop Voltage Gain

This is the ratio of output voltage to input voltage measured without feedback applied. The open-loop voltage gain is given by:

$$A_{VOL} = V_{OUT}/V_{IN}$$

where A_{VOL} is the open-loop voltage gain, V_{OUT} and V_{IN} are the output and input voltages repectively under open-loop conditions. In linear voltage amplifying applications, a large amount of negative feedback is normally applied and the open-loop voltage gain can be thought of as the internal voltage gain provided by the device.

The open-loop voltage gain is sometimes expressed in decibels (dB) rather than as a ratio. In this case:

$$A_{VOL} = 20 \log_{10} (V_{OUT}/V_{IN})$$

Closed-loop Voltage Gain

This is the ratio of output voltage to input voltage when negative feedback is applied.

$$A_{VCL} = V_{OUT}/V_{IN}$$

where A_{VCL} is the closed-loop voltage gain, V_{OUT} and V_{IN} are output and and input voltages respectively under closed-loop conditions. The closed-loop voltage gain is normally very much less than the open-loop voltage gain.

Input Resistance

The input resistance is simply the ratio of input voltage to input current:

$$R_{IN} = V_{IN}/I_{IN}$$

where R_{IN} is the input resistance, V_{IN} is the input voltage and I_{IN} is the input current. Note that the input of an operational amplifier is normally assumed to be purely resistive, though this may not be the case at high frequencies where shunt capacitance may be present.

The input resistance of operational amplifiers is very much dependent on the semiconductor technology employed. In practice, values range from about 2 MΩ for bipolar operational amplifiers to over 1012 Ω for CMOS devices.

Output Resistance

The output resistance is the ratio of open-circuit output voltage to short-circuit output current

$$R_{OUT} = V_{OUT(OC)}/I_{OUT(SC)}$$

where R_{OUT} is the output resistance, $V_{OUT(OC)}$ is the output voltage and $I_{OUT(SC)}$ is the output current.

Input Offset Voltage

The input offset voltage is the voltage which when applied at the input provides an output voltage of exactly zero. Similarly, the input offset current is the current which, when applied at the input, provides an output current of exactly zero. (Note that due to imperfect balance and very high internal gain, a small output voltage may appear with no input present.)

Offset may be minimized by applying large amounts of negative feedback or by using the offset null facility provided by certain types of op-amps (Figure 1).

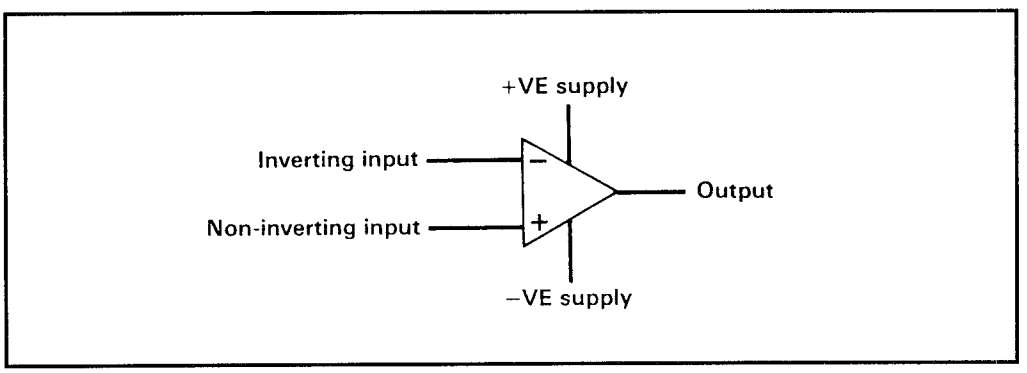

Figure 1: Operational amplifier symbol

Slew-rate

The slew-rate of an operational amplifier is the rate of change of output voltage with time in response to a perfect step-function input. The formula is:

$$\text{Slew-rate} = \Delta V_{OUT}/\Delta t$$

where ΔV_{OUT} is the change in output voltage and Δt is the corresponding interval of time.

Common-Mode Rejection Ratio (CMRR)

This is the ratio of differential voltage gain to common-mode voltage gain (usually expressed in dB):

$$\text{CMRR} = 20 \log_{10} A_{VOL(DM)}/A_{VOL(CM)}$$

where $A_{VOL(DM)}$ is the voltage gain in differential mode (equal to A_{VOL} and $A_{VOL(CM)}$ is the open-loop voltage gain in common-mode (i.e., signals applied with both inputs connected together). CMRR is a measure of an operational amplifier's ability to reject signals (e.g. noise) which are simultaneously present on both inputs.

Maximum Output Voltage Swing

This is the maximum range of output voltages that the device can produce without clipping. The maximum output voltage swing is dependent on the positive and negative supply voltages.

Bandwidth

The bandwidth of an operational amplifier is the range of frequencies over which the device is able to provide its rated gain. Bandwidth is closely related to slew-rate in that the greater the slew-rate, the wider the bandwidth.

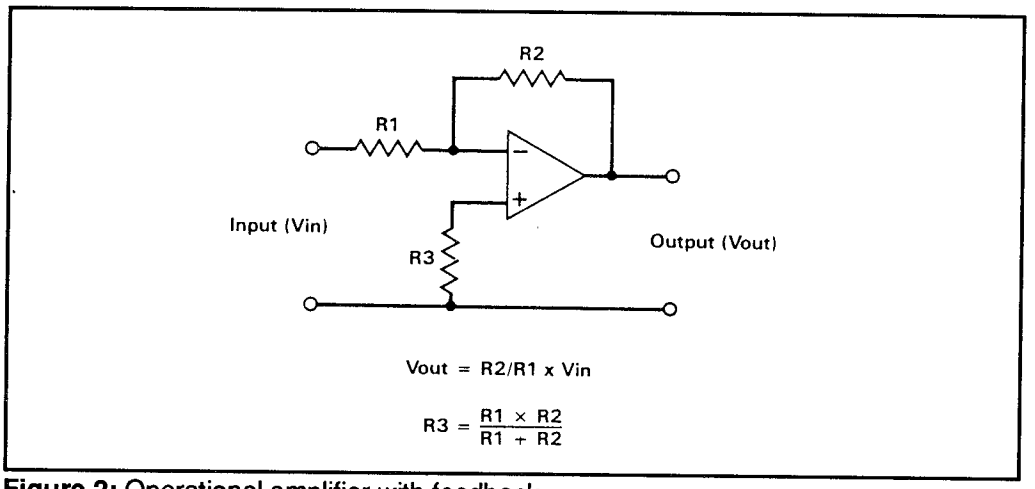

Figure 2: Operational amplifier with feedback

Modern operational amplifiers exhibit very high open-loop voltage gains (e.g., 100,000) coupled with very high input resistances (e.g., 2 MΩ). The output resistance of a low-power operational amplifier is usually in the region of 20 Ω to 100 Ω while that for a high-power device may be as low as 2 Ω.

Operational amplifiers are packaged singly, in pairs (dual types) or in fours (quad types). The 081, for example, is a single general purpose BIFET operational amplifier which is also available in dual (082) and quad (084) forms.
Op-amps are available in standard bipolar, CMOS and FET technologies. Certain characteristics, such as input resistance, depend on the semiconductor technology used. FET devices, for example, exhibit input resistances which are much larger than their bipolar counterparts.

It is essential that anti-static precautions are observed when handling CMOS and FET input operational amplifiers.

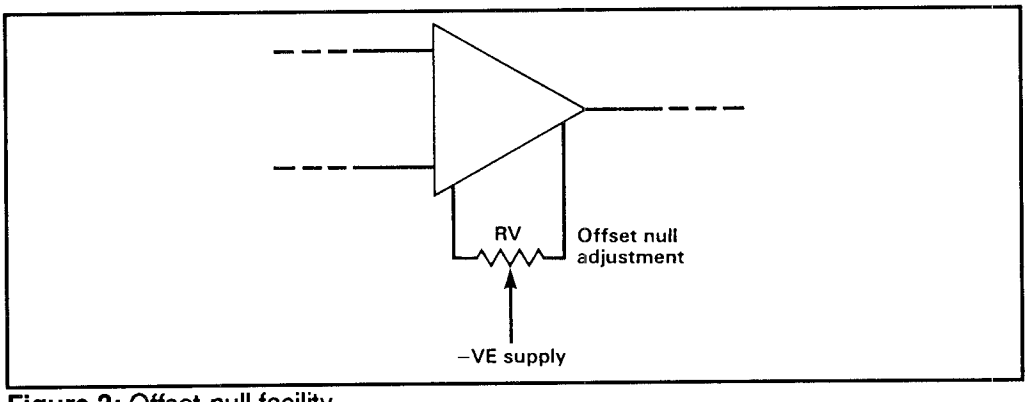

Figure 3: Offset-null facility

3/2 - C - AC
Active Components

3/2 - C - AC -T
Transistors

An easy way to understand what a transistor is and does is to imagine two diodes connected back-to-back or front-to-front.

Bipolar Transistors Bipolar transistors generally comprise P-N-P or N-P-N junctions of either silicon (Si) or germanium (Ge). In either case the electrodes are labeled collector, base and emitter (Figure 2). Silicon transistors are superior when compared with germanium transistors in the vast majority of applications (particularly at high temperatures) and thus germanium devices are very rarely encountered in modern equipment.

Each junction within the transistor, whether it be collector-base or base-emitter, constitutes a P-N junction diode. The base region is, however, made very narrow so that carriers are swept across and a relatively smally current flows in the base. The current flowing in the emitter circuit is often 100 or more times greater than that flowing in the base. The direction of current flow is from emitter to collector in the case of a PNP transistor, and collector to emitter in the case of an NPN transistor.

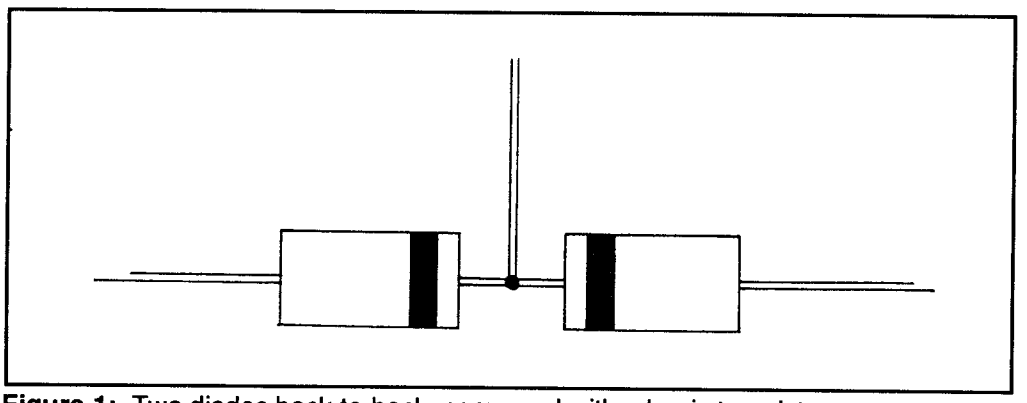

Figure 1: Two diodes back-to-back, compared with a basic transistor

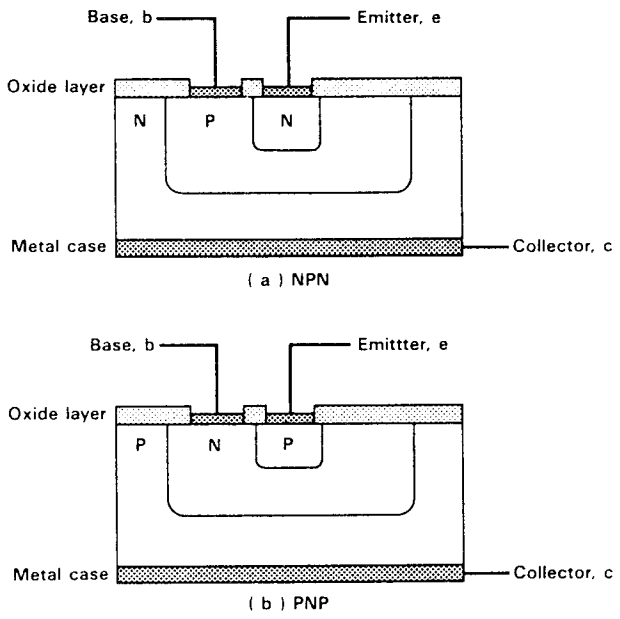

Figure 2: NPN and PNP transistors

The equation which relates current flow in the collector, base and emitter currents is:

$$I_E = I_B + I_C$$

where I_E is the emitter current, I_B is the base current and I_C is the collector current.

In transistor circuits designed to provide linear amplification (e.g., AF amplifiers or preamplifiers) a static bias curent is applied to the transistor in order to obtain satisfactory operation. This bias is usually applied to the base by means of a single resistor or a potential divider. The base current sets up a corresponding standing current (quiescent current) in the collector circuit. When a signal is applied, this current varies above and below its standing value.

When base current is applied to the transistor, the voltage developed across a forward biased base-emitter junction of a silicon transistor is the same as that

associated with a forward biased diode of the same material. Thus the base-emitter voltage drop for a silicon transistor is in the region of 0.6 V while that for a germanium device is 0.1 V or so. In the case of an NPN device, the base and collector will be positive with respect to the emitter, while for a PNP device the base and collector are negative with respect to the emitter (see Figure 3).

The current gain offered by a transistor is a measure of its effectiveness as an amplifying device. The most commonly quoted parameter is that which relates to common emitter mode. In this mode, the input current is applied to the base and the output currect appears in the collector. The emitter is effectively common to both the input and output circuits.

The large-signal (DC) current gain in common emitter mode is thus given by:

$$h_{fe} = I_C/I_B$$

where h_{fe} is the hybrid parameter which represents large-signal (DC) forward current gain in the common emitter mode, I_C is the collector current, and I_B is the base current. When small, rather than large, signal operation is considered, the values of I_C and I_B are incremental (i.e., small changes rather than static values).

The small-signal (AC) current gain is then given by:

$$h_{fe} = I_C/I_B$$

where h_{fe} is the hybrid parameter which represents small-signal (AC) forward current gain, I_C is the change in collector current which results from a corresponding change in the base current, I_B.

Typical Values

Typical values of common emitter current gain (h_{fe}) are in the region of 50 to 250.

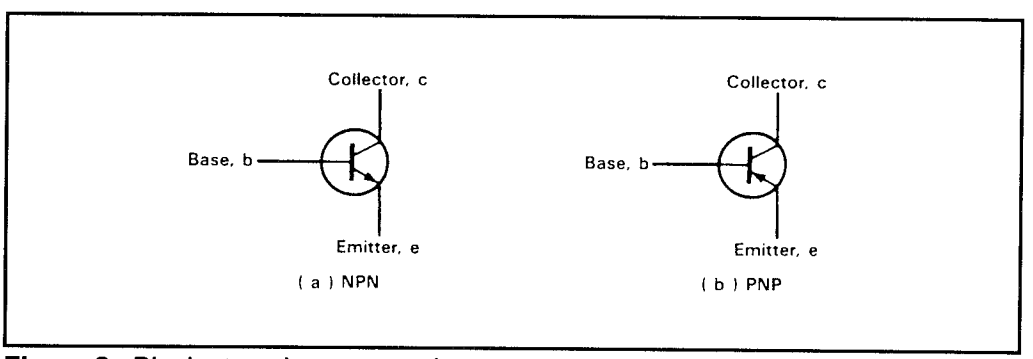

Figure 3: Bipolar transistor connections

Compound Darlington transistors (see Figure 4) are a special form of dual-transistor in which a very high value of forward current gain (typically several thousand) is achieved. Such transistors are often used in the output stages of amplifiers where the high value of h_{fe} can be used to achieve a very high power gain. Apart from h_{fe}, other parameters normally quoted by manufacturers often include:

Parameter	Meaning
I_C max.	Maximum value of collector current.
V_{CEO} max.	Maximum value of collector-emitter voltage with the base terminal left open-circuit.
V_{CBO} max.	Maximum value of collector-base voltage with the base terminal left open-circuit.
P_T max.	Maximum power dissipation.
f_T typ.	Transition frequency (i.e., the frequency at which the small signal common-emitter current gain falls to unity.)

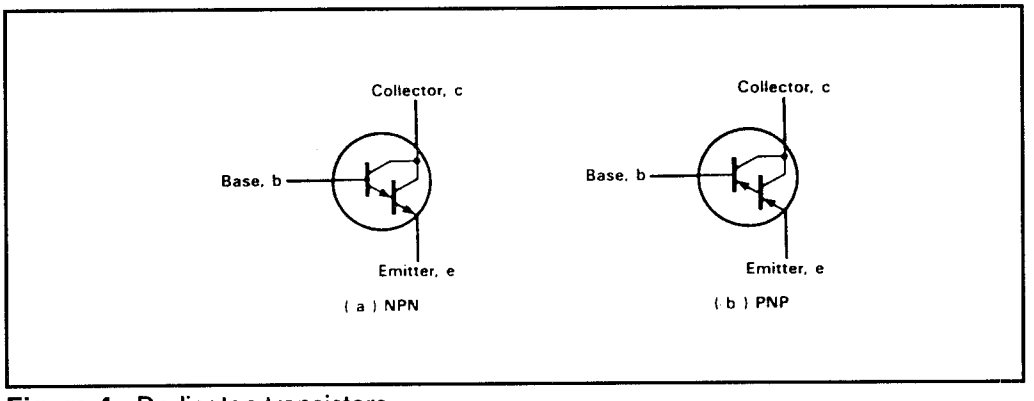

Figure 4: Darlington transistors

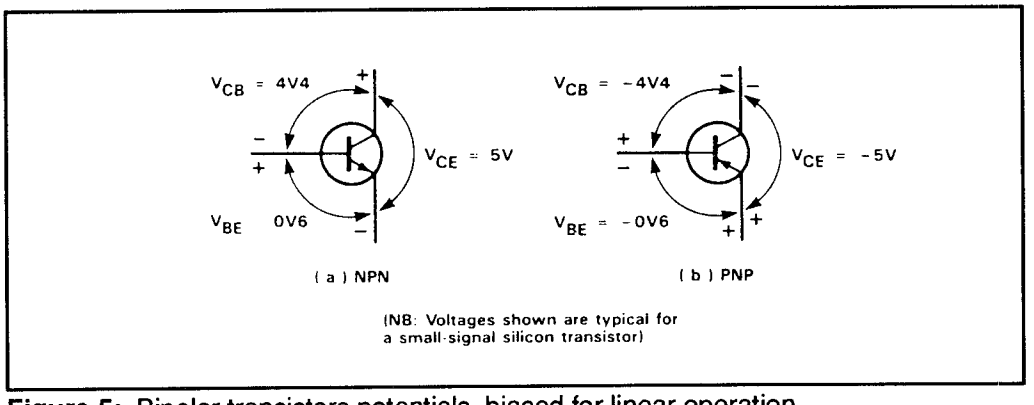

Figure 5: Bipolar transistors potentials, biased for linear operation

Transistor Coding

Transistors serve a number of functions and applications. Among these are:

Linear	such as precision voltage or current amplification;
Switching	provides an on or off state;
Power	general amplification, such as for audio or RF;
High-frequency	handling and/or amplifying RF at 100 Hz and above;
Low-frequency	handling and/or amplifying audio signals (below 100 Hz, and often below 50 Hz)
Low noise	used in situations in which distortion must be minimal;
High voltage	used in situations in which high voltage will be present.

As with diodes, several conventions may be used when coding (labeling) transistors. The European system again uses more letters. For example, the British BC140 is the American 2N3109 (which is the same as the 2N3036).

Once again, cross referencing is often necessary, even within a particular system. These guides are available at parts suppliers, through Motorola and even across computers (as above).

FET Transistors

Field effect transistors (FETs) are made up of a channel of P or N type material surrounded by material of the opposite polarity. The ends of the channel (in which conduction takes place) form electrodes known as the source and drain. The effective width of the channel is controlled by a charge placed on the third (gate) electrode. The effective resistance between the source and drain is thus determined by the voltage present at the gate.

Field effect transistors are available in two basic forms; junction gate and insulated gate. The gate-source junction of a junction gate field effect transistor (JFET) is effectively a reverse-biased P-N junction. On the other hand, the gate connection of an insulated gate field effect transistor (IGFET) is insulated from the channel and charge is capacitively coupled to the channel. IGFETs use either metal on silicon (MOS) or silicon on sapphire (SOS) technology.

JFET devices are less noisy and more stable than comparable IGFET devices. JFET devices offer source input impedance of around 100 MΩ compared with the 10,000 MΩ for comparable IGFETs. Note that FET devices offer very much higher input impedances (at the source) than bipolar transistors (at the base). IGFET devices generally offer improved switching characteristics as they

combine low drain-source resistance in the on-state with very high drain-source resistance in the off-state.

IGFETs may be designed for either depletion mode or enhancement mode operation. In the former case, conduction occurs within the channel even when the gate-source voltage (VGS) is zero. In the latter case, a gate-source bias voltage must be applied in order to obtain conduction within the channel. Symbols and connections for various types of JFET and IGFET are depicted in Figure 6.

Linear FET circuits require the application of a bias voltage between the gate and source. The method of applying the bias voltage differs according to the mode of operation (depletion or enhancement). In either case a standing (quiescent) value of drain current results. Typical values of gate-source bias voltage are in the region of -2.5 V and +2.5 V, according to the mode of operation.

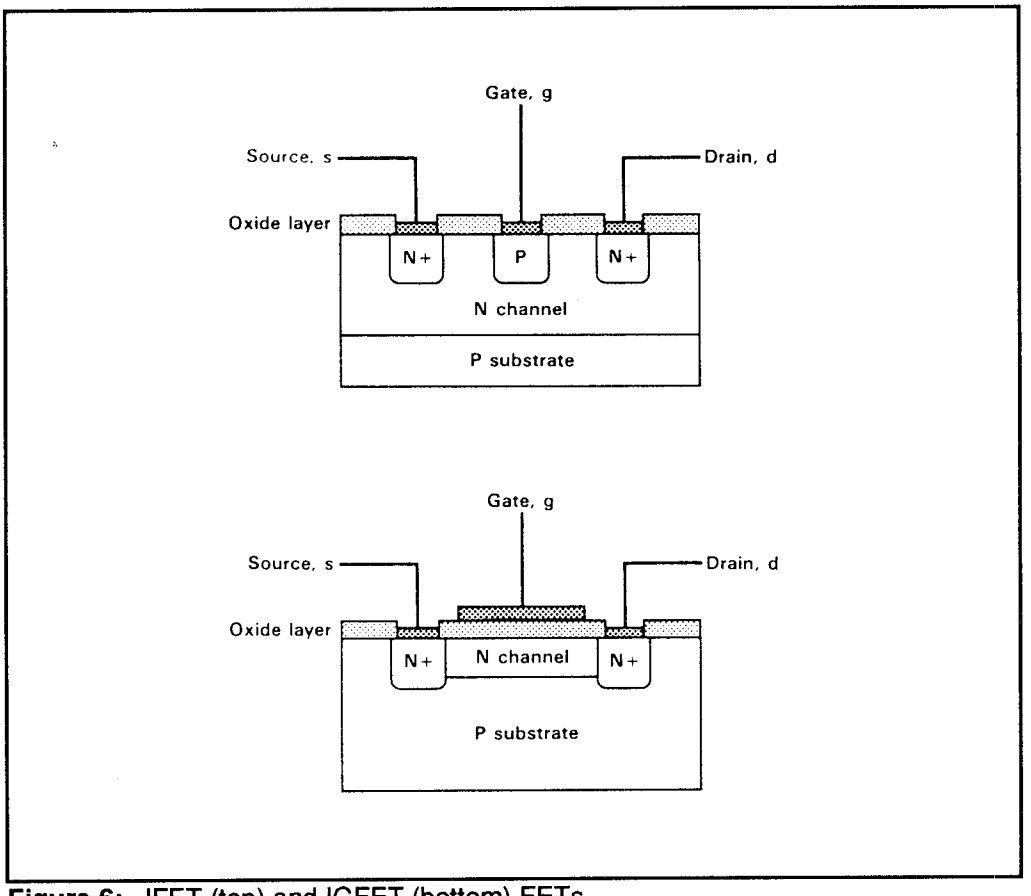

Figure 6: JFET (top) and IGFET (bottom) FETs

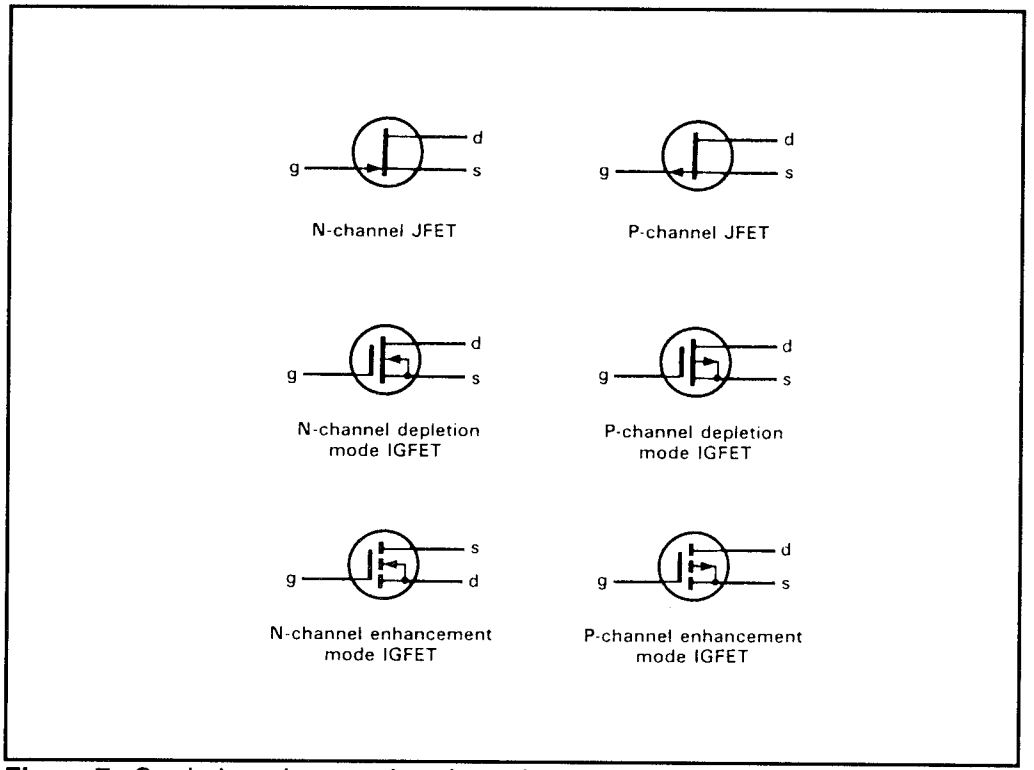

Figure 7: Symbols and connections for various types of FET

FET Parameters

The gain offered by a field effect transistor is normally expressed in terms of its forward transfer conductance (g_{fs} or Y_{fs}) in common source mode. In this mode, the input voltage is applied to the gate and the output current appears in the drain, with the source being effectively common to both the input and output circuits. The units of forward transfer conductance are Siemen (S). Other parameters normally quoted by manufacturers include:

Parameter	Meaning
I_D max.	Maximum value of drain current.
V_{DS} max.	Maximum value of drain-source voltage.
V_{GS} max.	Maximum value of gate-source voltage.
P_D	Maximum value of drain power dissipation.
t_r typ.	Typical value of output rise-time (in response to a perfect rectangular pulse input).
t_f typ.	Typical value of output fall-time (in response to a perfect rectangular pulse input).
$R_{DS(on)}$ max.	Maximum value of resistance between drain and source when the transistor is in the conducting state (on).

Warning

Care should be taken when handling and soldering FET devices, they can be easily damaged by stray static charges. MOSFET devices are particularly prone to static damage and should be handled with extreme care.

3/2 - C - AC
Active Components

3/2 - C - AC - Ti
Timers

Basic Function

Integrated circuit timers are used in a wide variety of pulse generating applications in almost every branch of electronics. The generic timer is the 555 device. This versatile IC is based on a neat hybrid arrangement of analog and digital circuitry (see Figure 1). The 555 comprises two operational amplifiers (used as comparators) together with an RS bistable element. In addition, inverting output buffer is incorporated so that a considerable current can be sourced to, or sunk from, a load. A single transistor switch (TR1) discharges the external timing capacitor. The standard 555 timer is housed in an 8-pin DIP with the pin connections shown in Figure 2. The device operates on supply voltages between 4.5 V and 15 V.

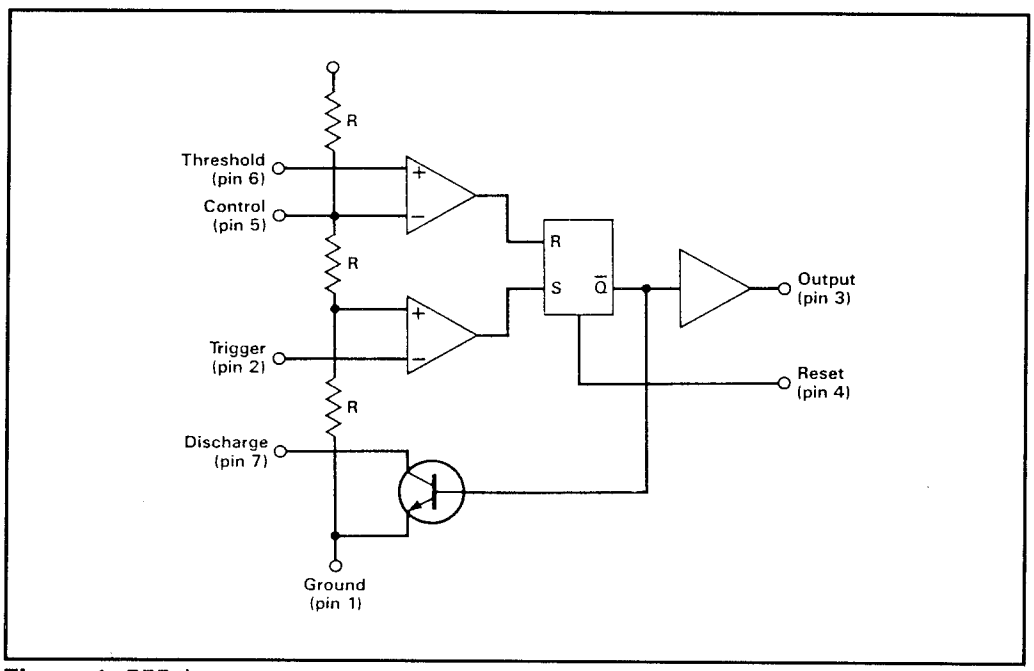

Figure 1: 555 timer

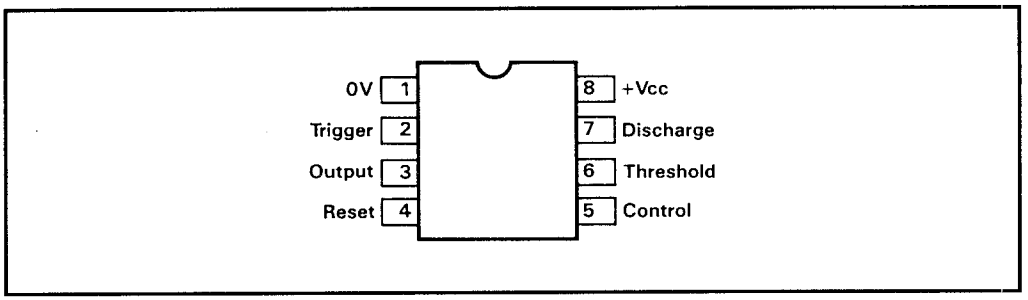

Figure 2: 555 timer pin connections

Variants of the 555 are also available. The 556 is a dual 555 device in a 14-pin DIP comprised of two identical independent 555 timers. The pin connections for the 556 are shown in Figure 3. The 555 uses CMOS technology and thus demands on the power supply are minimal.

Low-power 555s, such as the ICM7555IPD or the TLC555, are also available. Dual versions of this are the ICM7556IPD and TLC556. These variants employ the same pin connections as their bipolar counterparts.

Timers are used in either astable mode (to generate a continuous pulse train) or in monostable mode (to generate a single pulse of accurately defined length). In astable mode, the range of obtainable pulse repetition frequencies (prf) extends from less than 0.1 Hz (ten seconds per cycle) to over 100 kHz. In monostable modes, pulse durations range from 10 µs to 10 s. Accuracy is determined primarily by the external timing components (capacitors and resistors).

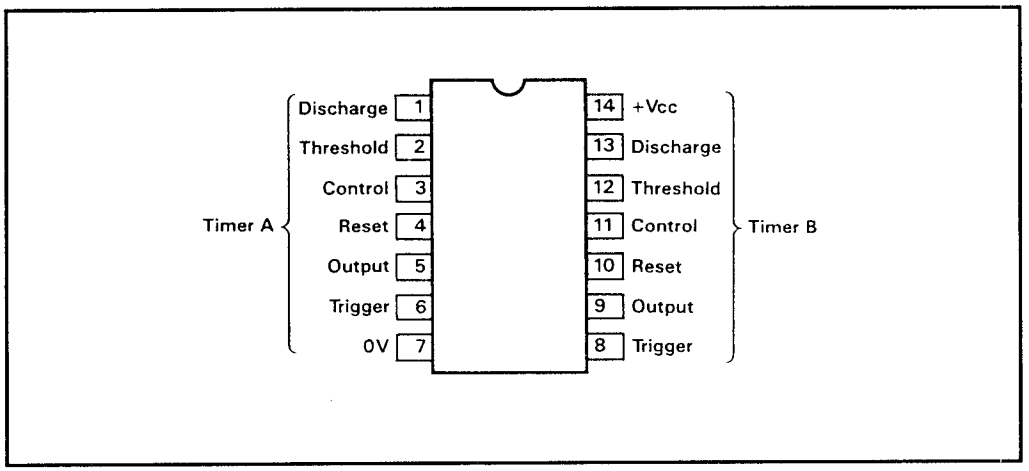

Figure 3: 556 dual-timer pin connections

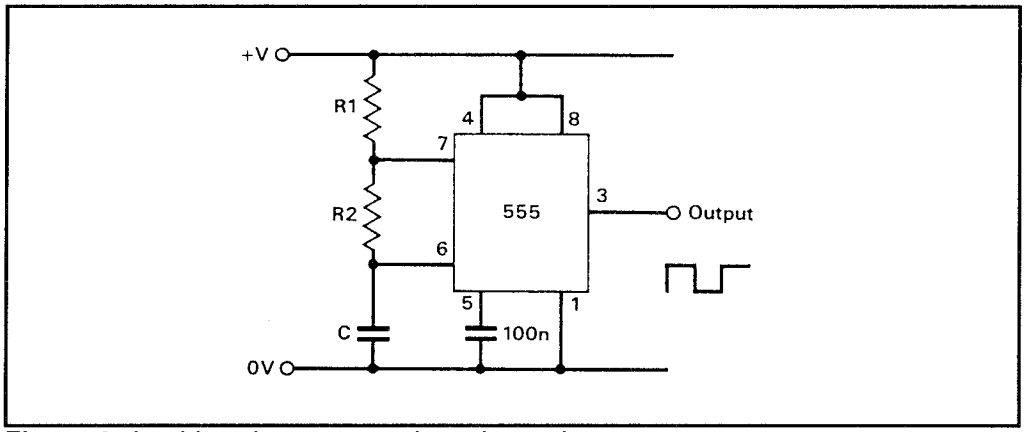

Figure 4: Astable pulse generator based on a timer

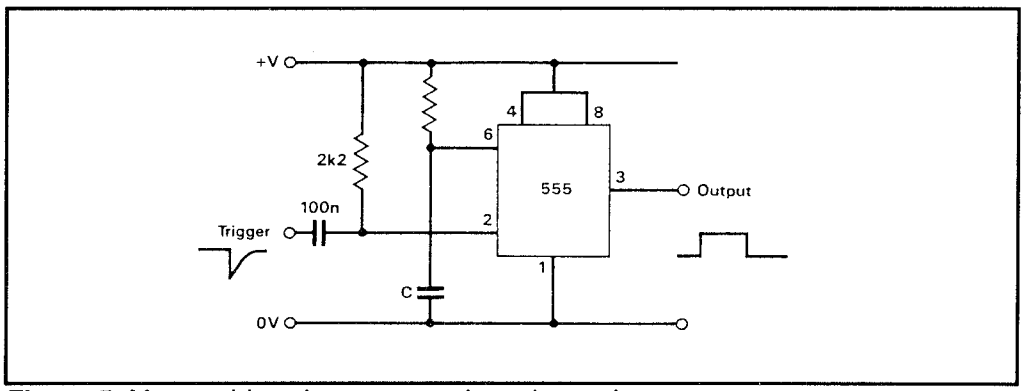

Figure 5: Monostable pulse generator based on a timer

Low-power timers (e.g., CMOS 555, with up to 200 mA for a standard 555) are not capable of delivering substantial levels of output current. CMOS devices can, however, deliver sufficient current to support the connection of up to two TTL loads.

Since the 555 timer is capable of switching appreciable currents rapidly, local decoupling capacitors are usually fitted near a timer device. In many applications, an electrolytic capacitor of 10 µF or 47 µF is fitted close to pin-8 of the standard 555.

An astable pulse generator based on a 555 timer is shown in Figure 4. The output waveform has a period determined by C, R1 and R2, and has an amplitude that is approximately equal to the supply voltage.

Output Waveform Characteristics

Time for which output is high:

$$t_{ON} = 0.693\ (R1 + R2)\ C$$

Time for which output is low:

$$t_{OFF} = 0.693\ R2\ C$$

Period of output:

$$t = t_{ON} = t_{OFF} = 0.693\ (R + 2R2)\ C$$

Prf of output

$$f_P = \frac{1.44}{(R1 + 2R2)\ C}$$

Mark to space ratio of output:

$$\frac{t_{ON}}{t_{OFF}} = \frac{R1 + R2}{R2}$$

Duty cycle of output:

$$\frac{t_{ON}}{t_{ON} + t_{OFF}} = \frac{R1 + R2}{R1 + 2R2} \cdot 100\%$$

As an example, an astable timer has R1 = R2 = 10 kΩ and C = 220 nF. The square wave produced by this arrangement has a frequency which is:

$$\begin{aligned} f_P &= \frac{1.44}{(R1 + 2R2)\ C} \\ &= \frac{1.44}{[10\ k\Omega + (2 \times 10\ k\Omega)] \times 220\ nF} \\ &= \frac{1.44}{30 \times 10^3 \times 220 \times 10^{-9}} \\ &= \frac{1.44}{30 \times 220} \times 10^6 \\ &= \frac{1.44}{6600} \times 10^6 \\ &= 0.000218 \times 10^6 \\ &= 218\ Hz \end{aligned}$$

the mark to space ratio of the output waveform will be given by:

$$t_{ON}/t_{OFF} = \frac{R1 + R2}{R2} = \frac{10\ k\Omega + 10\ k\Omega}{10\ k\Omega} = \frac{20\ k\Omega}{10\ k\Omega} = 2$$

A monostable pulse generator based on a 555 timer is shown in Figure 5. The monostable timing period is initiated by a falling edge (i.e., a high to low transition) applied to the trigger input. When such an edge is received and the trigger input voltage falls below 1/3 of the supply voltage, the 555 output at pin 3 goes high and the monostable pulse is generated for a period determined by the time constant C x R. The amplitude of the pulse is approximately equal to the supply voltage. The output pulse has the following characteristics:
Period for which the output is high:

$$t_{ON} = 1.1\ R\ C$$

Recommended trigger pulse width:

$$t_{TR} < 0.25\ t_{ON}$$

As an example, a monostable timer operates with C = 100 nF and $ = 47 kΩ. The duration of the monostable pulse output is:

$$\begin{aligned} t_{ON} &= 1.1\ R\ C \\ &= 1.1 \times 47\ k\Omega \times 100\ nF \\ &= 1.1 \times 47 \times 10^{3} \times 100 \times 10^{-9} \\ &= 5170 \times 10^{-6} \\ &= 5.170\ ms \end{aligned}$$

3/2
Electronic Fundamentals

3/2 - C	Components
3/2 - C - AC	Active Components
3/2 - C - AC - Ti	Timers

3/2 - C - AC
Active Components

3/2 - C - AC -Tr
Triacs

Basic Function

Triacs are a refinement of the thyristor which, when triggered, conducts on both positive and negative half-cycles of the applied voltage. Triacs have three terminals known as main terminal one (MT1), main terminal two (MT2) and gate (G), as shown in Figure 1. Triacs can be triggered by positive and negative voltages applied between G and MT1 with positive and negative voltages present at MT2 respectively. Triacs thus provide full-wave control and offer superior performance in AC power control applications when compared with thyristors (which only provide half-control).

In order to simplify the design of triggering circuits, triacs are often used in conjunction with diacs (the equivalent of a bi-directional zener diode). A typical diac conducts heavily when the applied voltage exceeds approximately +/- 32 V. Once in the conducting state, the resistance of the diac falls to a very low value and thus a large current will flow. Like their half-wave counterparts, triacs can switch appreciable values of current very rapidly. The switching action generates spikes which are carried for some distance along the supply lines. Spikes can also be radiated from wiring and may cause an appreciable level of RF noise which may affect radio reception over some distance. In many applications, a simple L-C filter (typically based on a 100 nF capacitor and a couple of small ferrite-cored inductors) is incorporated in the main supply connection to prevent noise

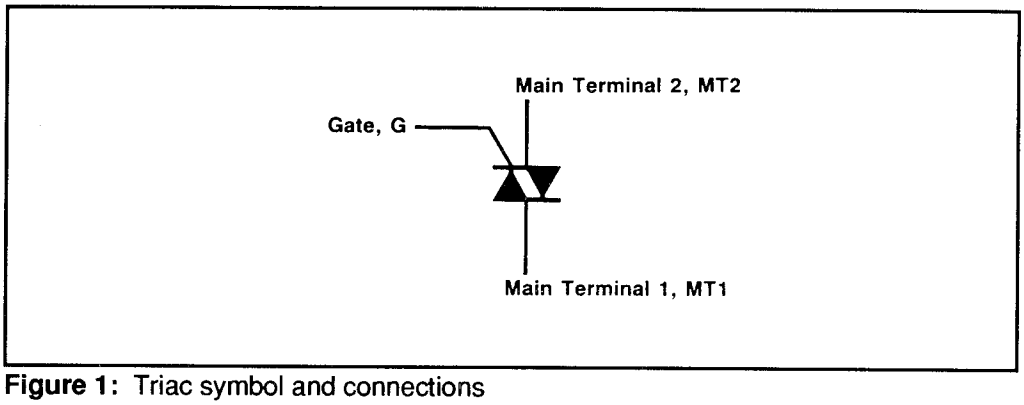

Figure 1: Triac symbol and connections

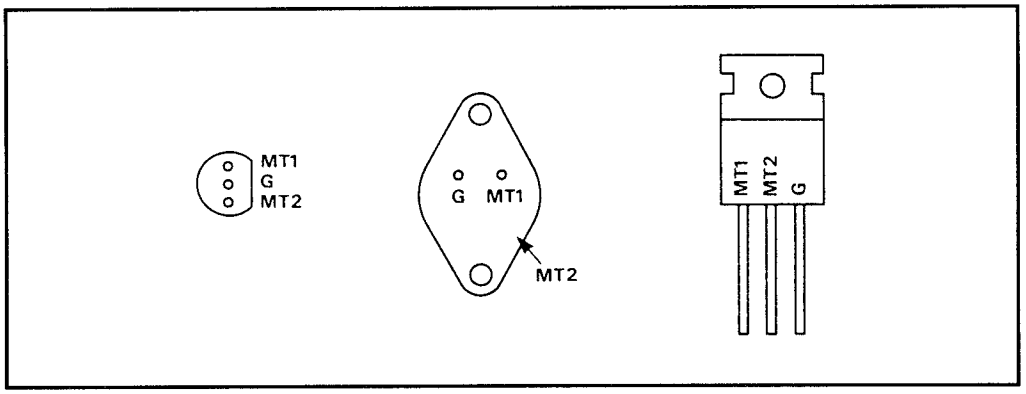

Figure 2: Triac casings and terminals

radiation. Such filters can be subject to considerable loading, and failure of the capacitor or inductor is not uncommon. The filter capacitor normally fails in a short-circuit condition. Rarely does it go open-circuit. This causes the main fuses to blow. Alternatively, when the fuse does not blow (or is of a too large value), the inductor itself may become an open circuit due to the excessive current which flows when the capacitor fails. Damage in this area is usually easy to spot. The offending component(s) will be discolored due to overheating.

Table 1
Triac Data

Type	$I_{T(RMS)}$ amps	V_{RMM} volts	VGT volts	IGT(TYP) mA
BT139	15	600	1.5	5
TIC206M	4	600	2	5
TIC216M	6	600	3	5
TIC225M	8	600	2	20
TIC226M	8	600	2	50
TIC236M	12	600	2	50
TIC246M	16	600	2	50
TICP206D	1.5	400	2.5	2.5
TICP206M	1.5	600	2.5	2.5

Triacs may fail in one of several ways, including short or open circuit failure between MT1 and MT2, or between gate and either main terminal. Faults can usually be detected by removing the device from the circuit and testing it with an ohmmeter. The procedure described for testing thyristors in Section *"3/2 - C - AC - Thy"* should be followed, substituting MT1 and MT2 for anode and cathode (respectively), and checking that the device operates correctly when the battery and ohmmeter leads are reversed.

Warning

Triacs are often used in high-power applications and AC main supply lines. When connecting or disconnecting such devices, make sure that the equipment is switched off and that the AC power is disconnected.

3/2 - C - AC
Active Components

3/2 - C - AC -VR
Voltage Regulators

Basic Function

There was a time when components in a circuit could withstand fairly large ranges from the designed center. If the voltage coming to the device varied by a few volts, not much would happen.

To a large extent this is still true. The light bulb in your home is designed to operate at a nominal 117 VAC. If the voltage drops to 110 VAC or even 100 VAC, the lamp will continue to operate. The same is true if the voltage increases to 125 VAC.

This kind of tolerance isn't possible with many discrete components today. A variance of just 1/2 of a volt can cause the component to change its characteristics or to fail entirely.

As a case in point, not that many years ago, discrete components such as resistors had a 10-20% tolerance. Today a 5% tolerance is standard. The reason is that even fractions of a volt have become meaningful.

Voltage regulators are integrated circuits designed specifically for use in power supply applications where a constant voltage (or constant current) is required. Regulators are often fitted to low-voltage, stabilized DC power supplies and effectively replace a number of discrete components (transistors, resistors and capacitors).

Regulators are available in two basic forms: variable and fixed. Fixed regulators are more common and provide a fixed output voltage within fairly close tolerance limits (e.g., 5%) over a wide variation in load current. Many regulators are described as three-terminal since they require only three connections to a circuit. Their connections are simply referred to as input, output and common (see Figure 1).

Regulators invariably incorporate means to limit the output current to a specified value (e.g. 1 A). This current limiting facility ensures that in the event of a

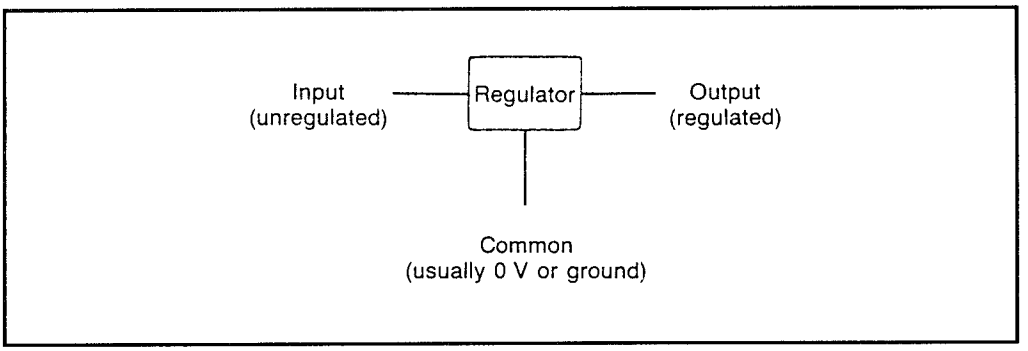

Figure 1: Voltage regulator symbol

component failure in the load circuit, the regulator or power supply is not damaged by excess current. In addition, most modern regulators incorporate thermal shut-down circuitry which prevents over-dissipation of the device due to excessive load currents or inadequate heat-sinking provision.

The following data refers to a range of commonly available fixed voltage regulators.

Table 1
Example Voltage Regulators

Device	Output (volts)	Output (amps)
7805	+5	1
7905	-5	1
7809	+9	1
7909	-9	1
7812	+12	1
7912	-12	1
7815	+15	1
7915	-15	1
7824	+24	1
7924	-24	1
78L05	+5	0.1
79L05	-5	0.1
78L12	+12	0.1
79L12	-12	0.1
78L15	+15	0.1
79L15	-15	0.1
78S05	+5	2
78D12	+12	2
78S15	+15	2
78S24	+24	2
78T05	+5	3
78T12	+12	3
78T15	+15	3
78H05	+5	5
78H12	+12	5

Variable voltage regulators require additional external components (such as preset or variable resistors) to determine the output voltage (see Figure 2). In some applications, the output voltage is fixed by a fixed potential divider arrangement (see Figure 3). This technique is used to provide a fixed stabilized voltage (e.g., 7.5 V) that is unobtainable using the standard range of fixed voltage regulators.

It is important to note that despite their apparent simplicity, voltage regulators

Voltage Regulator Circuits

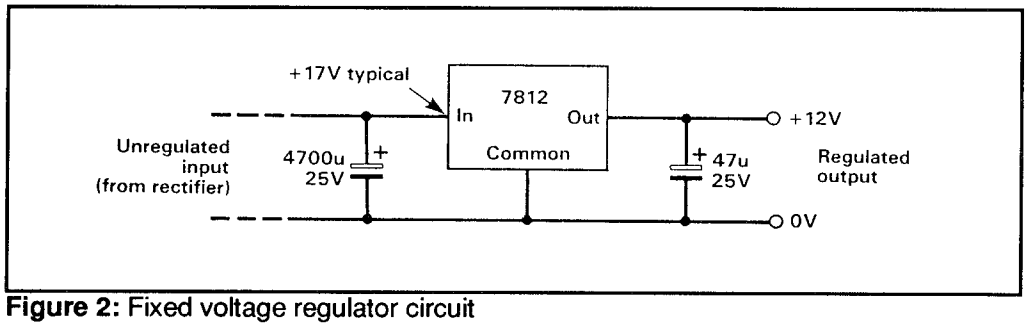

Figure 2: Fixed voltage regulator circuit

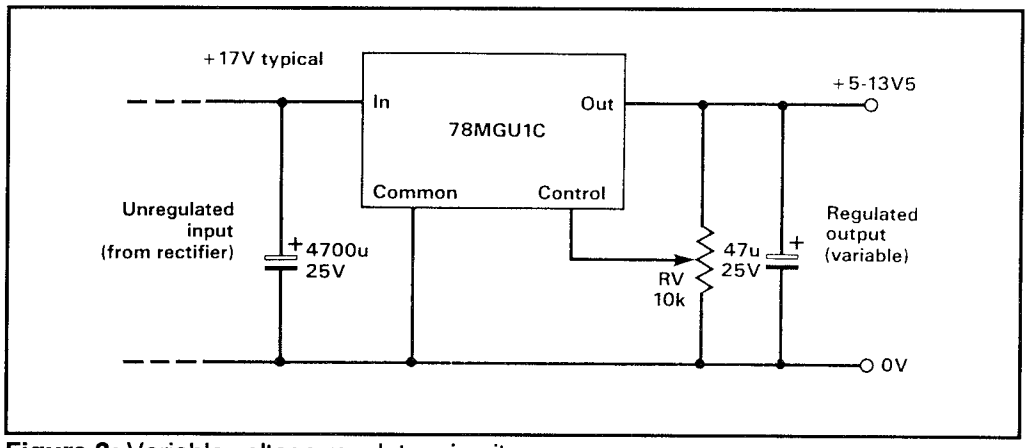

Figure 3: Variable voltage regulator circuit

have considerable internal gain and, to ensure unconditional high-frequency stability, circuits often incorporate low value (e.g. 100 nF) capacitors fitted between input and ground and/or between ouput and ground (see Figure 5).

These capacitors are most effective when positioned as close as possible to the voltage regulator pins. If a regulator has to be repositioned, it may be necessary to relocate these important decoupling components. Instability in a voltage regulator can usually be detected by erratic behavior (e.g. fluctuation in output voltage, premature shut-down or current limiting). In most applications, voltage

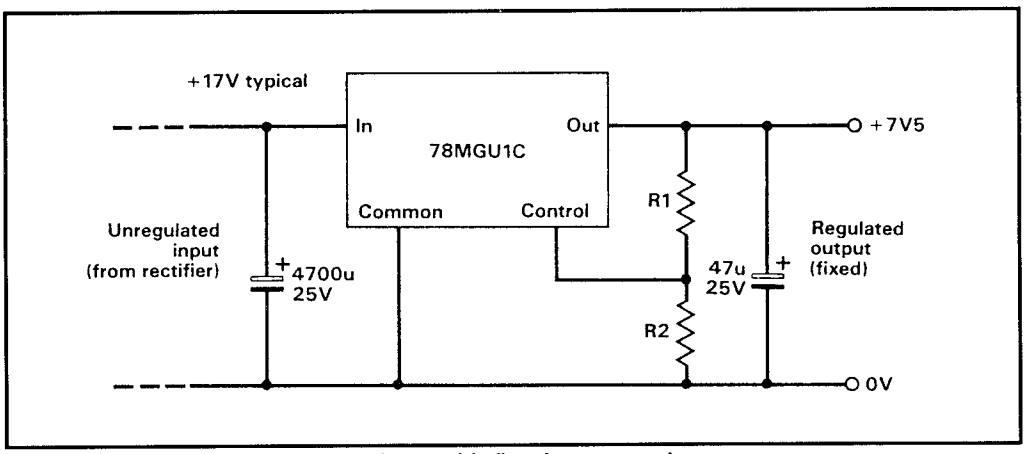

Figure 4: Variable voltage regulator with fixed output voltage

Table 1

Device	Output voltage min. (V)	Output voltage max. (V)	Output current (A)	Notes
723C	2.0	37		Normally used with an external transistor
L200	2.9	36	2	
L296	5.1	40	4	Switched mode
L460	5.1	40	2.5	Switched mode
LM317LZ	1.2	37	0.1	
LM317MP	1.2	37	0.5	
LM317T	1.2	37	1.5	
LM317K	1.2	37	1.5	
LM338K	1.2	32	5	
LM396K	1.2	15	10	
78MGU1C	5.0	30	0.5	
79MGU1C	−2.2	−30	1	

regulators operate at appreciable power levels. It is essential to provide adequate heat sinking. Failure to observe this precaution may result in premature current limiting or output voltage foldback due to thermal shutdown. When replacing a regulator IC, it is necessary to ensure that the replacement device is correctly fitted to the heat sink. This often requires the use of a heat sink compound.

When troubleshooting power supplies, most regulators require a minimum of 2 V differential between input and output voltages in order for the device to operate correctly. This means that if the voltage regulator is fitted in a 12 VDC power

supply, it must be supplied with at least 14 VDC of raw (unregulated) input under all conditions. This fact explains why some power supplies perform badly when operated at near full-load, as the transformer/rectifier arrangement may be unable to deliver sufficient voltage to give the regulator sufficient "headroom" to operate.

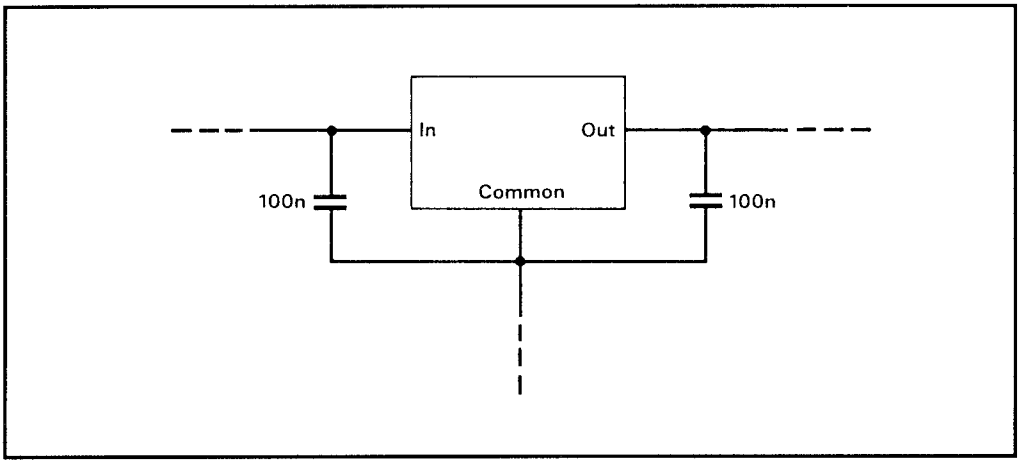

Figure 5: High frequency decoupling

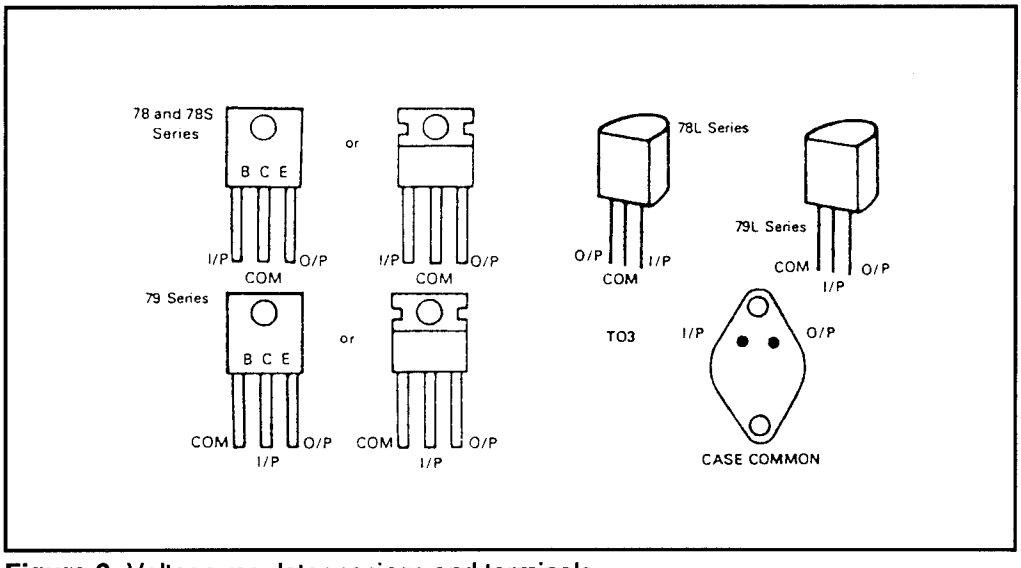

Figure 6: Voltage regulator casings and terminals

3/2
Electronic Fundamentals

3/2 - C	Components
3/2 - C - AC	Active Components
3/2 - C - AC - VR	Voltage Regulators

3/2 - C - PC
Passive Components

3/2 - C - PC - A
An Introduction

Some separate the types of components into passive and active. Among the passive components are resistors, capactitors, inductors and transformers. Among the active components are diodes, transistors, integrated circuits (ICs), thyristors, triacs, LEDs (light emitting diodes), voltage regulators, OPs (operational amplifiers), timers, logic gates, and CPUs (central processing units, sometimes called microprocessors).

The major difference is that passive components cannot themselves generate voltage or current, nor can they provide amplification (gain). They "condition" the voltage and current produced by other (active) components. This includes attenuation, waveshaping, and storing. Active components can generate voltage and/or current, or can amplify it.

Understanding what the individual components do, how they do it, and how they interact, goes a long way in understanding troubleshooting and repair.

3/2
Electronic Fundamentals

3/2 - C	Components
3/2 - C - PC	Passive Components
3/2 - C - PC - A	An Introduction

3/2 - C - PC
Passive Components

3/2 - C - PC - C
Capacitors

Basic Function

The workings of a capacitor cause problems for some who are new to electronics. The schematic symbol shows a break in the circuit, which is very much what the capacitor is (for DC, anyway).

Their primary purpose is to store energy. Capacitors do this by holding an electrical field in the dielectric between their plates. This ability makes them useful in a variety of ways.

They can hold the charge, sometimes for extended periods of time. This makes them suitable as a reservoir. Some devices now use a capacitor to hold the memory of a device in case there is a temporary power outage. This works in much the same way as a battery backup.

Current

By allowing the capacitor to fill and then drain off the charge at a regular rate, the current flowing through the capacitor is smoothed. This function is used in power supplies to filter the incoming AC into the needed DC.

Because they allow passage of AC while being open to DC, they are also used as AC couplers between amplifier stages, and as decouplers to help eliminate AC noise in a DC circuit. (For the latter case, a capacitor placed between the circuit and ground shunts, or decouples, any AC while having no effect on the DC.)

Rating

Capacitors are rated in Farads. This is a very large unit of measurement beyond the limits of actual capacitance devices. Consequently, capacitors are rated in tiny fractions of a Farad. The most common are µF (micro, or one one-millionth) and pF (pico, or one one-billionth).

Characteristics

1. The actual value depends on how the capacitor is manufactured. Among the considerations are overall physical size, effective surface area of the plate(s), thickness of the dielectric, the dielectric constant and the capacitor's function.

2. The working voltage is important. This is the maximum voltage that can be applied continuously under the operating conditions. Exceeding this rating can cause serious trouble, including fire and even explosion.

3. The tolerance rating may be as high as 20% or as low as 2%. (Capacitors with greater accuracy are rare.)

4. The temperature range at which the capacitor functions is the temperature coefficient.

5. The stability of the capacitor, across its operational range and across time, can help determine which component is needed.

6. The maximum leakage current which flows in the dielectric of the capacitor concerns the flow of DC through the capacitor. Ideally this will be zero. (The capacitor should be open to DC current,) with the DC resistance between the plates being infinite. In reality, there is always some leakage.

Replacement

As is the case with resistors, replacement capacitors must match the original. It can be an improvement on it in some ways. You can replace a capacitor rated to handle 15 V with one designed to handle 25 V, but not the other way around. Likewise, you can replace a capacitor of a 20% tolerance with one of 10% tolerance.

This kind of upgrading is not only allowable but is sometimes preferable. It's possible that the manufacturer installed a lower rated capacitor to save money. The circuit will operate, but could fail more often or more easily. By installing upgraded capacitors you improve the margin under which they operate.

This is not always possible. Capacitors with higher ratings as far as working voltage, tolerance and stability are sometimes physically larger and won't fit. Another area you can exceed is the component's rated operating temperature. As the temperature increases, the capacitor's working voltage level decreases. The rule of thumb is that the actual working voltage should be no greater than about 50-60% of the rated working voltage.

Frequency

The frequency in the circuit is also important. Most capacitors have no difficulty as long as the frequency is below 100 kHz. Above this, there may be increased losses across the dielectric, increased heating, and a loss of stability. Yet another consideration involves capacitors used as filters in power supplies. These are rated for ripple current. The typical ripple current rating for a large filter capacitor is in the 2-8 A range.

Table 1 Capacitor Characteristics

Capacitor type	Ceramic	Electrolytic	Metallised film	Poly-carbonate	Poly-styrene	Tantalum	Mica	Polyester	Poly-propylene
Capacitance range (F)	2.2p to 100n	100n to 68m	1u to 16u	10n to 10u	10p to 10n	100n to 100u	2.2p to 10n	10n to 2.2u	1n to 470n
Typical tolerance (%)	±10 and ±20	−10 to +50	±20	±20	±2.5	±20	±1	±20	±20
Typical voltage rating (d.c.)	50 V to 250 V	6.3 V to 400 V	200 V to 600 V	63 V to 630 V	160 V	6.3 V to 35 V	350 V	250 V	1 kV
Temperature coefficient (ppm/°C)	+100 to −4700	+1000 typical	+100 to +200	+60	−150 to +80	+100 to +250	+50	+200	−200
Stability	Fair	Poor	Fair	Excellent	Good	Fair	Excellent	Good	Good
Ambient temperature range (°C)	−85 to +85	−40 to +85	−25 to +85	−55 to +100	−40 to +70	−55 to +85	−40 to +85	−40 to +100	−55 to +100
Typical applications	Decoupling, temperature compensation	Decoupling, reservoir and smoothing circuits in power supplies	High voltage power supplies	Filters, oscillators, timing	General purpose, timing and decoupling	General purpose, timing and decoupling	Tuned circuits, filters, oscillators	General purpose	High-voltage a.c. circuits

On these same capacitors there is often a bleeder resistor. These capacitors tend to store charges for long periods. The bleeder resistor drains this charge when the power supply is turned off. Its size and power rating are determined by the voltage drop and the current.

There are many types of capacitors. Among them are ceramic, air, plastic film, tantalum and electrolytic. An exact match in replacement is almost invariably required.

Of special note here is that some capacitors (such as electrolytic) have polarity. When the capacitor is polarized it is critical to install it with the correct polarity. Failure to do so causes overheating at the very least. It is not uncommon for the capacitor to explode under this circumstance. Either way, damage to other components in the circuit is almost assured.

Color Coding

Many capacitors have their values stamped or printed on the casing. Some may use a color coding. This coding on capacitors is in the same order as the code for resistors.

The major difference is that capacitors sometimes use dots of color rather than bands. This is particularly true if the capacitor is of the rectangular mica or button type.

The color scheme and order are the same.

Table 2
Color Code for Ceramic Capacitors

Color	Figure	Multiplier	Tolerance (%)
Black	0	1	± 20
Brown	1	10	-
Red	2	100	-
Orange	3	1000	-
Yellow	4	10,000	-
Green	5	-	-
Blue	6	-	-
Violet	7	-	-
Gray	8	0.01	-
White	9	0.1	± 10

The EIA standard is shown in Figure 1. The first significant digit is at the top left, with the coding proceeding in a counter clockwise direction. A mica capacitor so coded, with dots of red, orange and black on the top row, and brown, gold and blue on the bottom, would have 2, 3 and 0 as the significant digits, a multiplier of 10, making the capacitor a 2300 pF value. The gold spot shows that the capacitor has a tolerance of 5% and the blue dot signifies a voltage rating of 600 V.

Table 3
Color Codes for Plastic film Capacitors

Color Bands			Capacity (in µF)
Brown	Black	Orange	0.01
Brown	Green	Orange	0.015
Red	Red	Orange	0.022
Orange	Orange	Orange	0.033
Yellow	Violet	Orange	0.047
Blue	Gray	Orange	0.065
Brown	Black	Yellow	0.1
Brown	Green	Yellow	0.15
Red	Red	Yellow	0.22
Orange	Orange	Yellow	0.33
Yellow	Violet	Yellow	0.47
Blue	Gray	Yellow	0.68
Brown	Black	Green	1.00
Brown	Green	Green	1.5
Red	Red	Green	2.2

Table 4
Color Codes for Tantalum Capacitors

Color	Top	Band	Spot	Voltage
Brown	1	1	10	-
Red	2	2	100	-
Orange	3	3	-	-
Yellow	4	4	-	6.3
Green	5	5	-	16
Blue	6	6	-	20
Violet	7	7	-	20
Gray	8	8	0.01	25
White	9	9	0.1	3
Black	-	0	1	10
Pink	-	-	-	35

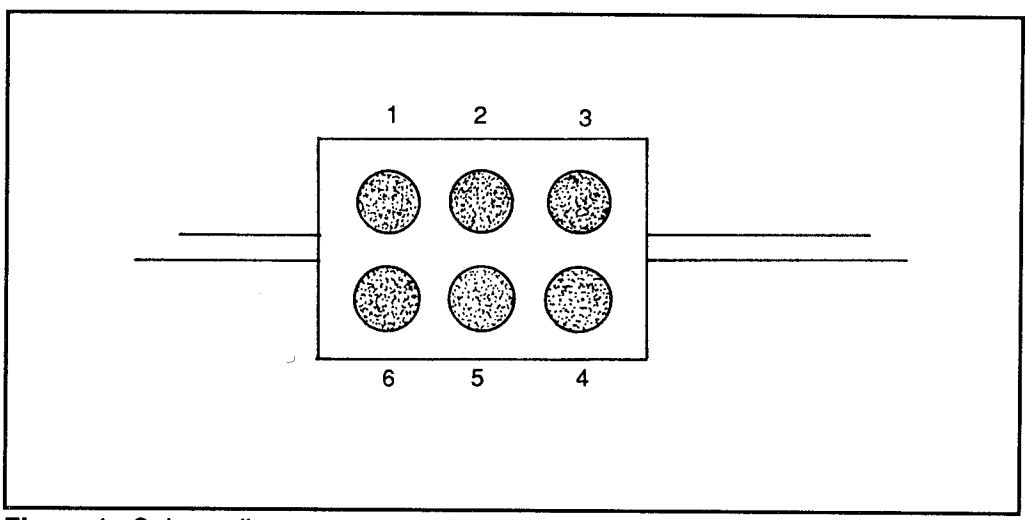

Figure 1: Color coding on a rectangular mica capacitor

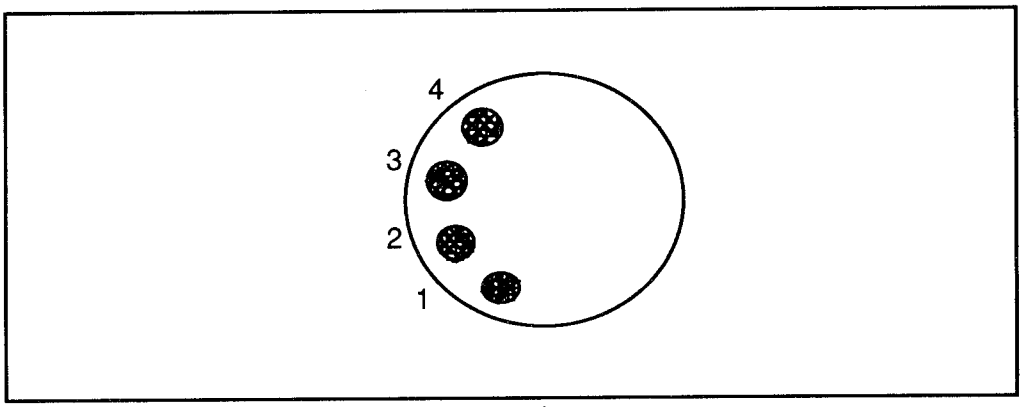

Figure 2: Color coding on button-type capacitor.

Note that some surplus mica capacitors use a different coding. These are the AWS (Army War Standards) and JAN (Joint Army-Navy) standards. If this scheme is used, the first dot in the top row will be black or silver. In this case, the first significant digit will be the second dot—the second significant digit will be the third and the bottom row will remain as with the EIA standard.

Figure 2 shows the circular coding on button capacitors. The direction is counter clockwise. Again, the first dot is the first significant digit; the second is the second significant digit; the third is the multiplier; the last is the tolerance.

Variable Capacitors

As with variable resistors, variable capacitors can be adjusted. With rare exception, this is done by means of a knob on a shaft that protrudes through the cabinet of the device (or by some similar arrangement).

The basic construction consists of plates separated by a dielectric, just as with a fixed capacitor, but with the variable capacitor, the plates are mounted to a shaft so that one set of plates can be moved. The effect is to increase or decrease the surface area which in turn changes the capacitance. The stationary plates are the stator plates (often called, simply, the stator). The moving plates are the rotor plates (or rotor).

The dielectric may be a gas or a solid. The former tends to be large and heavy. Because of this, and because improvements have been made in solid dielectrics, you'll find fewer and fewer air capacitors except in devices that use large amounts of energy, such as higher power transmitters.

The design of the variable capacitor is similar to the design of a fixed capacitor.

The dielectric, being an insulator, doesn't conduct electricity. It can, however, reach a bursting point. If this happens, an electrical charge will jump the gap between the plates. If the dielectric is solid, a hole may be burned through it, causing permanent damage to the component.

One of the most common uses of the variable capacitor is in tuning circuits, such as receivers and transmitters.

Table 5

Variable/preset preset capacitor type	Air spaced	Ceramic	Plastic film
Capacitance range (pF)	5 to 500	2 to 200	10 to 750
Typical tolerance (%)	±10	±20	±10
Typical voltage rating (DC)	250 V to 1 kV	63 V	63 V to 150 V
Stability	Excellent	Fair	Good
Typical applications	Transmitters, RF signal generators	Compensation, oscillator trimming	Radio tuning, oscillator trimming

3/2
Electronic Fundamentals

3/2 - C	Components
3/2 - C - PC	Passive Components
3/2 - C - PC - C	Capacitors

110 K as a replacement would be risky. It would be a mismatch. And if the original has a 1% tolerance, the 110 K resistor in the example above is out of the question. (If you see a 1% tolerance resistor, there is almost certainly a very good reason for it.)

The physical size of the resistor could also be a factor. 1/4 watt resistors are common in part because they are less expensive than those with a higher power rating. They are also physically smaller. A 10-watt resistor is considerably larger.

There are times when a larger resistor can be used, but much of the time the larger resistor simply won't fit correctly.

Color Codes

Carbon and metal oxide resistors are marked with color codes to tell you the value and tolerance of the component. There can be as many as six of these bands. (Note that the code shown in Table 1 is also used for other components that are color coded.)

Figure 1 shows a four-band resistor. The first band is the 1st significant figure; the second is the 2nd significant figure; the third is the multiplier; and the fourth is the tolerance rating.

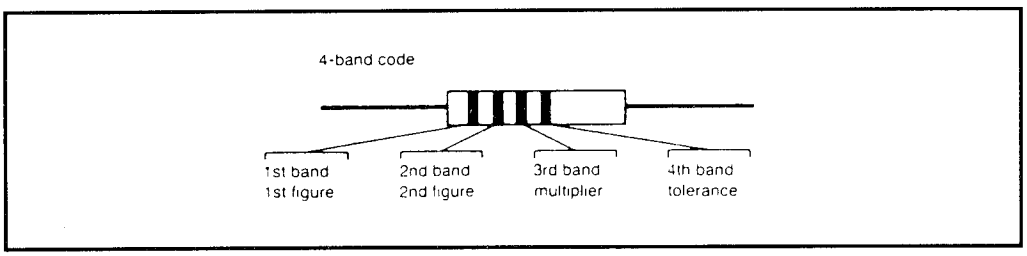

Figure 1: Coding of four-band resistors

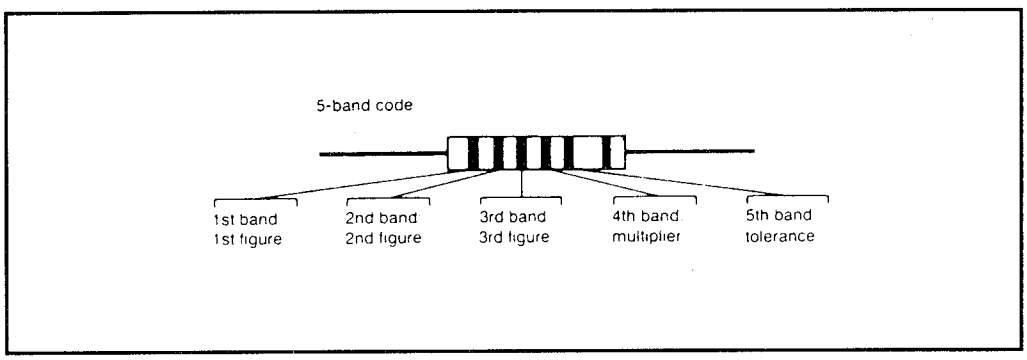

Figure 2: Coding of five-band resistors

Table 2
Resistor Color Codes

Color	Figure	Multiplier		Tolerance (%)
Silver	-	0.01	Ω	10
Gold	-	0.1	Ω	5
Black	0	1	Ω	-
Brown	1	10	Ω	1
Red	2	100	Ω	2
Orange	3	1	KΩ	-
Yellow	4	10	KΩ	-
Green	5	100	KΩ	0.5
Blue	6	1	MΩ	0.25
Violet	7	10	MΩ	0.1
Gray	8	100	MΩ	-
White	9	-		-

For example, if the bands are brown, black, red and silver, the significant numbers are 1 and 0. The multiplier is 2. This means that the value of the resistor is 1000 Ω (10 x 100). The silver band signifies a tolerance of 10%.

If a resistor is coded orange, yellow and orange, with no fourth band, its value is 34,000 Ω and it has a tolerance rating of 20% (rare these days).

If the resistor has five bands (Figure 2), read it the same except that the third band is the 3rd significant digit, which makes the fourth band the multiplier and the fifth band the tolerance rating.

In this case, envision a five-band resistor that is marked blue, green, yellow, orange and gold. The significant numbers are then 6, 4 and 3, with the multiplier being 3. This shows the value to be 643,000 Ω (643 KΩ). The gold band signifies a 5% tolerance.

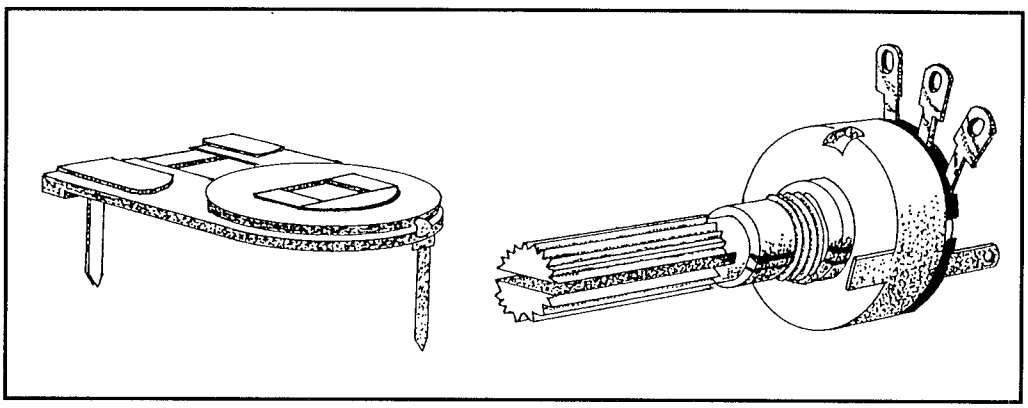

Figure 3: Two common types of variable resistors

3/2 - C - PC
Passive Components

3/2 - C - PC - R
Resistors

Basic Function

Resistors "resist" the flow of voltage and current. In this way they allow the control of both. For example, the voltage drop across a resistor (see Ohm's Law Section *"3/2 - O"*) can be used to provide the proper bias potentials for driving transistor or IC amplifiers. The resistor can also be used to attenuate (reduce). One extreme example of this is the bleeder resistor which absorbs and dissipates energy.

The value of a resistor is measured in ohms (Ω). Since the values needed are often very high, resistors are often rated in KΩ or MΩ (thousands and millions, respectively). This and other electrical characteristics are determined by the materials from which the resistor is made.

Value

As stated above, this is expressed in Ω, KΩ or MΩ.

Power Rating

This is the amount of power, in watts, that the resistor can dissipate safely. In most circuits this value is very small. 1/4 watt and lower is fairly normal. However, there are times when the power dissipation must be higher. This is usually accomplished by making the resistor physically larger, and often with a covering that helps dissipate the heat.

Accuracy

The accuracy (tolerance) of a resistor can be anything from about 20% (rare) to less than 1%. The most common are accurate within 5% of the rated value.

Temperature

The temperature coefficient gives you an indication of how the resistor performs as the temperature changes. Usually this is relatively unimportant, but it could be critical if the device is operated under temperature extremes, or if the resistor is expected to dissipate heat.

Stability

Other conditions can also affect the way the resistor performs. Its stability under the operating range isn't usually critical, but as with the temperature coefficient, it may be unstable under certain conditions.

Noise

Dissipation of energy always causes some noise. With rare exception, this doesn't matter and won't affect the operation or the rest of the circuit.

Replacement

When replacing resistors, be sure that the replacement is at least as good as the original. It can have better ratings, but not worse ones. For example, if the resistor being replaced had a 5% tolerance, you can use one with a 1% tolerance, but not one with a 10% tolerance.

Either way, the K value must be identical. A 110 K resistor is not an upgrade to a 100K resistor—it is simply a mismatch. In this case it's close enough that it might work. It might also cause the unit to act erratically, or cause damage.

If that 100 K resistor has a tolerance of 10%, it could have an actual value of anything from 90 K to 110 K. At first, you might think that you could put a 110 K resistor in its place. However, if that 110 K resistor also has a 10% tolerance, its actual value could be anything from 99 K to 121 K. (Using one rated at a 5% tolerance doesn't help much. This would mean that its upper end would be 115.5 K and closer to the need value, but its lower end would be 104.5 K.)

Also note that this shows that if the original resistor is of tighter tolerance, the importance of an exact match becomes more critical. In the example above you might (or might not) get away with putting a 110 K resistor in the place of a 100 K if that 100 K resistor is rated at 10%. If it has a 5% tolerance, using the

Table 1

Resistor type	Carbon composition	Carbon film	Metal film	Metal oxide	Ceramic wire-wound	Vitreous enamel wire-wound	Aluminium clad wire-wound
Resistance range Ω	2.2 to 1 M	10 to 10 M	1 to 1 M	10 to 1 M	0.47 to 22 k	0.1 to 22 k	0.1 to 1 k
Typical tolerance	±10	±5	±1	±2	±5	±5	±5
Power rating (W)	0.125 to 1	0.25 to 2	0.125 to 0.5	0.25 to 0.5	4 to 17	2 to 4	25 to 50
Temperature coefficient (ppm/°C)	+1200	−250	+50 to 100	+250	±250	±75	±50
Stability	Poor	Fair	Excellent	Excellent	Good	Good	Good
Noise performance	Poor	Fair	Excellent	Excellent	n/a	n/a	n/a
Ambient temperature range to (°C)	−40 to +105	−45 to +125	−55 to +125	−55 to +155	−55 to +200	−55 to +200	−55 to +200
Typical applications	Power supplies and large-signal amplifiers	General purpose	Small-signal amplifiers, test and measuring equipment		Power supplies and large-signal amplifiers	General purpose power dissipation	

Occasionally, you may see a resistor with a silver or black band at the very end of the resistor and ahead of the color coding. If seen, this simply means that the resistor is of either industrial or military specifications.

Variable Resistors Also called potentiometers (pots for short), variable resistors can be adjusted across a range of resistances. Some have shafts to accept knobs, others merely have a slot through which you can insert a screwdriver to make the adjustment.

Table 3

	Variable resistor type			
	Carbon track	**Cermet**	**Wire-wound**	**Multiturn wirewound**
Resistance range (Ω)	5 k to 1 M	10 to 1 M	10 to 100 k	100 to 100 k
Typical tolerance (%)	±20	±10	±5	±5
Power rating (W)	0.25	1 to 5	1 to 3	1.5 to 3
Temperature coefficient (ppm/°C)	−500 typical	±150	+50 typical	+50 typical
Stability	Poor	Good	Good	Good
Noise performance	Poor	Good	Good	Good
Ambient temperature range (°C)	−10 to +70	−40 to +85	−20 to +100	−55 to +125
Typical applications	General purpose	Power supplies, test and measuring equipment		Test and measuring equipment

3/2 - C Components
3/2 - C - PC Passive Components
3/2 - C - PC - R Resistors

3/2 - C - PC
Passive Components

3/2 - C - PC -T
Transformers

Basic Function

Transformers are used for coupling and/or changing alternating currents from one circuit to another. The two circuits are coupled together by mutal inductance; the input (primary) and output (secondary) windings comprise inductors wound on a common core. The transformation which occurs realates to the ability of a trasnformer to step-up or step-down the voltage present at the primary (input). Voltage is said to be stepped-up when the secondary voltage is greater than the primary voltage, and stepped-down when the secondary voltage is less than the primary voltage.

Unlike an amplifier, a transformer provides no inherent power gain. The power at the secondary winding will, in fact, be slightly less than at the primary due to losses within the transformer. It is important to note that an increase in secondary voltage can only be achieved at the expense of a corresponding reduction in the secondary current and vice versa. (By using the power formula P=IE you can discover and explore this for yourself.)

Typical applications for transformers include stepping-up or stepping-down voltages in power supplies, coupling signals in AF amplifiers, matching impedance and DC isolation.

The electrical characteristics of a transformer are determined by a number of factors including the core material and physical dimensions. Parameters to consider when selecting a transformer for a particular application include:

Characteristics

1. The rated primary and secondary voltages and currents (a turns ratio or a voltage ratio may also be specified).

2. The power rating of the transformer. This is the maximum power, expressed in volt-amperes (VA) which can be continuously delivered by the transformer under a given set of conditions.

It is important to note that loading a transformer beyond its ratings can have dire consequences. The component may overheat, cause irreversible damage to the insulation between the adjacent turns and/or eventual fusing of the windings.

3. The frequency range of the component. Most power transformers operate happily at either 50 Hz or 60 Hz.
4. The regulation of a transformer. This is usually expressed as a percentage of full-load. The specification is a measure of the ability of a transformer to maintain its rated output voltage under load.

The following table summarizes the properties of commonly available transformers:

Table 1

Transformer type	Ferrite cored	Iron cored	Iron cored
Typical power rating	n/a	10m W to 10 W	3 VA to 500 VA
Typical regulation (%)	n/a	n/a	5 to 15
Typical frequency range (Hz)	1 k to 100 k	50 to 20 k	45 to 400
Typical applications	Pulse applications	AF amplifiers	Power supplies

n/a = not normally applicable to transformers of this type

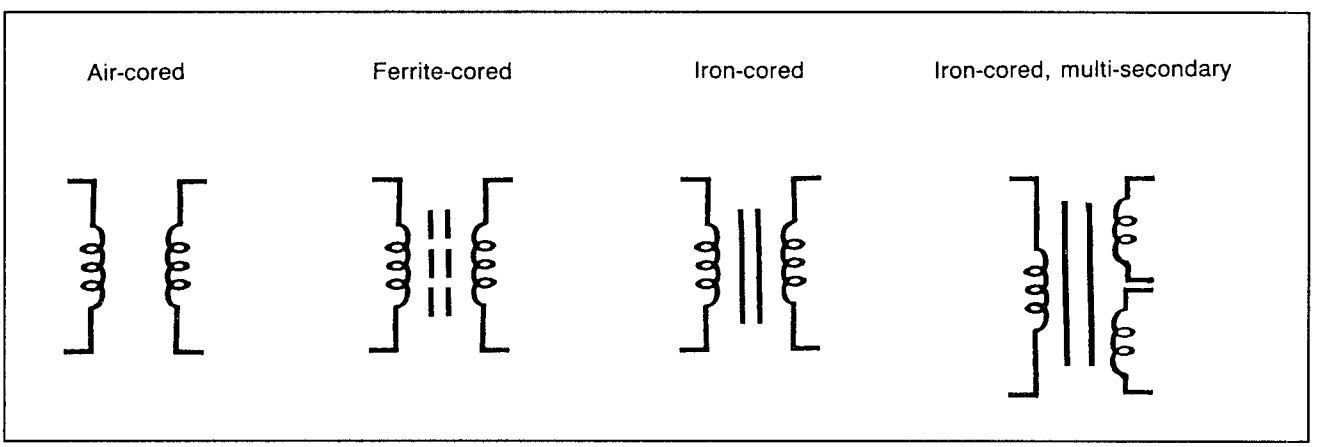

Figure 1: Transformer symbols

Several manufacturers can supply a range of replacement transformers with various ratings. Replacement transformers can also be manufactured on a one-off basis (though this can be expensive—it is well worth shopping around for a stock item before resorting to this course of action). Alternatively, transformers

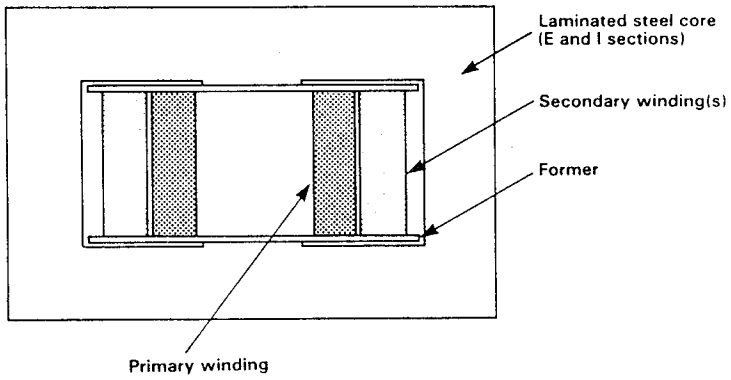

Figure 2: Transformer construction

can be constructed from proprietary kits. These are available in a variety of sizes (including 20 VA, 50 VA, 100 VA and 200 VA) and usually come with a double-section core (usually with the primary pre-wound), insulating shrouds, laminations and end-mounting frames.

Formulas

The following formulas are useful when constructing replacement low-frequency transformers which use laminated steel or toroidal cores:

(a) Turns ratio and voltage ratio

$$\frac{N_P}{N_S} = \frac{V_P}{V_S}$$

(b) Turns ratio and current ratio

$$\frac{N_P}{N_S} = \frac{I_S}{I_P}$$

(c) Current ratio and voltage ratio

$$\frac{I_P}{I_S} = \frac{V_S}{V_P}$$

where N_P and N_S are the number of primary and secondary turns respectively, V_P and V_S are the primary and secondary voltage respectively, and I_S and I_P are the primary and secondary current.

When replacing a transformer with a unit that is different from the original, it is essential that the power rating (in VA) for the replacement is adequate. The working VA for a power transformer can be estimated by calculating the total power consumed by each secondary load and multiplying it by 1.1 (to allow for losses within the transformer when on load).

For a transformer with a single secondary winding:

Secondary (load power) $P_L = L_S \times V_S$
Primary (input power) $P_{IN} = 1.1 \times P_L$

Where several secondary windings are present, it is necessary to determine the load power for each secondary and then add these together to find the total load (P_L). The primary (input) power can then be estimated by using the previous formula.

As an example, consider the case of a transformer having three secondary windings. Two windings are rated at 15 V and each supplies rms current of 2 A, while the third secondary is rated at 6.3 V and provides an rms current of 4 A.

The total secondary power is given by:

$$P_L = (15\ V \times 2\ A) + (15\ V \times 2\ A) + (6.3\ V \times 4\ A)$$

thus, $P_L = 30 + 30 + 25.2 = 85.2$ VA

The estimated input power (P_{IN}) is given by:

$$P_{IN} = 1.1 \times P_L = 1.1 \times 85.2 = 93.7\ VA$$

A replacement transformer rated at 100 VA would be satisfactory.

In any event, it is important to note that maximum power ratings for transformers are related to operating temperatures and should be derated when high ambient temperatures are expected. Further, in order to maintain high efficiency, it is important to avoid saturation within the core of a transformer. Where reliability and efficiency is important, transformers should be operated at well within their nominal VA rating.

The stray magntic field generated by a transformer pervades the space which surrounds it. The field around a power transformer may be appreciable and, to avoid stray coupling of signals and hummings, it is best to exercise care when positioning a transformer. For this reason, power transformers should never be

mounted closely to the early stages of an audio amplifier nor should they be placed adjacent to audio frequency transformers or cathode ray tubes.

As with inductors, it is important to ensure that the metal laminations of an iron-cored inductor are properly grounded, via the case and clamping screws. Failure to observe this precaution can result in a high level of radiated noise, particularly with high-current, switching and power control apparatus. Improperly grounding the transformer can also bring a potential safety hazard.

Finally, when replacing toroidal transformers, care must be taken to ensure that the ends of the fixing bolts do not simultaneously come into contact with a metal chassis or mounting framework. This causes a shorted turn which greatly reduces efficiency and may cause irreversible damage to the transformer windings.

3/2
Electronic Fundamentals

3/2 - C	Components
3/2 - C - PC	Passive Components
3/2 - C - PC - T	Transformers

3/2 - O
Ohm's Law

Formula

The basis of electronics involves the relationship between voltage, current and resistance. This relationship is expressed in Ohm's Law.

If you've been around electronics you'll have seen this law expressed and shown in more than one way. Some books present its most basic form as:

$$E=RI$$

others as a circle with the symbols in place. A few books will replace the "E" with a "V", because this component represents voltage. (The "E" stands for electromotive force.)

Some like the E=RI, and remember it as "Erie." Others prefer to swap the R and I around to make E=IR, and remember it as sounding like "ear." The two are the same. For this manual we will use the most common form, E=RI, since this is used most often. In this, E represents the voltage, R the resistance, and I the current (inductance).

With this equation, you can derive the other two parts of the formula by algebraic juggling.

This means, simply, that you apply the rule that if you multiply or divide one side of an equation by something, you must do exactly the same to the other side of the equation. If you take the original formula E=RI and divide each side by R, the Rs cancel out, leaving you with E/R=I. From this you can calculate the current flow by dividing the voltage by the resistance.

Likewise, if you divide each side of the original formula by I, the Is cancel out and you come up with E/I=R. Or, voltage divided by current equals resistance.

As mentioned above, this can also be represented with a circle. You need only to place a finger over the component you wish to calculate. What is left in the circle is the way you get it.

For example, place your finger over the E in Figure 1, showing that you want to

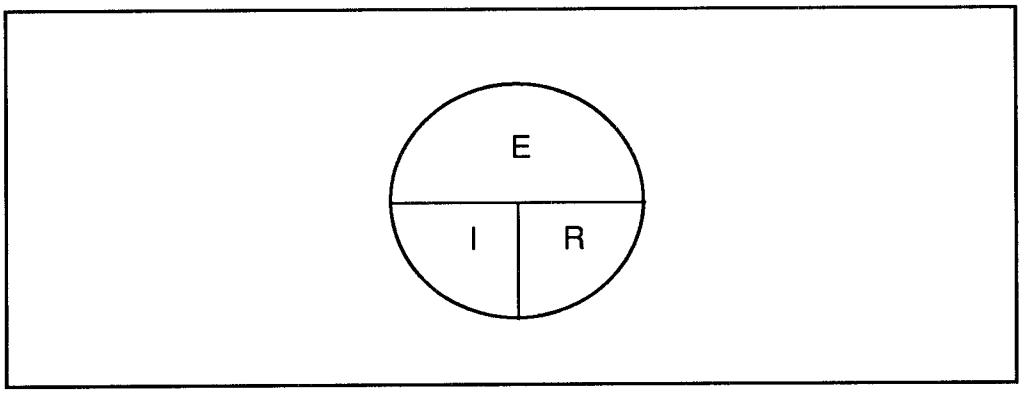

Figure 1: Ohm's Circle

calculate voltage. What remains is the R next to the I. Multiply to solve for E.

Or, place your finger over the I (meaning that you want to calculate the current). What remains now is the E over the R, which tells you to divide the resistance by the voltage.

Conductors/ Insulators

Materials which allow the flow of electricity are conductors; those which do not allow this flow are insulators. No substance known is either a perfect conductor nor a perfect insulator. However, among the best conductors are the metals, with the best of those being gold and the most common being copper. Examples of good insulators are air, rubber and certain plastics.

It should be noted that both conductance and resistance can be affected by temperature. This is one reason why some devices work just fine when first turned on and then fail after being on for a while (or vice versa).

A current may be produced within a conductor by connecting it to a source of voltage. As stated earlier, this is the electromotive force (abbreviated e.m.f.). To work there must be a complete circuit. This is because of the potential difference (p.d.).

Examples

In Figure 2 a standard 1.5 V cell is shown. The post at one end is the positive terminal and the flat area at the other end is the negative. Until the battery is connected to a complete circuit, nothing happens. Within a circuit there is a potential difference between the positive and the negative of 1.5 V. Touch the probes of a VOM to the two terminals and the VOM becomes the circuit and you can measure the voltage. The same is true for each component in the circuit, which brings us back to Ohm's Law.

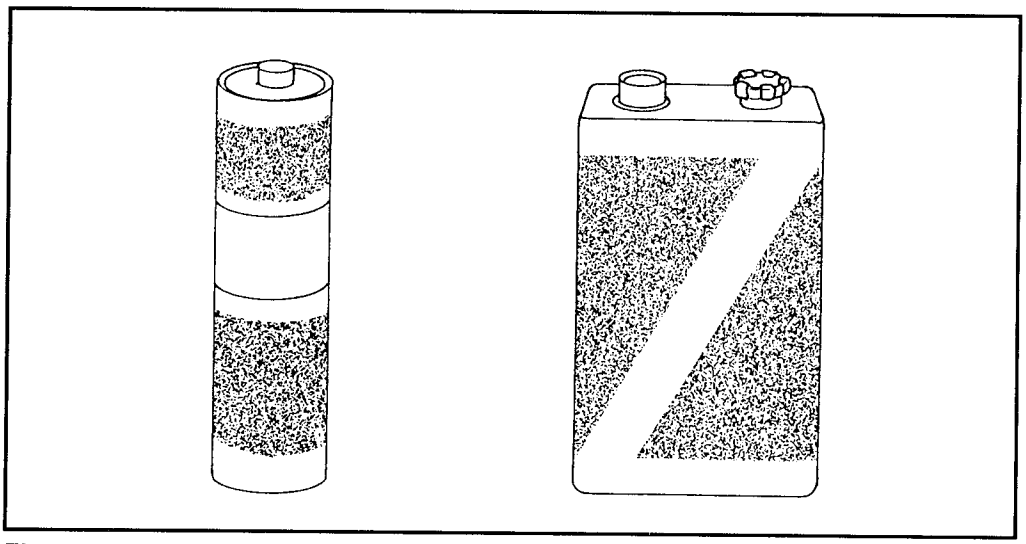

Figure 2: A battery holds potential voltage. It just "sits there" until a circuit is made.

The amount of current flowing in the circuit is proportional to the voltage (e.m.f.) applied and the resistance in the circuit or component through which that current flows.

Figure 3 shows a battery connected to a resistance. This resistance can be a complete circuit or a single component. Assume that the battery is a 6-V source.

If the resistance is nearly zero, the current flow is very high. For example, replace I=E/R with I=6/.001 (1/1000th of an Ohm). The current trying to flow is 6000 amps. An average battery can't produce this, but it means that the wire

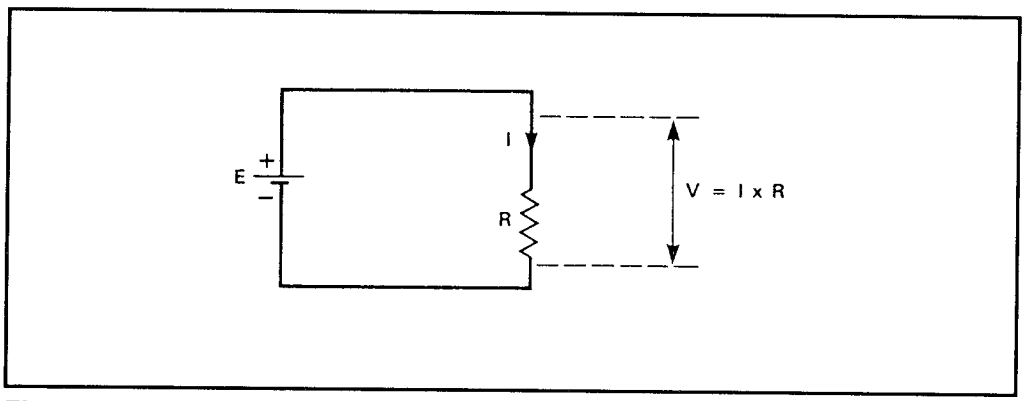

Figure 3: A basic circuit

will become hot and the battery will quickly drain. This is very nearly a dead short. Now replace the value of the resistance with a circuit or component of 100,000 (100 KΩ). Now the current flowing is 0.00006 A.

Try one for yourself. Imagine a 12 V source connected to a 10,000 Ω load. What is the current?

The formula is I=E/R. In this example E is 12 and R is 10,000. By dividing the current is 0.0012 A (1.2 mA).

You can switch and juggle the values in Figure 3 to explore Ohm's Law more completely. You may need to know, for example, what voltage is needed to produce a current of 0.1 A in a circuit of 10 KΩ. To do so, the voltage becomes the unknown, which means that to find it you use E=RI. The solution then becomes E= 0.1 x 10,000 = 1000 V.

3/2 - PVC
Power, Voltage, Current

Power

Energy is the ability to do work. It is usually measured in joules. Power is the rate at which this happens and is most often measured in watts when dealing with electronics. Once again there is a direct relationship between power and the voltage and current flowing.

This is expressed in the formula:

$$P=IE$$

(Most often this is expressed as P=EI, but "pie" is easier to remember.)

In this formula, power (P) is equal to the current (I) multiplied by the voltage (E). Thus, if 1 A is flowing with a source voltage of 12 V, the power used is 12 W. As with Ohm's Law, the formula can be juggled algebraically to produce:

$$I=P/E \text{ and } E=P/I$$

From the latter two you can calculate the current when the wattage and voltage are known and can calculate the voltage when the wattage and current (amperage) are known.

Batteries

Although there are standards, batteries come in a variety of sizes and configurations. The materials used also differ. The essential structure is a positive and a negative with an electrolyte in between.

The most popular is the zinc-carbon cell. In this case the outer "can" is zinc and negative; the central post is carbon and positive. This combination produces 1.5 VDC per cell, whatever its size or configuration. The AAA, AA, C and D sizes are all 1.5 VDC (nominal); the 9 V type is actually a multi-cell battery (it has six 1.5 V cells inside the casing).

9 V batteries are the least expensive. They also have a relatively short lifespan and can be greatly affected by temperature. Heat can reduce their shelf-life; cold will reduce their life in service.

All batteries can leak. Zinc-carbon cells display even more of a tendency for this, especially after they have been discharged. It's important to remove the batteries

from any device that is stored for a period of time. This rule is even more important when the batteries being used are zinc-carbon.

More expensive are alkaline cells. They have a longer shelf-life, a longer in-service life. They are less affected by temperature and work in a larger range of temperatures than zinc-carbon cells.

When other materials are used, the actual voltage may be slightly lower. Ni-cad batteries, for example, have a nominal voltage of 1.2 V per cell. These will work in most applications, however, and have the advantage of being rechargeable. Although they are more expensive to purchase, in the long run they may save money.

Besides the initial cost, the greatest drawback with ni-cads is that they work and work, then suddenly go dead. There is little or no warning. With zinc-carbon or alkaline cells, the power level decreases slowly. With a ni-cad, the level stays relatively constant even as the battery is draining, then suddenly drops below the functional level.

Ni-cads require some additional care, especially when it comes to recharging them.

It is preferable to allow the battery to discharge completely before attempting to recharge. The reason is that there is a possibility that if a partially discharged cell is recharged, it can develop a "memory." To over-simplify, this means that the battery "thinks" is has been fully discharged while actually a partial charge is left. When put back into use, it may "see" this spot as fully discharged. Then, instead of giving 6 hours of service, it may give only 2 hours (depending on how much charge was left).

For much the same reason, it's also a good idea to fully discharge the ni-cad before storing it for extended periods. Then, when the cell is to be used again, you'll get better service from the cell if you take the time to go through several charge/discharge cycles.

AC (Alternating Current)

Batteries are used for portable equipment, and sometimes to serve to hold the back-up memory. For most household devices, AC will be used—sometimes directly but usually as the source of electricity for a power supply which converts the incoming AC into the needed values of DC.

The nominal value in the standard household outlet is 117 VAC. This will vary

slightly depending on the time of day. Large appliances and a few other devices require higher voltage and are supplied through two 117 VAC power lines, creating a nominal 234 VAC.

Don't worry if you read about 110, 115, 117 or 120 (and the linked 220, 230, 234, and 240). They are all the same. The use of other numbers is largely arbitrary.

Of greater importance is the power frequency. In North America, a 60-cycle frequency is used; in Europe and other places the frequency is 50 cps (cycles per second). The two are not compatible. If the device is designed for 50-cycle power, you will need a converter for it to work in North America.

This electricity is run through a fuse or circuit breaker. The purpose is to protect the wires in the building, with a secondary purpose of protecting the device plugged into the outlet. The size (value) of this breaker can be almost anything but is most often 15 or 20 A for the standard outlet.

Fuses and/or breakers may also be found in the devices. The size is determined by the unit's needs but will normally be 1 or 2 A and rarely more than 5 A.

Waveforms

A waveform is a graph showing the variation in voltage or current. It is a highly useful graph when it comes to diagnosing circuits in that it tells you what the voltage and/or current is doing in the circuit.

The shape of the wave (such as that on an oscilloscope) may be of any variety. Common are straight, sine (sinusoidal), triangular, ramped, pulsed or complex. They may be repetitive or nonrepetitive.

If repetitive, the time for a wave to complete one cycle is its frequency. This is easily seen in the sine wave, such as is present in the incoming electricity to your home wall outlet. The value rises above zero, drops below it then up again at a rate of 60 times (cycles) per second. This is 60 cps or 60 Hz.

The relationship of time and frequency is expressed by the formula:

$$t = 1/f$$

in which the time (t) is determined by 1 divided by the frequency. By algebraic juggling, $f = 1/t$, in which the frequency is 1 divided by the time needed for one complete cycle.

This gives you the period of the wave. As an easy example, the 60 Hz signal of

standard AC has a period of 1/60th of a second (t=1/60). A signal with a frequency of 3 MHz (3,000,000 cps) has a period of .000003 s (t=1/3,000,000).

It should be noted that 117 VAC isn't really 117 V. The value is constantly changing. It reaches a peak above +117, drops through zero to a value below -117 and rises again. The 117 VAC is the effective (rms) value for one-half of the cycle (either the positive side or the negative side).

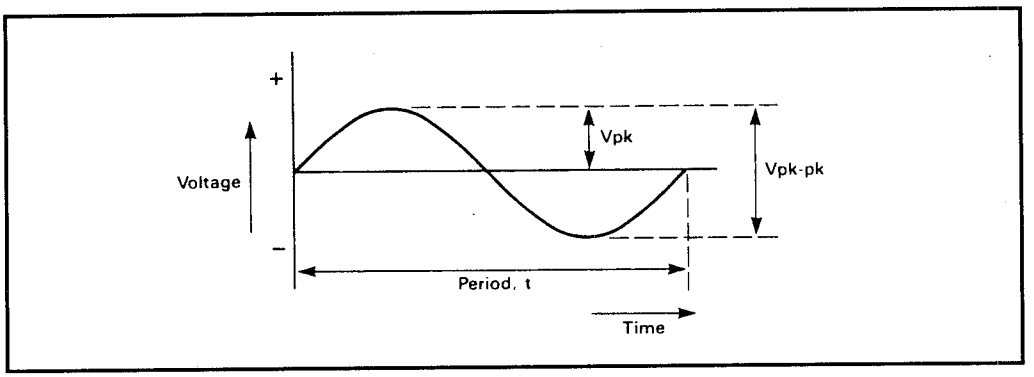

Figure 1: Sine wave parameters

3/2
Electronic Fundamentals

3/2 - QUS
Quantities, Units, Symbols

Quantities

The quantities present in electrical circuits are measured in terms of standard units based on the International System (SI). Units are often abbreviated to a single letter (e.g., A to represent amperage, V for voltage, etc.). The same is true in electrical formulas. The following table lists the units, abbreviations and symbols commonly used in electronics.

Unit	Abbr.	Symbol	Notes
Ampere	A	I	Unit of electric current (a current of 1 A flows in a conductor when a charge of 1 C is transported in a time interval of 1 s).
Coulomb	C	Q	Unit of electric charge or quantity of electricity.
Farad	F	C	Unit of capacitance (a capacitor has a capacitance of 1 F when a charge of 1 C results in a potential difference of 1 V across its plates).
Henry	H	L	Unit of inductance (an inductor has an inductance of 1 H when an applied current changing uniformly at a rate of 1 A/s produces a potential difference of 1 V across its terminals).
Hertz	Hz	f	Unit of frequency (a signal has a frequency of 1 Hz if one complete cycle occurs in a time interval of 1 s).
Joule	J	E	Unit of energy
Ohm	Ω	R	Unit of resisitance
Second	s	t	Unit of time
Siemen	S	G	Unit of conductance (reciprocal of resistance)
Tesla	T	B	Unit of magnetic flux density (a flux density of 1 T is produced when a flux of Wb is present over an area of 1 square meter).
Volt	V	V	Unit of electrical potential (e.m.f. or p.d.).
Watt	W	P	Unit of power (equivalent to 1 J of energy consumed in a time of 1 s).
Weber	Wb	ϕ	Unit of magnetic flux

Multiples and Sub-Multiples

Units

In 1960, the 11th *Conférence Générale des Poids et Mésures* adopted the *SystèmeInternationale d'Unités* as an international system of units, called the SI units. Two changes were made, one in 1967 to change Kelvin to kelvin and 1971 to add the seventh SI standard.

Seven basic quantities are used for the SI units:

- length in meters
- mass in kilograms
- time in seconds
- temperature in degrees kelvin
- current in amperes
- luminous intensity in candelas.
- amount of substance in moles.

The following table gives the terms used for multiples of a unit.

Multiples of a Unit

Multiple	Prefix	Symbol
10^{18}	exa	E
10^{15}	peta	P
10^{12}	tera	T
10^{9}	giga	g
10^{6}	mega	M
10^{3}	kilo	k
10	deca	ka
10^{-1}	deci	d
10^{-2}	centi	c
10^{-3}	milli	m
10^{-6}	micro	µ
10^{-9}	nano	n
10^{-12}	pico	p
10^{-15}	femto	f
10^{-18}	atto	a

The SI system of units is slowly replacing other systems, but the English (Imperial) system is still used throughout North America.

Listed on the following page are some of the standard conversions to convert commonly used units in the English system and the multiplier to convert to SI units.

Conversion Factors

From	To	Multiplication Factor
inch	meter	2.54×10^{-2}
foot	meter	3.048×10^{-1}
yard	meter	9.144×10^{-1}
mile	kilometer	1.609
nautical mile	kilometer	1.852
mile	meter	2.54×10^{-5}
fathom	meter	1.8288
square inch	square meter	6.4516×10^{-4}
square foot	square meter	9.290×10^{-2}
square yard	square meter	8.361×10^{-1}
square mile	square meter	2.590
cubic inch	cubic meter	1.6387×10^{-5}
cubic foot	cubic meter	2.832×10^{-2}
cubic yard	cubic meter	7.645×10^{-1}
gallon (US)	cubic meter	3.785×10^{-3}
gallon (UK)	cubic meter	4.5×10^{-3}
pound	kilogram	4.536×10^{-1}
ton	kilogram	1.0161×10^{3}
pound/sqare foot	kilogram/square meter	4.882
pound/cubic foot	kilogram/cubic meter	1.60185×10
bar	newton/square meter	1.3332×10^{2}
foot pound	kilogram meter	1.383×10^{2}
torr	newton/square meter	1.332×10^{2}
kilogram force	newton	9.8066
pound force	newton	4.4482
British thermal unit	joule	1.0548×10^{3}
calorie	joule	4.1868
horsepower	watt	7.457×10^{2}
kilowatt hour	joule	3.60×10^{6}
therm	joule	1.0551×10^{8}
mile/hour	kilometer/hour	1.609
knot	meter/second	5.15×10^{-1}
electron volt	joule	1.602×10^{-19}
gilbert	ampere	7.9577×10^{-1}
gauss	tesla	1.0×10^{-6}
maxwell	weber	1.0×10^{-8}
footcandle	lumen/square meter	1.0764×10
footlambert	candela/square meter	3.4263
lambert	candela/square meter	3.183×10^{3}

Symbols

	Cell
	Battery
	Fuse
	Fuse (alternate symbol)
	Fuse (alternate symbol)
	Antenna
	Quartz crystal
	Coaxial Cable

	Fixed resistor
	Fixed resistor (alternate symbol)
	Fixed resistor, non-inductive
	Variable resistor
	Variable resistor (alternate symbol)
	Potentiometer
	Potentiometer (alternate symbol)
	Preset resistor

Symbols

	Preset resistor (alternate symbol)
M	Motor (if letter "G" it is a generator)
	Preset potentiometer
	Preset potentiometer (alternate symbol)
	Fixed capacitor
+	Fixed capacitor, electrolytic type
	Trimmer or preset capacitor
	Variable capacitor

	Variable capacitors, ganged
	Feed-through capacitor
	Inductor (coil), air cored
	Inductor with ferrite core
	Inductor with metal/iron core
	Inductor with variable ferrite core
	Transformer
	Inductor, air cored

Symbols

	Inductor, iron cored (choke)
A	Relay coil (A)
A/1	Relay contact 1 for relay coil (A) By convention relay contacts shown in rest position
A/2	Relay contact 2 for relay coil (A)
	Morse key
	Push to make switch
	Push to break switch
	Toggle switch (Single Pole Single Throw: SPST)

	Toggle switch (Double Pole Single Throw: DPST)
	Toggle switch (Single Pole Double Throw: SPDT)
	Two wires crossing and not connected
	Two wires crossing and not connected
	Two wires crossing and not connected
	Two wires crossing and connected
	Two wires crossing and connected
	Three wires joined

Symbols

	Ground
	Chassis ground
	Supply line (positive or negative)
	Coaxial plug
	Coaxial socket
	Plug
	Socket
	Terminal or terminal pin

+ −	Thermocouple
	Thermistor
	Thermistor (alternate symbol)
NTC	Thermistor with a negative temperature coefficient. PTC shows it is a positive temperature coefficient and V shows it is a voltage dependent resistor
	PNP Transistor
	NPN Transistor
	P-channel field effect transistor (FET)
	N-channel field effect transistor (FET)

Symbols

	Unijunction transistor (UJT)
	Single-gate MOS FET
	Dual-gate MOS FET
	Diode
	Zener diode
	Varicap diode (varactor)
	Light emitting diode (LED)
	Photodiode

	Silicon controlled rectifier (SCR) Also called a thyristor
	Bidirectional breakover diode (diac)
	Bidirectional thyristor (triac)
	Filament lamp
	Neon lamp
	Non-inverting amplifier
	Inverting amplifier
	Operational amplifier (op-amp)

Symbols

	2-input AND gate
	2-input NAND gate (NotAND)
	2-input OR gate
	2-input NOR gate (NotOR)
	2-input EXOR gate (ExclusiveOR)
	Schmitt trigger symbol found in Schmitt trigger gates
J, CK, K, Q, $\bar{Q}$	JK flipflop
D, CK, Q, $\bar{Q}$	D-type flipflop

	Analog switch
− +	Meter (not center zero)
	Buzzer or bell (alternating current)
	Buzzer or bell (direct current)
	Loudspeaker
	Headphones
	Microphone

3/3
Troubleshooting Techniques

Introduction

One of the most popular misconceptions concerning electronic troubleshooting is that good technicians are born not made. There is nothing magical in the ability to track down problems. The implication is that the skills of the technician cannot be acquired unless the person already has the electronics equivalent of a "green thumb".

Nothing could be further from the truth. Indeed anyone of moderate intelligence and manual dexterity can successfully carry out even the most complex electronic repairs. The secret lies with adopting the correct apporach to troubleshooting. This is the real key to successful fault finding on electronic equipment.

The goal of this section is to explain the techniques which may be applied in order to locate and successfully repair faults on a wide variety of electronic equipment. Some techniques are appropriate to certain types of equipment. Others may be applied more generally.

With experience, the right technique will become second nature. A trained technician may not even be aware or conscious of which technique is being applied. He or she may seem to get right to the cause without even thinking. By applying a little logic and reasoning, and by gaining experience, you can do the same.

Approach To Troubleshooting

Before examining the most effective troubleshooting techniques, understanding the overall approach is important. Fault finding is a disciplined, logical process in which "trial fixing" should never be contemplated.

The generalized process of fault finding is illustrated in the flow chart of Figure 1. The first step is to identify the defective equipment—and ensure that the equipment really is defective! This latter may sound obvious, but in many cases, the problem may be that the operator isn't using the equipment correctly, that it has become disconnected, or that there is some maladjustment.

Where several items of equipment are connected together, it may not be easy to pinpoint the single item that is faulty. For example, if a word processor is providing no output to the monitor, the operator might assume that something

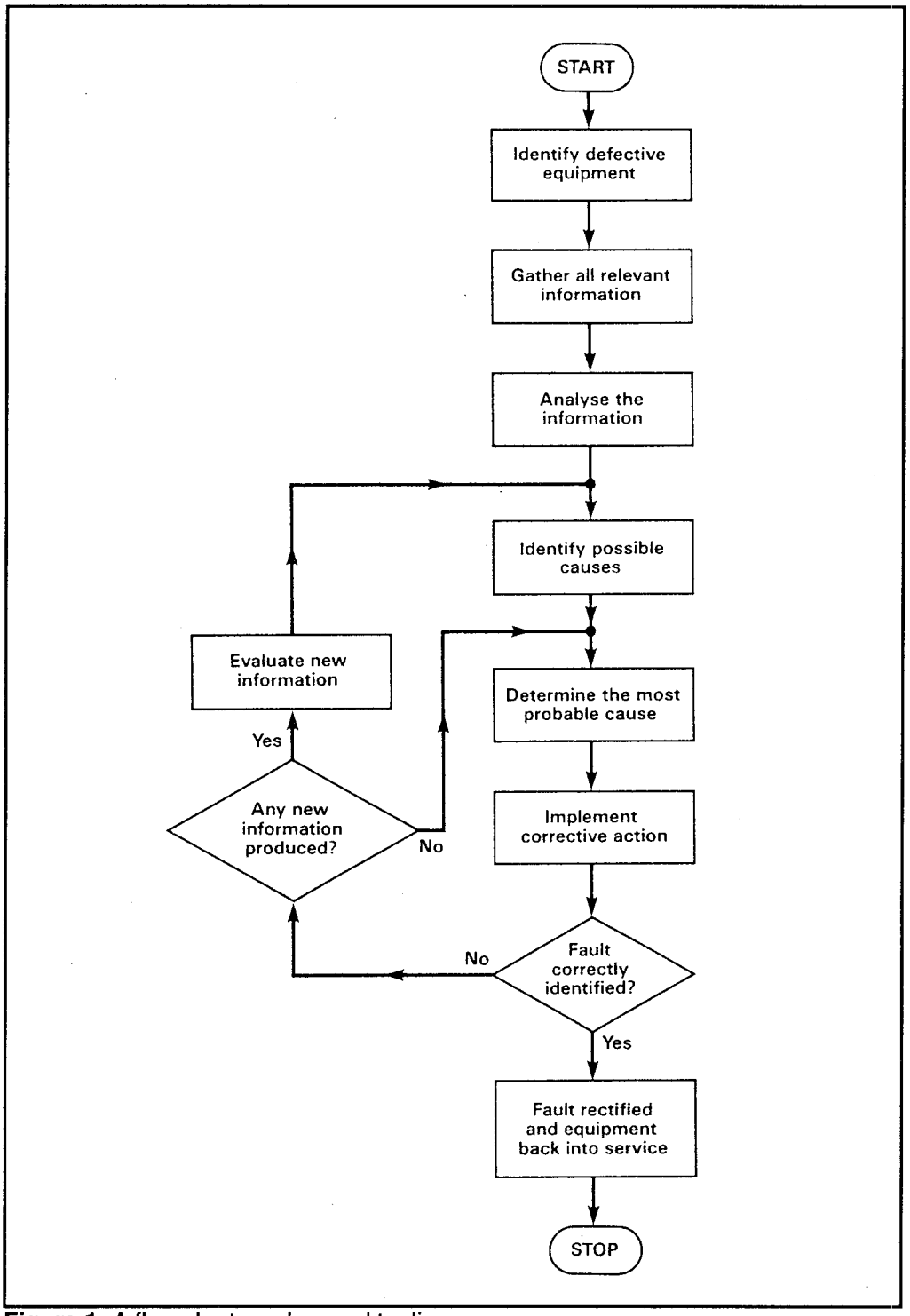

Figure 1: A flow chart can be used to diagnose

is wrong with the computer. This might be, but the trained technician would not make such an assumption. The problem could be with the person operating the system, could be in the software, in the computer, in the monitor driver board, in the monitor, in the keyboard, in the printer or elsewhere.

The second stage is that of gathering all relevant information. This process involves asking questions such as:

- In what circumstances did the equipment fail?
- Has the equipment operated correctly before?
- Exactly what has changed?
- Has there been a progressive deterioration in performance?

The questions are crucial. They should explore all avenues and eventualities, particularly when the technician has no previous experience with the equipment in question. The answers help to build a conceptual model of the symptoms, before and after the problem occurred. General knowledge coupled with knowledge about the specific equipment (e.g., its performance specifications) can often point to a unique cause of the problem.

Once the information has been analyzed, the next stage involves separating the "effects" from the "cause". Here the aim is simply that of listing each of the possible causes. Once this has been accomplished, the most probable cause can be identified and focused upon. Corrective action should be applied to this cause alone. Such action may require adjustment, alignment or component removal and replacement.

Next it is necessary to decide whether the problem has been correctly identified. A component may have failed (open circuit or closed circuit), or a fuse may have blown. Testing can confirm that the cause has been correctly identified. If so, the problem can be corrected and the equipment put back into service. If not, any new information that has been generated can be evaluated before reverting to the selection of the next most probable cause. In practice, the loop may have to be repeated several times before the fault is correctly identified. This is essentially a process of and elimination.

Repair is often a matter of finding out what is wrong by finding out what is not wrong. Then you can make things right.

Always begin with the obvious (such as ensuring that the equipment is plugged in), and progress step-by-step in an orderly fashion. It should be noted that modern equipment is often IC based. At times, the overall circuit is so complex

that some repairs are impossible unless you have access to the specialized testing equipment for that circuit board. Other times, the chip(s) may be soldered to the circuit board in a way that makes it impossible to replace the chip without more specialized equipment. Still other times the ICs are proprietary and replacements are not available. In all of these cases your troubleshooting will proceed to the PC board level, at which point the cure will be to replace the whole board. Often this is the most efficient and most cost-effective method in any case. This has to be decided on a case-by-case basis. Often the deciding factors include the extent of the damage, the complexity of the circuit board, and the cost of the replacement board.

Block Diagrams

Block diagrams are frequently used to show the functional sub-systems present within a complex electronic device. Each major sub-system is given its own block and is identified by its function. The flow of signals is generally from left to right, but this can be modified when necessary. What matters most is that the direction of flow from block to block is correct.

Figure 2 shows the block diagram of an FM stereo receiver. The path of the signal, from antenna to loudspeaker, can be clearly identified as it passes from stage to stage. The amplitude of the signal from the antenna is likely to be in the range of a few hundred microvolts, while the signals arriving at the speakers can be several volts. As the signal passes from stage to stage, its level is gradually increased. (Note that not all stages provide amplification. Several of the blocks have other functions which may actually attenuate, or reduce, the signal. Further, the function of some of the blocks is to modify frequency.)

The FM signal at the antenna and at the RF preamplifier stage have a frequency in the range of 98 MHz to 108 MHz. The output signal from the mixer has a frequency of 10.7 MHz, and contains the same information that is present on the signal at the antenna (and thus at the input to the preamp). After IF amplification, amplitude limiting, demodulation and stereo decoding, the signal fed to the AF amplifier stages are in the audio range—typically between 100 Hz and 10 kHz.

Most of the blocks shown in Figure 2 have input and output. This is essential in the case of amplifier stages. Other blocks, such as the oscillator stage, have output only. This stage produces a signal to be mixed to create the IF heterodyne signal at 10.7 MHz. Similarly, the balance, stereo indicator and VU meter all have input but no output (other than for the operators, which are not electrical outputs and thus do not come into consideration in the block diagram).

The power supply has input and output. The outputs are taken to nearly every

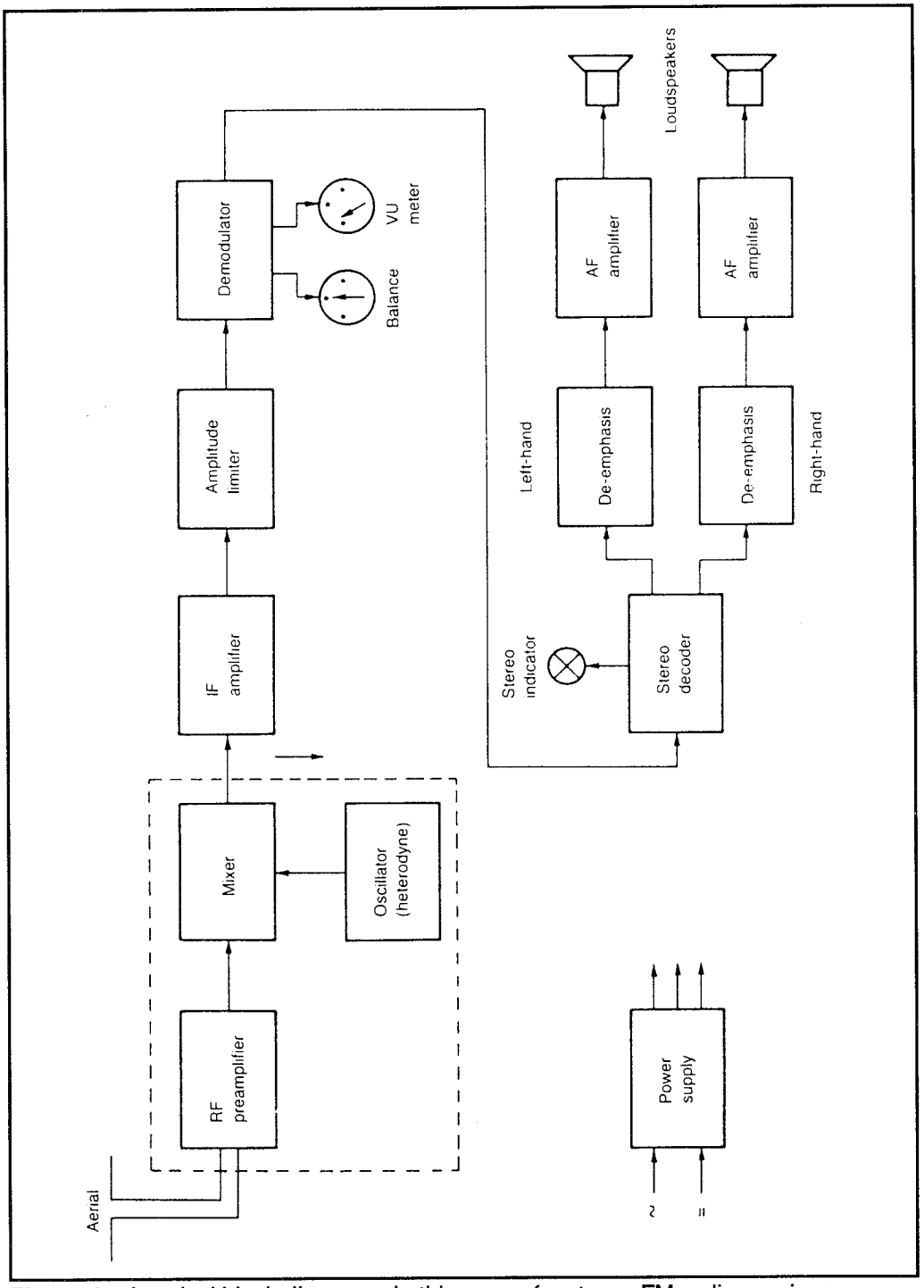

Figure 2: A typical block diagram—in this case of a stereo FM radio receiver

other block. To avoid over-complication the links are not shown on the diagram but are assumed.

Troubleshooting is often based on identifying the functional block which has failed. By making a few simple checks at the points interconnecting the blocks, we are quickly able to locate the block that has failed. Once this is accomplished, the circuitry of that block can be investigated further.

For example, assume that the stereo receiver has developed a problem and no output is produced from either audio channel. The first check should be with the power supply to assure that it is providing the necessary output voltages. The reason is that if the power supply is not functioning properly, one or more stages can also fail to function.

The next step would be to test for and identify signals at various stages, beginning with the most obvious and the easiest. You might consider starting at the speakers. However, since (in this example) both channels are missing, it is relatively unlikely that the speakers—or the cables feeding them—would fail at the same time. The most logical conclusion would be that the failure is in an earlier stage.

If one channel is functioning but the other is not, it may be worth testing for a signal at the speaker (which can be done with a VOM or more simply by replacing the speaker unit and/or cable). If this produces no results, probe at the appropriate volume control.

For example, if the left channel is dead, you can inject a signal at the left channel volume control. A signal of about 500 mV at 1 kHz is a viable test to see if the stereo decoder and de-emphasis circuits are working. If all seems well, the conclusion is that the left channel amplifier is probably at fault.

By dividing the overall device into blocks, you can eliminate blocks and track the problem. Once you have tracked the problem to a particular block, you can dig deeper, this time using a circuit diagram.

Circuit Diagram

In the above example, with one channel failing, the block diagram would lead you to the specific block, which would in turn lead you to the circuit diagram for that block. In this case, your search would bring you to the AF amplifier, as shown in Figure 3.

Circuit diagrams are to the technician what the road map is to the motorist. They

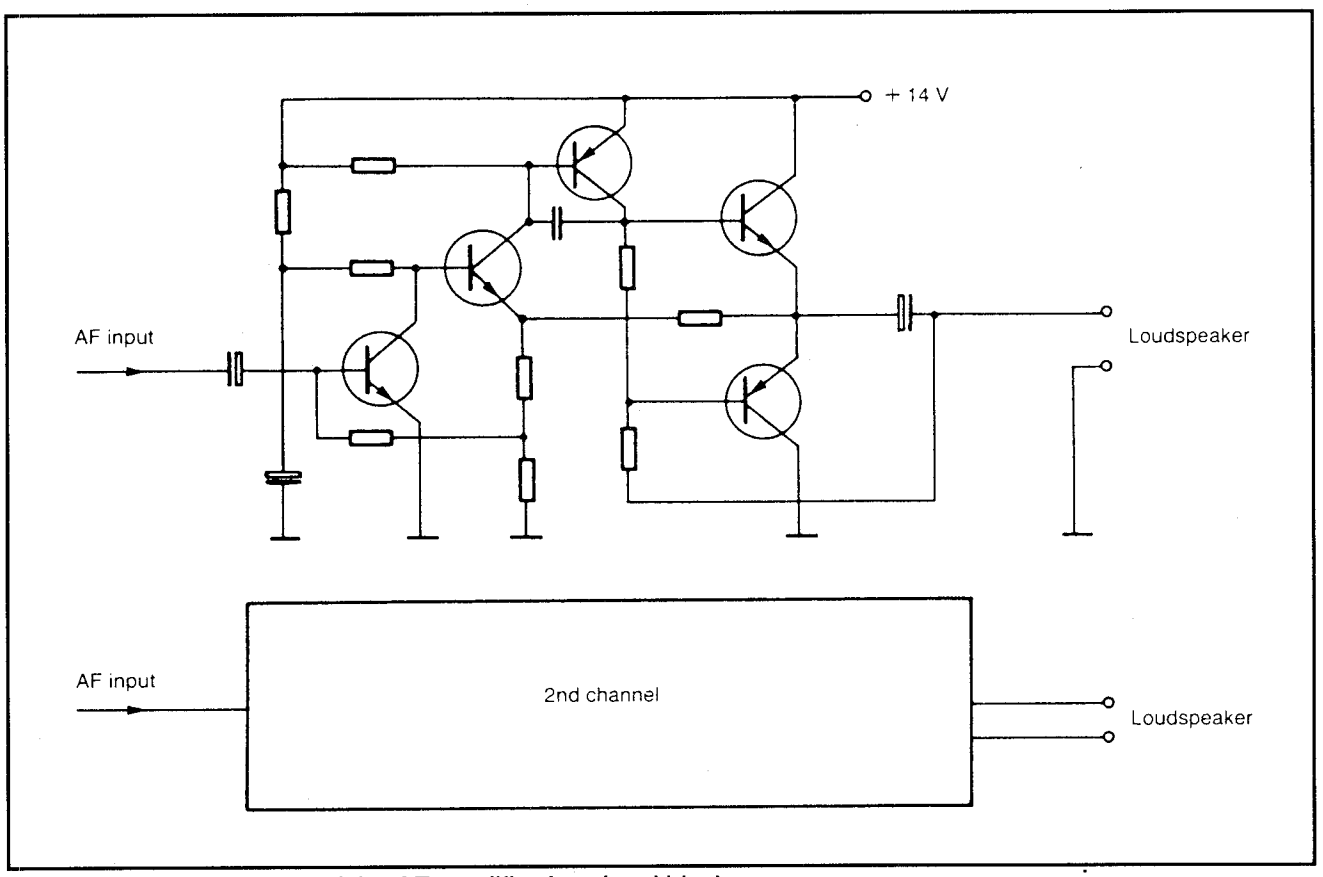

Figure 3: Circuit diagram of the AF amplifier functional block

provide a means of finding the way around a circuit, and clearly show the components used and the links which exist between them. The components are usually identified with a part number (e.g, R1, C12, IC46, etc.) and also with a value or device reference (e.g., 1 kΩ, 100 nF, etc.).

Figure 4 shows the circuit diagram of a simple audible continuity tester. This diagram shows two transistors (connected in what is known as an astable multivibrator arrangement). The transistors are labeled T1 and T2.

The emitters are connected to the negative supply. The collectors (opposite emitter) are taken from R1 and R2 from the positive side of the supply.
The circuit diagram tells you all of this, and often more.

Sometimes a parts listing is attached. This repeats much of the information from

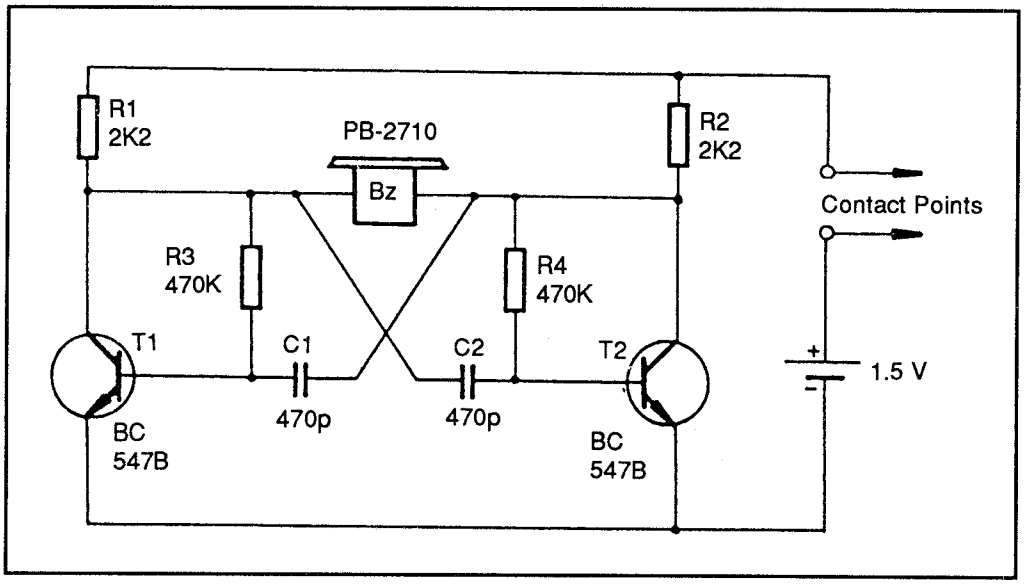

Figure 4: Circuit diagram of an audible continuity tester

the circuit diagram and often adds other information. In the above example, you know that R1 and R2 are 2.2 kΩ resistors but you don't know their tolerance or power rating. A parts listing will show them to be (in this example) of 5% tolerance and 0.25 W.

Reading the diagram depends on which convention is used. In some, for example, the resistor is shown as a saw-tooth; in others the resistor is a rectangular box. Electrical connections may be shown with a dot, while solid lines crossing indicates no connection. Or, the diagram may use solid lines crossing to show a connection and arched lines showing no connection. This may sound confusing but you will soon come to understand the conventions.

As another example, Figure 5 shows the circuit diagram of an electronic battery charger designed for use with 12 VDC lead-acid batteries (such as those for your automobile). This circuit shows a number of different techniques, both analog and digital. The circuit also uses a number of ICs.

The circuit obeys the usual convention of signal flow from left to right. The input voltage is shown at the extreme left, with the output DC voltage at the right. The analog/digital signal processing (based on IC2 and logic gates N1 to N8) also follows the left-to-right convention.

The negative supply is shown as an inverted T rather than as a continuous electrical connection. All components which are shown with the inverted T

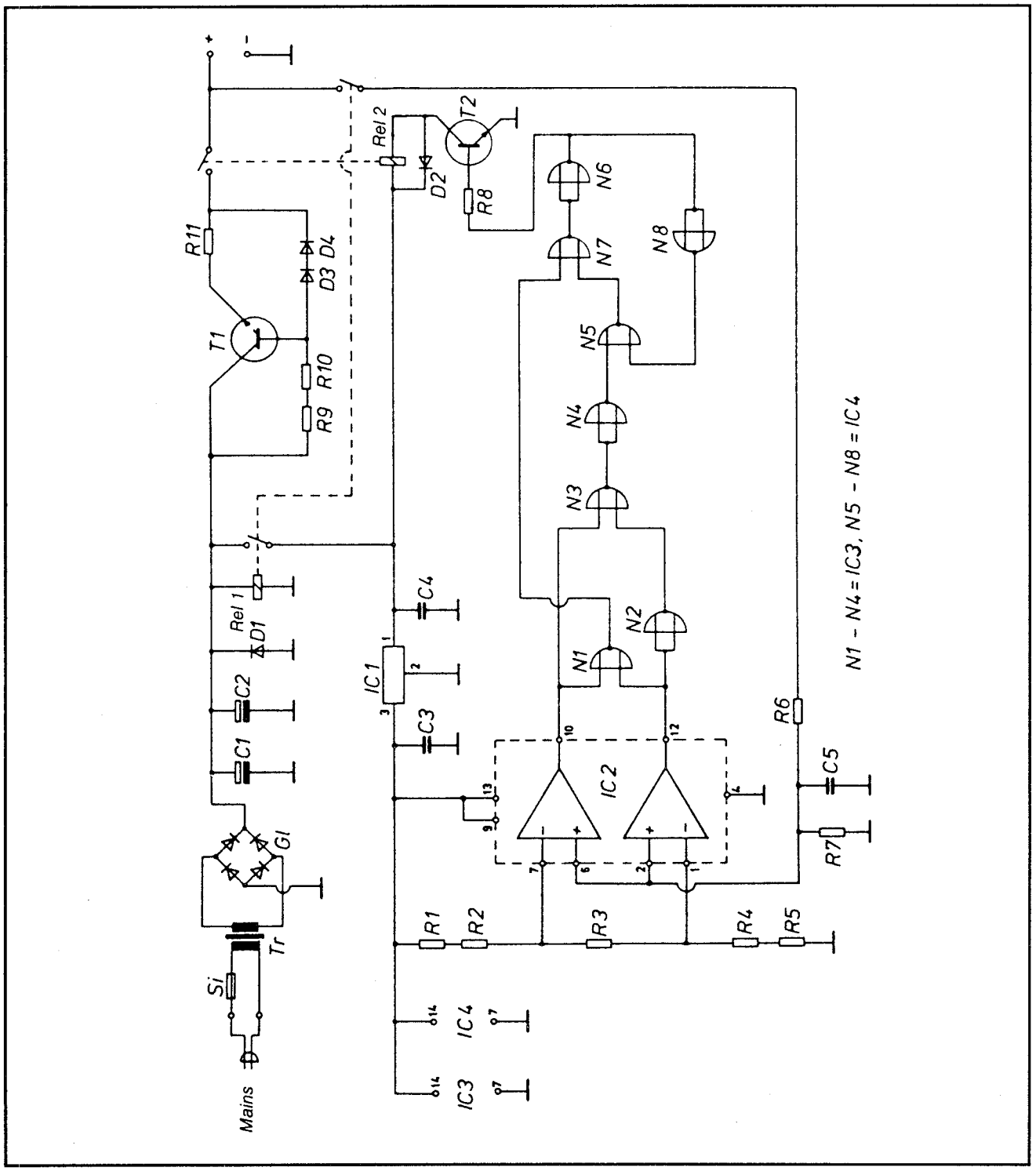

Figure 5: Circuit diagram of a 12 V automotive battery charger

symbol (C1, C2, D1, etc.) are linked together via this common connection. This reduces the number of lines in the diagram and thus reduces confusion.

In some equipment this kind of common connection is returned to the main ground. In this case the ground is isolated, and is called a chassis ground. Care must be taken to not misinterpret symbols indicating common connections. In most cases no harm is done by using a different ground, even if it's not on the same circuit board. All that matters is the zero potential. In other cases (such as television receivers) there may be good reason to maintain isolation between chassis ground and earth ground.

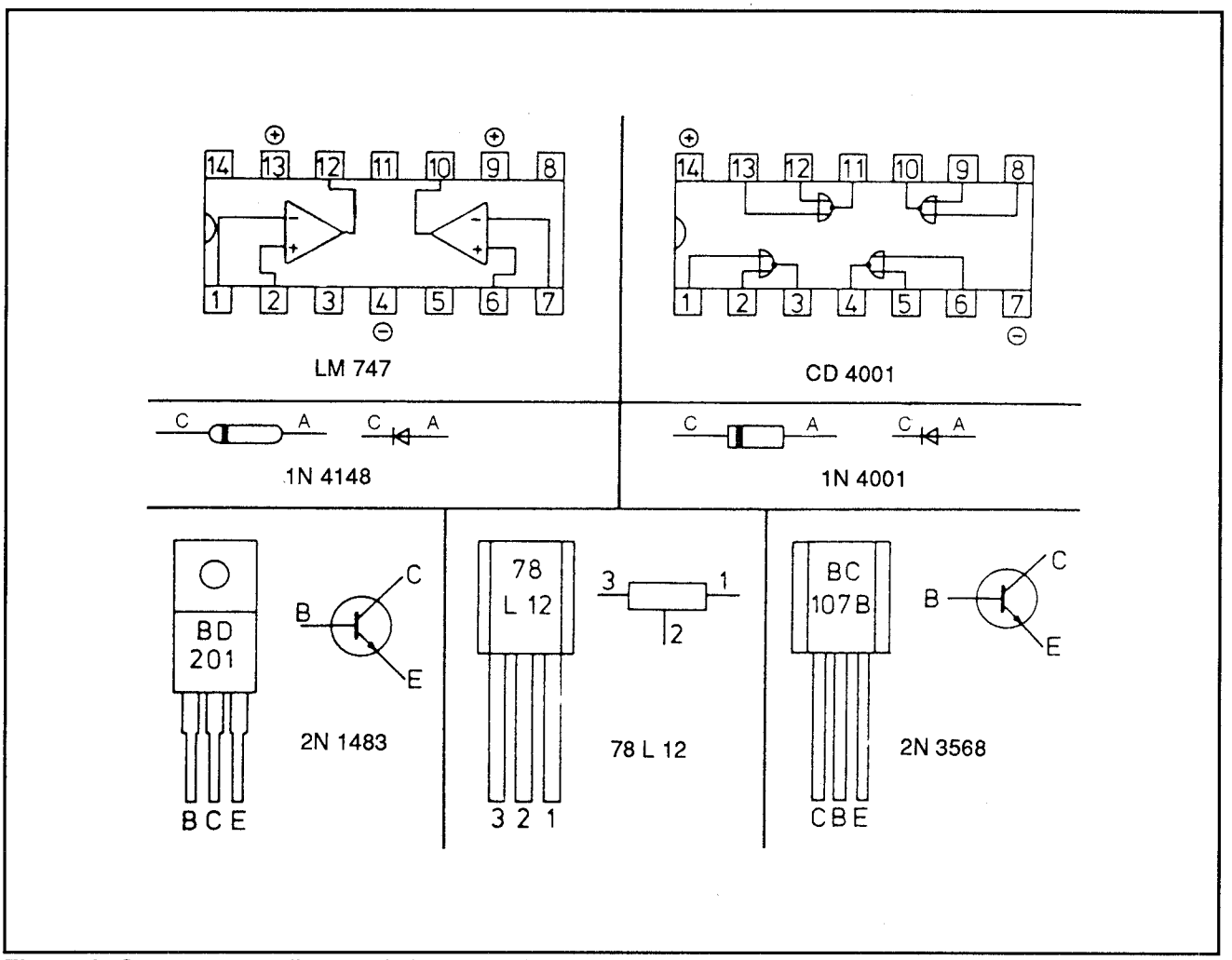

Figure 6: Component outlines and pin connections for Figure 5

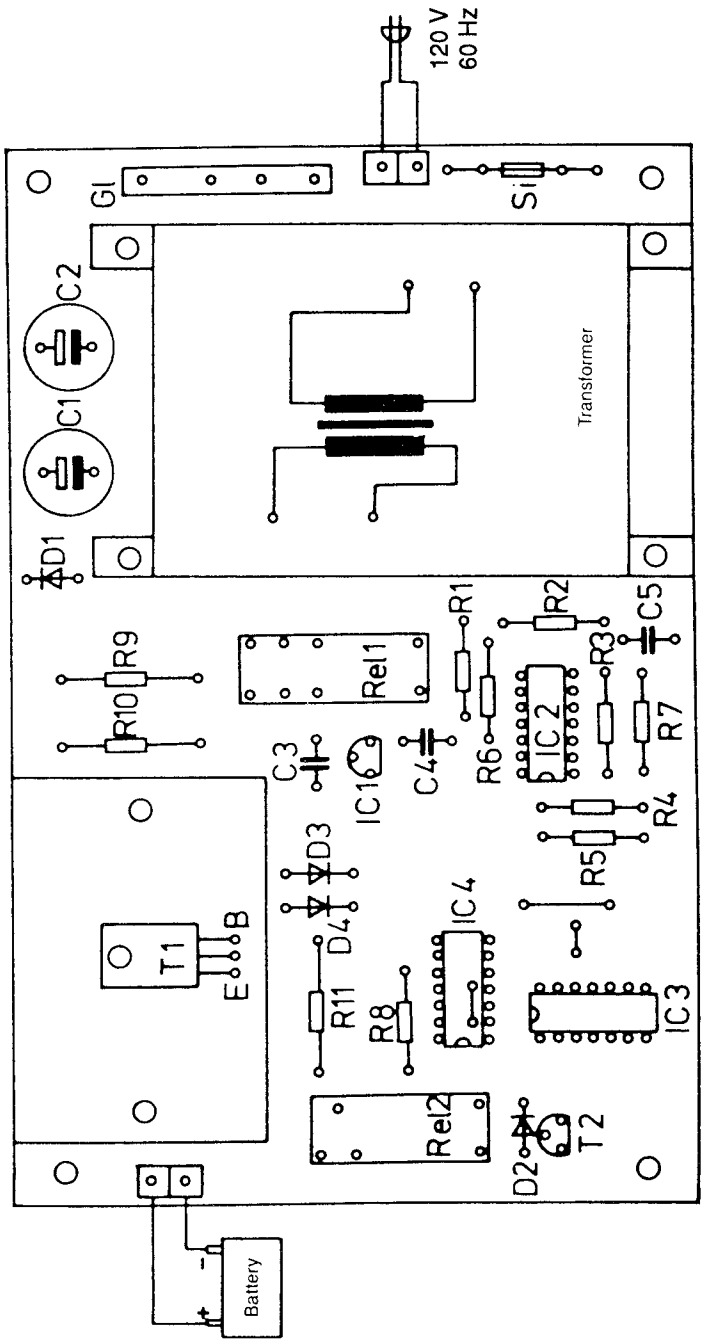

Figure 7: PC board component layout for the 12 V battery charger

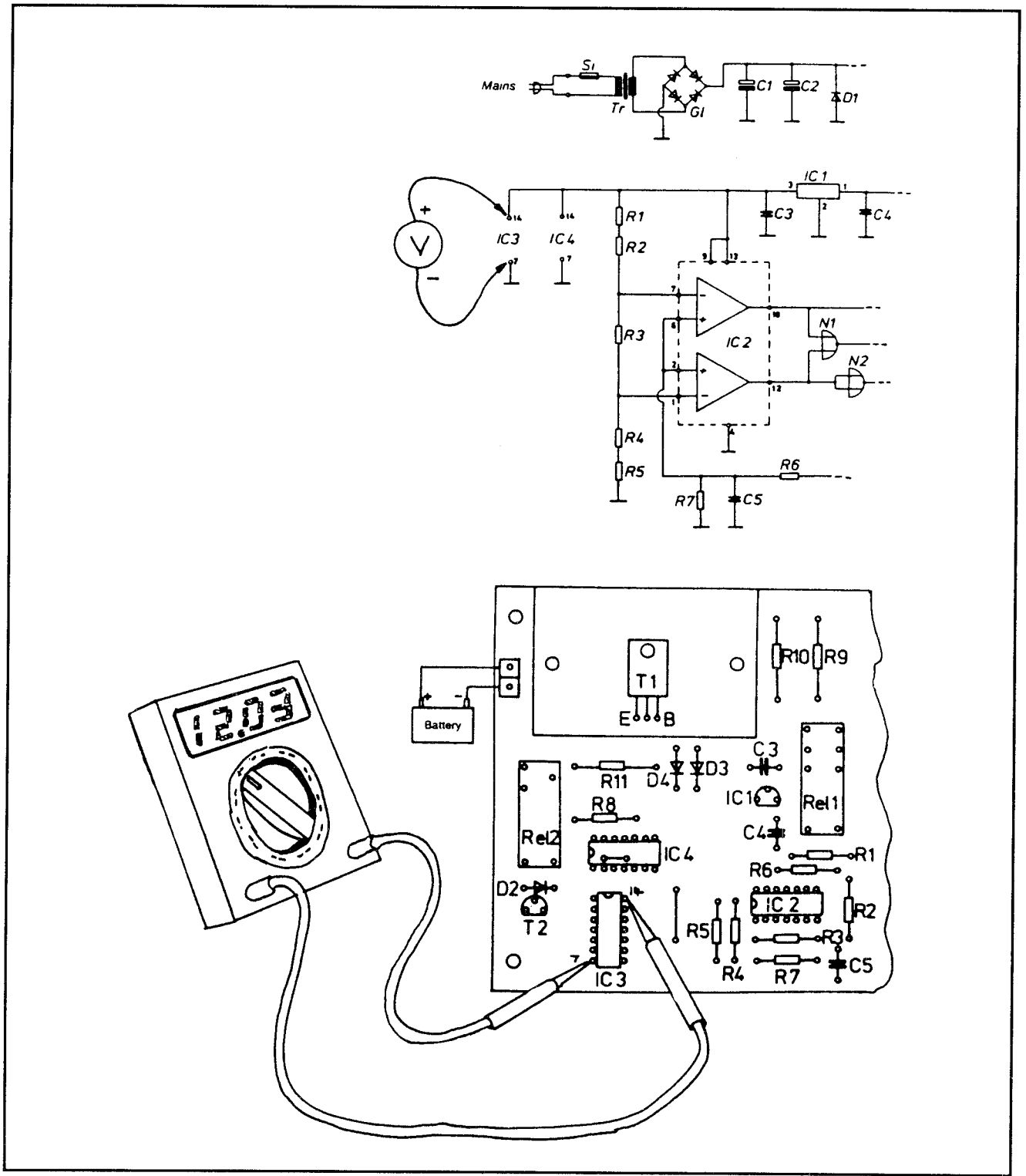

Figure 8: Measure voltage on IC3

Circuit diagrams are often accompanied by detailed component drawings to indicate pin connections. An example of this is shown in Figure 6. Such drawings can often help the technician identify components and their proper placement in the circuit.

Also common is to show drawings of the actual circuit board(s) as in Figure 7. Although the technician see much the same thing looking at the actual board, a less-complicated drawing can often aid in tracking possible problems. Such a drawing is especially valuable when the PC board is not silk-screened with the component labels.

Occasionally the set of circuit diagrams and PC board layouts are accompanied with drawings that show specific tests to be carried out. Figure 8 shows an example of a composit drawing, with the schematic at the top, a partial PC board drawing at the bottom, and the actual test being carried out. (In this case, IC3 is being tested for power between pins 7 and 14.)

Flow Charts

A flow chart for troubleshooting was shown earlier in this section. These charts are used in many branches of electronics, particularly in computing (where they are also used to describe the action of a program). They help to identify the sequence of steps used for operation, or for finding the cause of a problem.

A number of standard symbols are used to accomplish this. Additional symbols might be used to indicate input/output, storage, displays, etc. (Some of these are not used in troubleshooting.) Several conventions are used when creating or following flow charts. Among these:

- Direction of flow is indicated by means of arrows.
- Repeated branches (loops) should be drawn clockwise.
- Symbols must indicate the activity which they represent, and often have the activity written inside, or beside, the symbol.
- Flow charts should have one start point and one stop point.
- Each decision symbol should have one input and two outputs, but should not be based on more than two (compound) decisions (outputs).
- Off-page connectors should be numbered so that flow may continue logically from one sheet to the next.
- The direction of flow should be from top to bottom, or from left to right.

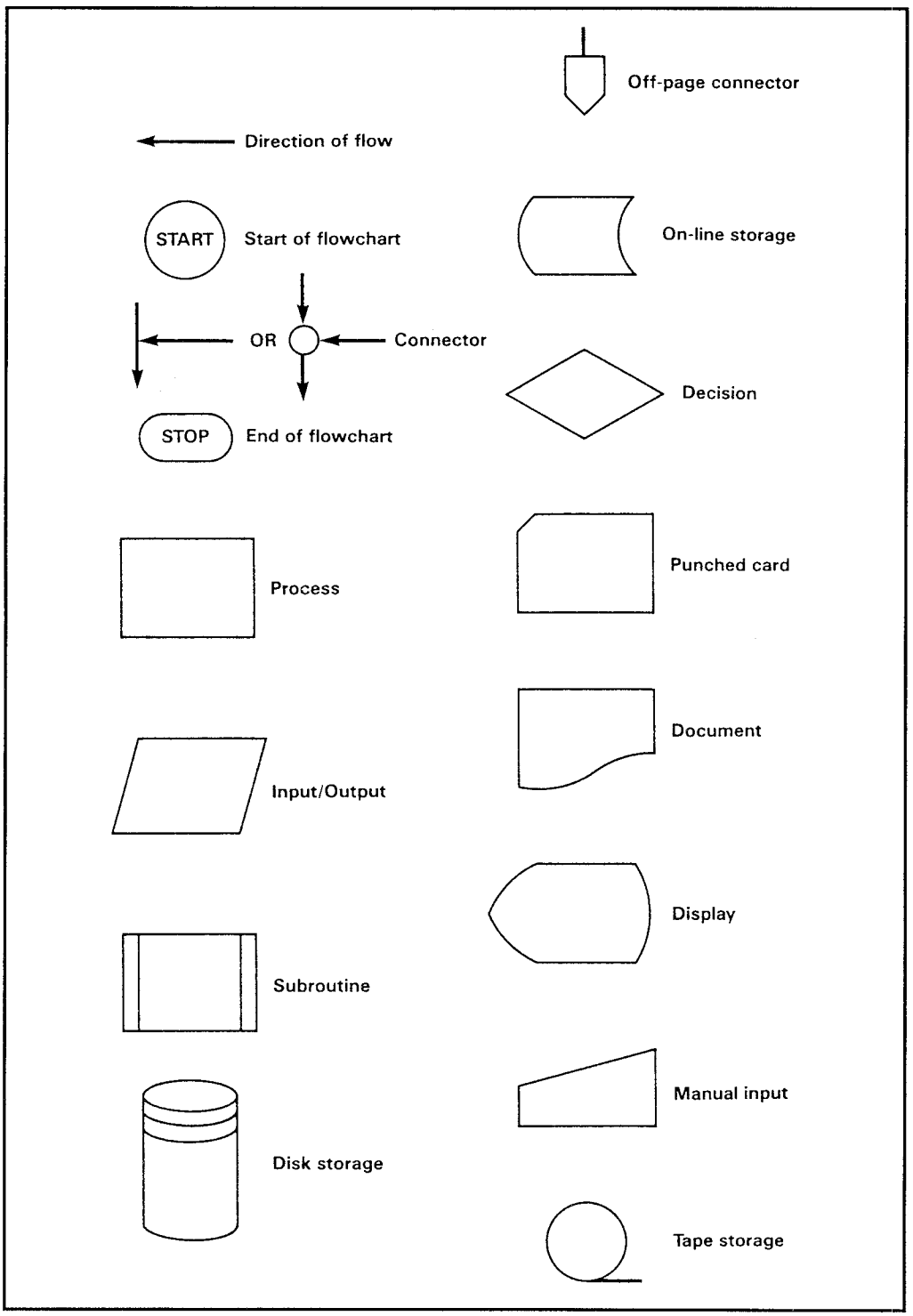

Figure 9: Some typical flow chart symbols

3/3 Troubleshooting Techniques

Component Identification

When troubleshooting to the component level, it is essential that you are able to identify the components correctly.

The wide range of components, packaging and coding can be confusing enough to the experienced technician and can be completely baffling to the newcomer. Fortunately, in the majority of cases PC boards have a silk-screened component level which clearly identifies each component and even certain test points. (The latter may or may not be of value depending on the extent of the labeling. Often you will need the specific service manual for these to be of use.)

For example, if you're not sure just what that small black cylinder is, and the printed legend calls it "Q206," you will know that it is a transistor of some sort. If the component is labelled "C206," it's a capacitor.

Further complicating matters is that different manufacturers use different labels. A transformer is often be labeled T or TR, but both labels denote a transistor.

Although the PC board labels are helpful, they have limitations. As above, you will often need the specific service manual to discover exactly what Q206 is. You know that it is a transistor, but not which type. Sometimes you can guess—most of the time you cannot.

The component will (hopefully) have a coded number or color scheme (see Section *"3/2 Electronic Fundamentals"*). This may or may not be visible. At times the component will be soldered in such a way that the label is down and can't be seen unless you remove the component from the board. Other times it will be badly stamped (blurry) or even worn off.

The code, if present, might be multiple. That is, the component might carry more than one code. (This is particularly common with ICs.) It may have a device code, including the manufacturer's prefix, its generic number, electric/packaging details, etc. (The second may—or may not—be a date of manufacture code.)

As an example, if the device is marked MC6809P and 8931, the first identifies the manufacturer (Motorola) and the IC (6809). The second tells you that the chip was manufactured in the 31st week of 1989.

Worse yet is when the manufacturer has purposely left off or obliterated the marking. This is done to make it impossible for a technician to identify the component's type or function. The reason is often that the manufacturer wants to be sure that its own technical staff does the repair work. (This same reasoning is often used to prevent technicians outside the company from obtaining service

manuals.) In the opinion of most people, this is a bad practice spurred largely by greed. It is also short-sighted in that it doesn't take into account that some end users may not have access to company technicians; nor does it take into account that the company might go out of business. A term you may hear is "boat anchor." This signifies an older piece of equipment that cannot be serviced because information and/or replacement parts are unobtainable, making the equipment useful only for its weight.

Another reason the component marking may not be legible is physical damage, such as from overheating. Unfortunately, if the component is damaged to this extent, you probably won't be able to test it to see what it is and what it does.

Sometimes you can identify an unmarked or damaged component by examining and testing the circuitry around it. In this case it is necessary to identify the circuitry and the signals in and around it (including AC and DC voltages). This technique can often identify the most common components and integrated circuits.

For example, consider the case of an unmarked 14-pin DIP integrated circuit. The most common pin configuration calls for supply connections to be +V (often 5 V) going to pin 14 with pin 7 being the ground.

You can confirm this by using your VOM. First test between pin 7 and a known ground. You should read 0 V. Knowing this you can test between pin 7 and pin 14. If the reading is +5 VDC the device is very likely a digital IC, and is probably either TTL or CMOS.

The next step is to investigate the voltage and/or logic levels at each of the remaining pins. If a logic probe is available, this can provide a rapid indication of the logic levels (0 or 1) present. This gives you the pinout configuration. Hopefully this can be used to give you a match.

Care must be exercised when testing a component in this way. It would be easy to cause voltage and current to flow where it is not meant to flow. If this happens, you might damage a functional circuit.

Component Substitution

In many cases it is possible to replace a failed component with an exact replacement. The use of "exact" is often critical. Unfortunately there are times when an exact replacement is unavailable. This is particularly true if the equipment is old or imported. In such cases you may have no choice but to substitute with a close rather than exact replacement. This is permissible in many cases, provided that several important factors are kept in mind.

In general, the replacement component must have the same value and function as the original. (You probably can't replace a 220 Ω resistor with a 1 kΩ resistor.) Its characteristics (tolerance, stability, etc.) must be at least as good as the original. You can upgrade the component, but never downgrade.

Resistors
Be sure that the replacement component has the same resistance value. Its tolerance must be at least as good, and can be better. While it's possible to replace a resistor of 10% tolerance with one of 5% tolerance, the opposite is not true. Likewise, if the original is rated at 0.50 W, you can substitute with a resistor rated at 1 W, but not with one rated at 0.25 W.

Keep in mind that in some applications other characteristics may also be important. For example, resistors used in the first few stages of an AF or RF amplifier should be of low-noise construction, and those for RF applications should also possess minimal inductance and capacitance.

In the case of testing and measuring equipment, resistors should not only be close-tolerance types but should also be of high stability. If their characteristics change with age (lower stability), over time the instrument will become less and less reliable.

Capacitors
Ensure that the replacement component has the same capacitance value as that of the original, and that its tolerance is the same or better. The working voltage rating must also be the same or better (greater). For example, a 100 μF electrolytic capacitor rated at 25 V maximum working voltage can be used to replace a 100 μF electrolytic capacitor rated at 15 V—but not the other way around.

Tolerance is rarely important when a capacitor is used for smoothing or decoupling. In timing applications (i.e., when the capacitor is used in conjunction with an oscillator, a wave-shaping circuit or a monostable arrangement) tolerance can be important. In such cases only close-tolerance components should be used.

In some applications additional characteristics may be important. Capacitors used in the first stages of an RF amplifier should possess minimal inductance while those employed in high-voltage applications (and in high impedance circuits in general) should exhibit very low current leakage values. Capacitors used for reservoir and smoothing applications should be adequately rated in terms of the AC ripple current that may be applied.

This should be equal to or greater than that of the original component. In the case of test and measuring instruments, capacitors should not only be close-tolerance types but should also be high-stability components. As with resistors, if the capacitors used here change with age or temperature, the instrument will become unreliable.

Inductors
The replacement coil must have the same value as the original. Its current rating is usually unimportant in low-power applications (such as AF filters) but can become critical in higher power applications (e.g., AC power line filters). The frequency range of the replacement coil is largely governed by the material of the core and the physical construction of the component. It is essential to use a core material which is rated for the frequency range concerned. This consideration applies particularly to ferrite cores where certain grades of ferrite become very lossy at high frequencies. If in doubt, always use a grade of material which is more highly rated. For example, a ferrite core rated as effective at 10 MHz is generally be suitable at 3 MHz.

In some applications additional characteristics (stray capacitance, winding loss resistance, etc.) may be important. Inductors used in the first few stages of an RF amplifier or a high gain audio amplifier may require magnetic screening in order to prevent radiation of stray magnetic fields and induced noise and hum. Some experimentation may be necessary in order to find the optimum position for mounting the coil.

Transformers
The replacement should have the same turns ratio, voltage/current ratio and rating as the original component. The power rating (VA) and frequency range are also important.

For audio and wideband applications, the frequency range of a transformer is largely governed by the material of the core and the physical construction. It is essential to use a core material suitable for the frequency range concerned. As with inductors, this consideration applies particularly with ferrite cores. Once again, when in doubt use a material which is better rated. Also as with inductors, factors such as stray capacitance, winding losses, etc. may be of concern. The comments about transformers in this case are the same as with inductors.

Transistors
Transistor substitution is fairly common, particularly with lower cost equipment. In some cases you may have a choice between a number of different transistors. At other times the replacement must be exact.

Among the considerations are:

Current Gain	Important for most applications. The replacment must have a current gain at least equal to the original at the nominal working collector current.
Maximum Voltage	Important especially in high voltage applications, including power supplies, power amplifiers, etc. The maximum rated voltage of the replacement must be the same as, or greater than, the original.
Maximum Power	Important for medium/high power applications, such as power supplies, power amplifiers, etc. The maximum rated voltage must be at least the same, or greater than, the original.
Maximum Frequency	Important for high frequency (e.g. RF) applications. The maximum rated frequency of the replacement transistor must be the same, or greater than, the original.
Noise	This is important in low-level RF and AF amplifiers. In such applications, the replacement should be designated "low-noise."
Package	In general, the package (case) should be the same as the original. This is especially true of the pin configuration. (Even if you know how to test for proper configuration, don't assume that someone else will know later.)

Integrated Circuits

Substitution of ICs usually applies only to general puporse devices, such as logic gates and operational amplifiers. In every case it is important to be sure that the electrical characteristics (e.g., supply voltage and supply current) are compatible, and that the replacement component offers a specification which is at least equal to that of the original. For example, it is usually permissible to replace a standard TTL device (7400) with an improved version (74LS00). Similarly, improved versions of operational amplifiers can usually be used to replace the standard versions. It is important to note that in some applications this is not true, and that such a replacement may create new problems. A typical example of this is oscillation which may result when a high-gain/high-speed device replaces an older, slower, lower-gain component.

Other Components

The same considerations apply to other types of components (diodes, fuses, speakers, etc.). In every case, it is necessary to proceed with caution, and to be sure that the replacement is correctly rated.

3/3 - MFM
Making Floating Measurements

This article shows you how to make floating measurements, a skill that should prove helpful if you are involved in instrumentation, or if you ever have to make very accurate measurements of rather minute voltages or currents. Typically these are the outputs of a chart recorder, a strain guage, a transducer, a thermocouple, or any of a multitude of modern silicon sensors.

Floating Measurements

The best place to start is with a brief description of floating measurements. First, look at the simple grounded measurement shown in Figure 1. E_{in} represents the source being measured together with any noise associated with it and is generally called the *normal mode source*. R_a represents both the source resistance of the normal mode source and the lead resistance of the high lead of the measuring instrument. R_a is called the *high source resistance*. R_b is the lead resistance of the ground lead and is called the *low source resistance*. Current from E_{in}, normal mode current, flows through R_a and Z_1 and the instrument responds to the drop across Z_1. As long as both grounds are alike, both sides of R_b will be at the same voltage and no current will flow through it.

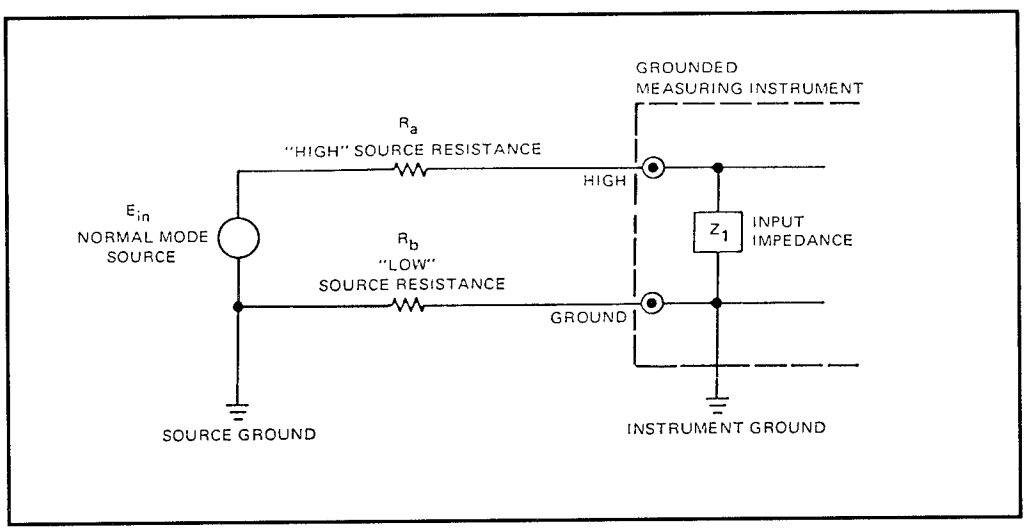

Figure 1: A simple grounded measurement

Different Grounds

Now, suppose that the ground at the measuring instrument and the ground at the source being measured are different, maybe due to voltage drops in the ground lines or currents induced into them. Then the measurement looks like the one in Figure 2.

There is a new source, E_{cm}, the difference between grounds; it's called the *common mode source*, because it's "common" to both the high and the ground lines. Common mode current can go either through R_b or through R_a and Z_1. Since Z_1 is usually much larger than R_a, and since they are both in parallel with R_b, most of the voltage across R_b will also appear across Z_1. All of the common mode voltage will be dropped across R_b, so the instrument will respond to most of it, causing a change in the reading — an error.

Floating Measurements

Measurements with differences between grounds, or common mode voltages, are called *floating measurements* and are said to "float" by the amount of common mode voltage. An ideal floating measurement would be insensitive to the common mode signals; it would measure only the normal mode input, no matter how much common mode it had.

Three Types of Floating Measurements

Figure 3 shows three common floating measurements and how the common mode signals develop. The top one (A) is the simplest. Here the voltmeter and

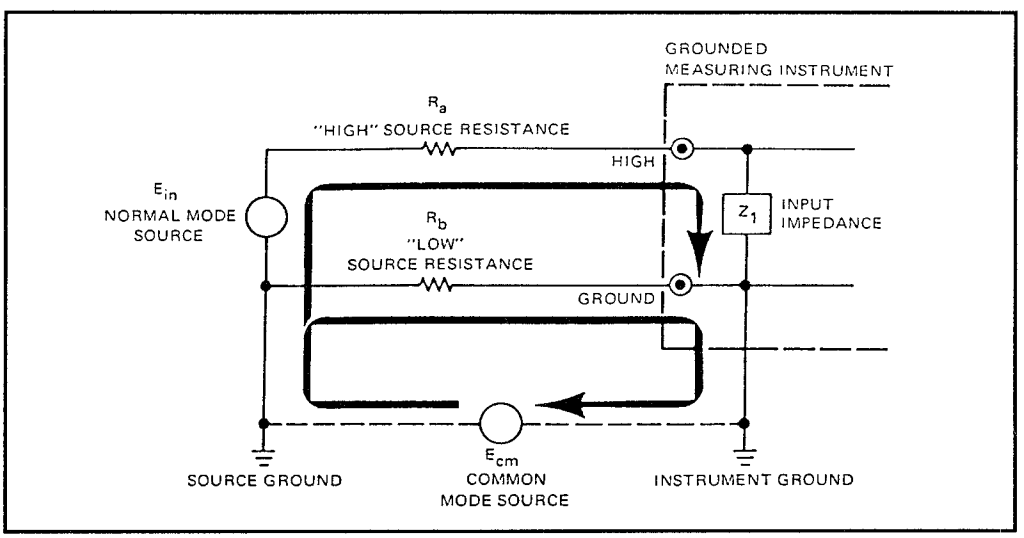

Figure 2: A grounded measurement with a common mode voltage

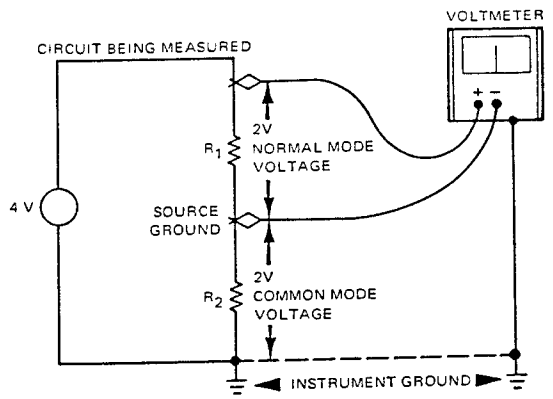

A. Common mode introduced by measuring a voltage referenced above ground

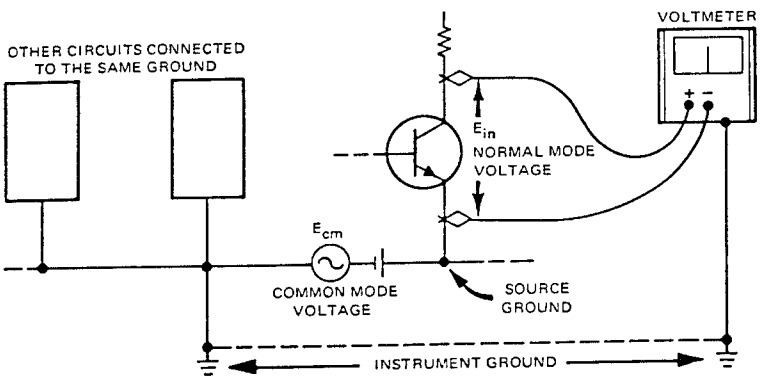

B. Common mode introduced by ground currents

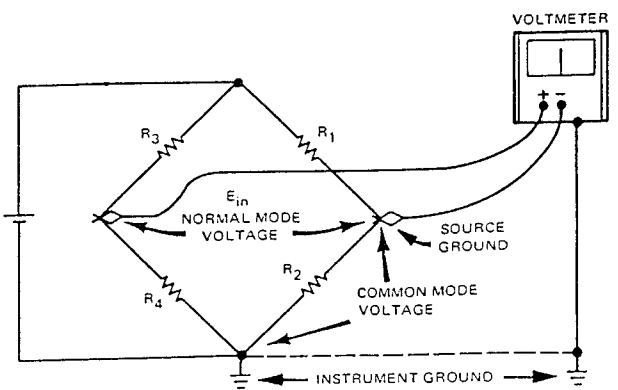

C. Common mode voltages in a bridge measurement

Figure 3: Three types of floating measurements

the circuit being measured have the same ground, but the voltmeter measures a voltage that isn't directly referenced to that ground. It measures the voltage across the top resistor, R_1. The middle one (B) occurs when the instrument ground differs from the source ground.

Bridge Measurements

The bridge circuit (C) at the bottom of Figure 3 appears in transducer measurements where high resolution is needed. Both sides of the bridge are above ground, so no matter how the voltmeter is connected there will be a common mode voltage, and the measurement will be floating. If the voltmeter has poor common mode rejection (CMR) capabilities it can upset the bridge and make the measurement virtually impossible. A bridge measurement requires complete isolation from common mode effects.

None of the measurements in Figure 3 can be made with the grounded voltmeter shown in Figure 2. They all require a voltmeter that rejects the effects of common mode voltages. They require a floating voltmeter.

The Floating Voltmeter

The grounded voltmeter in Figure 2 can be made into a floating voltmeter by adding a shield between the inner circuits and the outer chassis or cabinet. The resulting instrument is shown in Figure 4. It has three input connections: *high*, *low*, and *ground*. *High* is the same as the high terminal in Figure 2; *low* is the inner

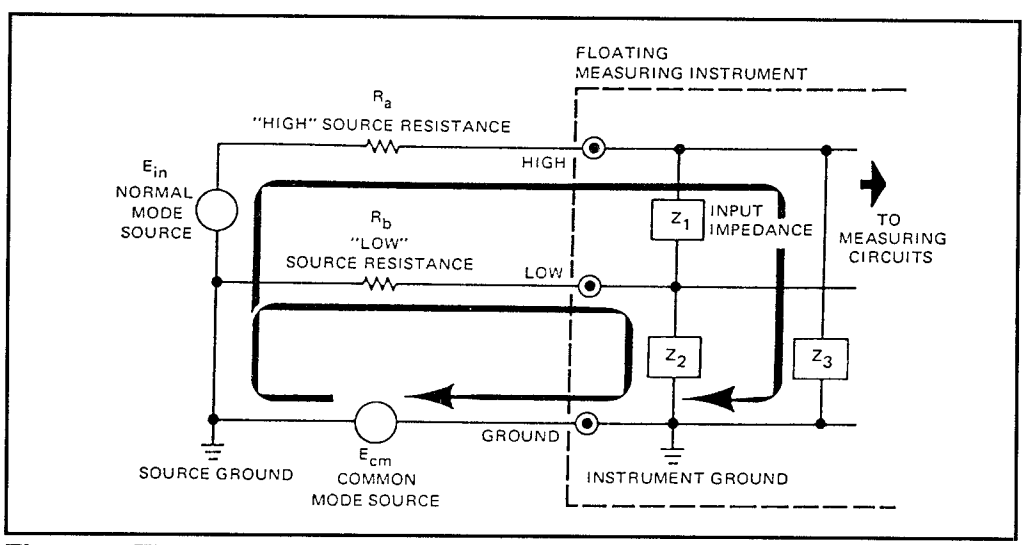

Figure 4: The internals of an "ideal" floating voltmeter

chassis; and *ground* is the same as the ground in Figure 2. It also has two important internal impedances, Z_2, the isolation impedance between low and ground, and Z_3, the isolation impedance between high and ground.

Balanced Floating Voltmeter

If Z_3 and Z_2 were equal and much larger than R_a and R_b, the common mode current would divide between the two loops shown in Figure 4 in about equal amounts. If R_a and R_b were also equal, the voltage drop across Z_3, applied at the top of Z_1 would equal the drop across Z_2 applied at the bottom of Z_1. There would be no difference of potential across Z_1 and therefore no normal mode offset due to common mode voltages — no common mode error. Such a floating voltmeter is called a *balanced* floating voltmeter. If R_a and R_b weren't equal, the voltages at the top and bottom of Z_1 would no longer be equal, and there would be a net difference of potential across Z_1. The result would be a normal mode offset proportional to the difference between R_a and R_b.

In most floating instruments Z_2 and Z_3 are far from equal. Usually Z_3 is much larger than Z_2, so much so that its effects on common mode are negligible. Z_3 practically amounts to an open circuit; thus the instrument looks more like the one in Figure 5.

Parallel Currents

Common mode current flows through the two parallel paths indicated by the heavy lines in Figure 5 and develops a voltage across R_b. The same voltage is dropped across R_a and Z_1, with the largest part of it dropped across Z_1. The meter

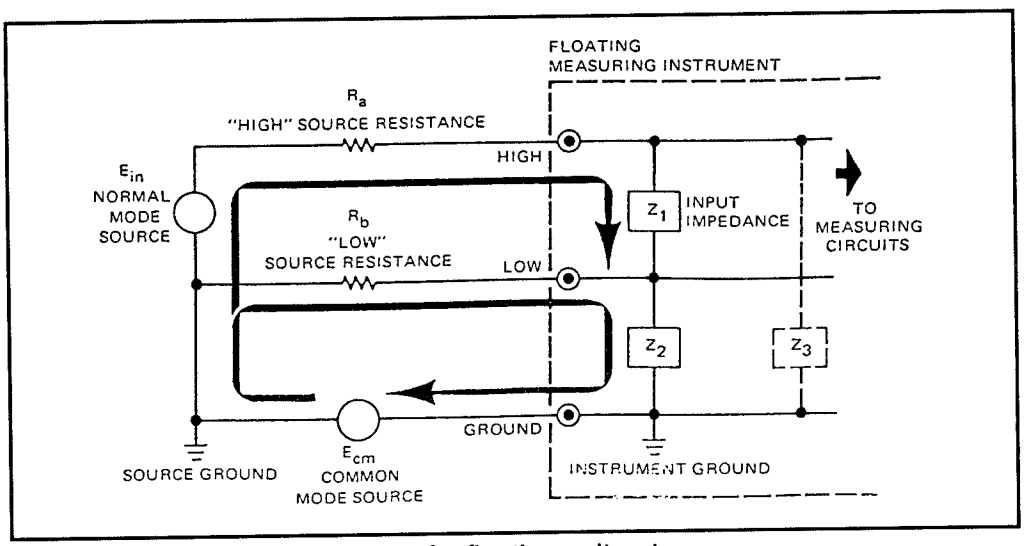

Figure 5: A more realistic view of a floating voltmeter

will respond to the drop across Z_1. Most of the common mode voltage dropped across R_b will become a normal mode offset; so the common mode errors depend almost entirely on the relationship between Z_2 and R_b. If R_b is much smaller than Z_2 the errors will be small.

Lead Resistance

R_b is just lead resistance in most measurements and Z_2 is an isolation impedance between two metallic chassis, amounting to 10^8 to 10^{10} Ω shunted by anywhere from a few thousand pF to a few tenths of a μF. At DC, Z_2 is much higher than R_b, but it falls off gradually with frequency, resulting in poorer immunity to common mode signals at higher frequencies. Also, Z_2 is very dependent on environment. High humidity and just a slight amount of dust or other contamination on the chassis can cause Z_2 to drop by a factor of several thousand or more, which will increase common mode effects by a factor of several thousand.

Reducing the Effects of Common Mode Voltages

A floating meter like the one in Figure 5 can reduce the effects of common mode voltages by anywhere from 80 dB to 120 dB at DC or from 60 dB to 100 dB at line frequency, if the resistance in the low lead can be kept low and the environment can be kept both clean and dry. Such an instrument has enough common mode immunity for analog measurements or measurements made on a 3-digit or perhaps 4-digit digital voltmeter. For measurements requiring higher resolution or sensitivity it may not be adequate. As an example, consider measuring the output of a circuit like a precise strain gauge or thermocouple bridge circuit with a full scale output of less than 100 mV.

Using Bridges

A bridge circuit inherently has a high value for R_b, as much as several kΩ, and also has more than one common mode source. Suppose the circuit to be measured has a 25 mV full scale output and an R_b value of 1 kΩ, and also suppose that the measuring instrument is a 4-digit digital voltmeter with a 100 mV range and common mode rejection (CMR) of 100 dB for an R_b value of 1 kΩ. Finally, suppose that you need at least 1% resolution — you have to resolve at least 250 μV, with a common mode voltage of 120 V.

If the common mode voltage is 120 V and the rejection is 100 dB — a factor of 10^5 — the resulting normal mode offset is 1.2 mV. The DVM just described won't make the measurement even for full scale outputs. For small outputs like 10th scale outputs, the signal is practically buried in common mode. The floating voltmeter has good CMR, but not quite good enough for this measurement; and this is a fairly common type of measurement. High resolution or high sensitivity measurements require a great deal more CMR than the floating voltmeter can

offer. The only kind of instrument with sufficient rejection is the guarded instrument.

The Guarded Voltmeter

A guarded instrument has an additional shield between the low and ground, effectively increasing the low to ground leakage impedance. The extra shield is called the guard and may be connected to the circuit being measured through a *guard* terminal.

Extra Shield

The extra shield divides the low-to-ground impedance into series impedances, Z_2 and Z_3 (see Figure 6), increasing the resistance and decreasing the total capacitance. The resulting higher impedance improves the leakage resistance and the CMR somewhat. With the guard terminal disconnected, the situation is very similar to that of a floating voltmeter except the low-to-ground isolation impedance is larger. Common mode voltage from E_{cm} could pass through the two parallel paths shown in the figure, and again the drop across R_b results in a voltage difference across Z_1, the common mode error. As in the case of the unguarded voltmeter, the error is very small if the isolation impedance ($Z_2 + Z_3$) is large and R_b is small. At DC the added guard shield increases the leakage impedance dramatically, especially in a dry environment. At line frequency, though, the

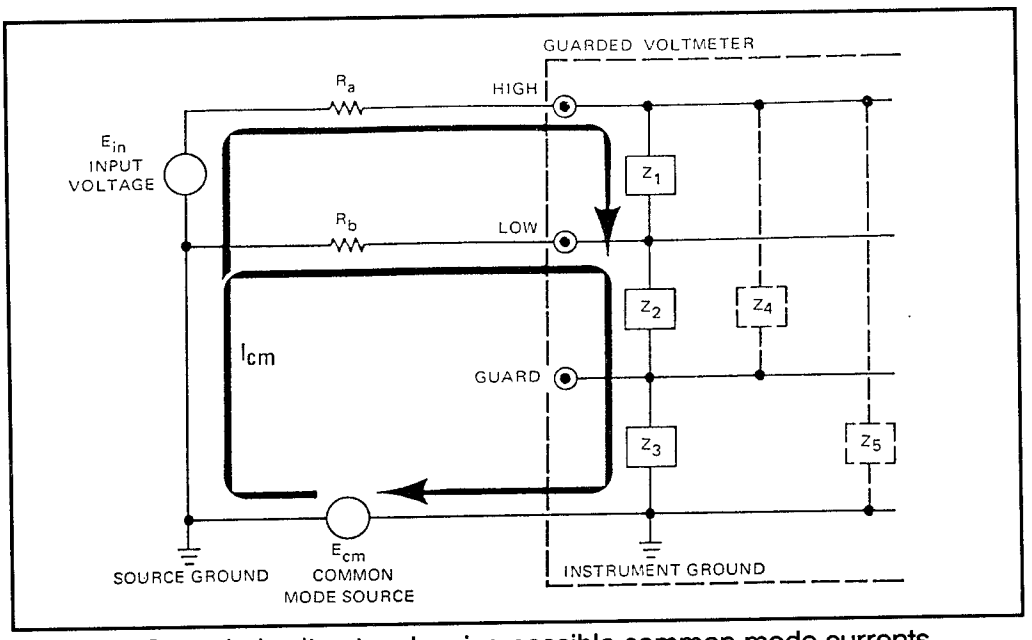

Figure 6: Gurarded voltmeter showing possible common mode currents

added shield increases leakage impedance only slightly. The result is a marked improvement in CMR at DC, but just a slight improvement at higher frequencies. The real strength of the guarded instrument comes from what the guard can do when it's properly connected to the circuit being measured. Figure 7 shows how the guard works.

Shunt Common Mode Current

When the guard is properly connected, it shunts the common mode current around the two current paths shown in Figure 6 and just about eliminates R_b and R_a from the common mode circuit. Virtually no common mode current passes through R_b, so it can't cause much error. Also, since low and guard are at nearly the same voltage, the voltages at the top and bottom of Z_2 are nearly equal. And as long as the voltage difference across Z_2 is held very small, very little current can flow through it. The guard connection improves the common mode rejection significantly over a wider range of common mode frequencies, so that rejection doesn't fall off nearly as rapidly. A good guarded voltmeter will reject common mode signals by more than 160 dB at DC and more than 140 dB at line frequency. There are two relatively simple rules to follow to connect the guard like it's shown in Figure 7:

1. Connect the guard so that it and the low terminal are at the same voltage, or

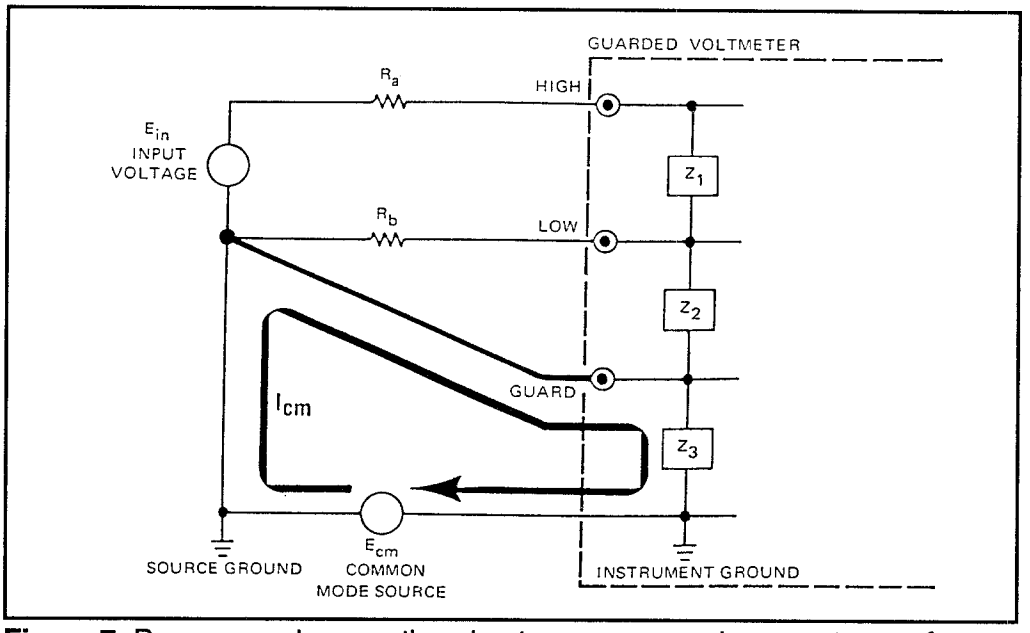

Figure 7: Proper guard connection shunts common mode current away from source resistances

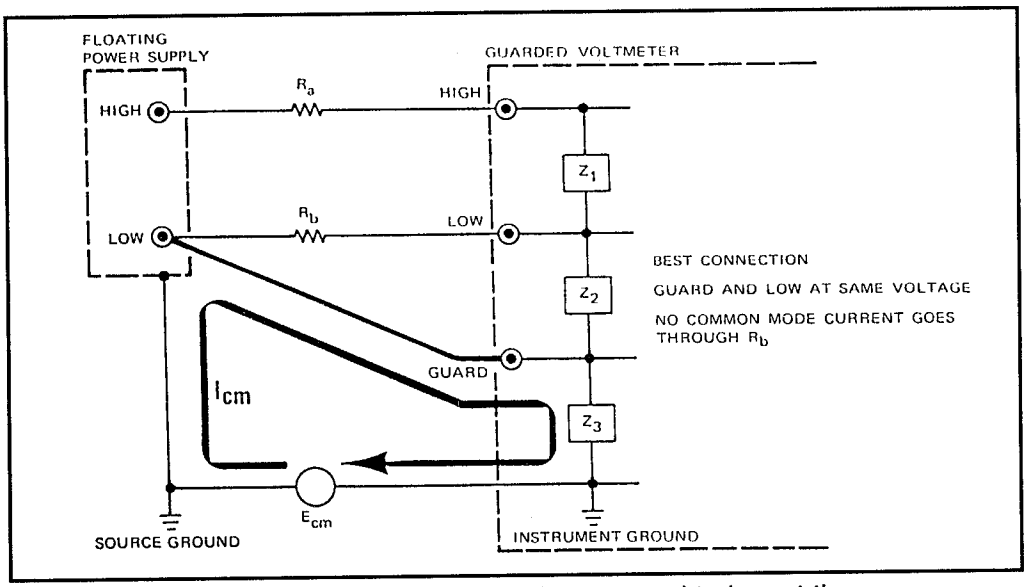

Figure 8: The best connection; the guard connected to low at the source

as close to the same voltage as possible.

2. Connect guard so that no common mode current, or guard current, flows through any of the low source resistance, or more generally, so that no common mode current flows through any resistance that determines the input voltage.

Up to this point we've described floating measurements and shown how they work and how the guard should be connected. That's only the beginning. There are very few measurements, if any at all, where the guard can be connected as described. Usually one or the other of the two rules will be violated, sometimes both. Now we will look at the tradeoffs and approximations you will have to make to minimize common mode effects in a real measurement.

Connecting the Guard

First we'll make a very simple but real measurement where the two rules just about fit and then show what happens when the rules are violated. For example, consider a guarded digital voltmeter measuring the output of a floating electronic power supply (see Figure 8). The power supply has high internal gain and good regulation, making R_a and R_b in this measurement almost entirely due to lead resistance. According to the two rules the best way to connect the guard is as

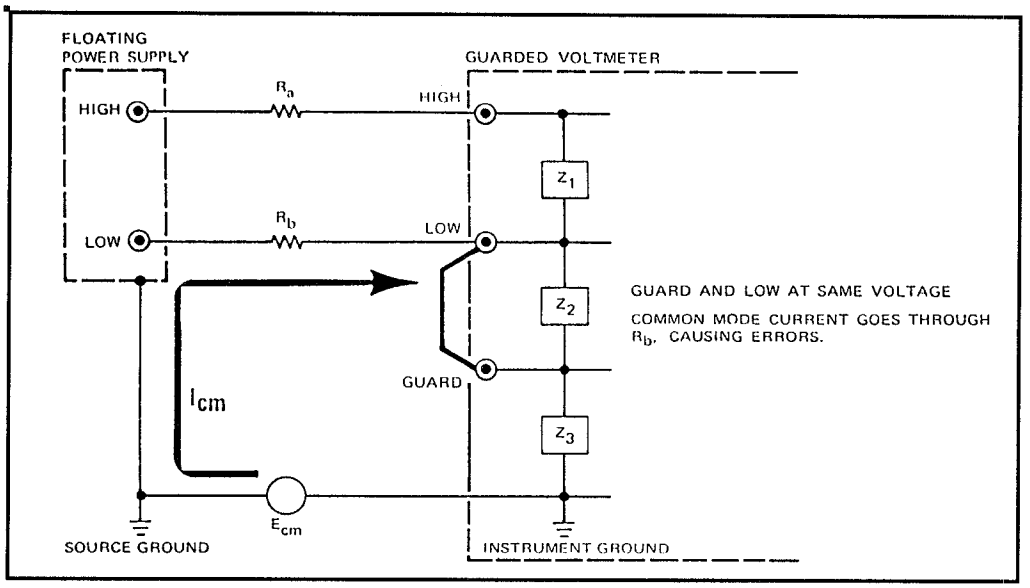

Figure 9: The guard connected to low at the voltmeter

shown in Figure 8; the guard is at practically the same potential as low, and no common mode current passes through any of the high or low source impedances.

Alternative Connections

Figures 9 and 10 show alternative guard connections. In Figure 9 the guard is connected to low, right at the voltmeter's front panel using the guard-low shorting bar provided on most instruments. This is a good approximation to the first connection and appears to be easier. Low and guard are at almost exactly the same voltage, so Z_2 is kept very high; but all of the common mode current goes through R_b, and any drop across R_b will cause a normal mode offset and an error. In systems measurements where the leads can be extra long, R_b becomes more significant and connecting the guard to low at the instrument can cause significant errors. Use this connection only when the leads are short and when the leads are the only resistance included in R_b.

Figure 10 shows what happens when the guard is connected to ground. If the guard is connected to "instrument ground" at the voltmeter (dotted connection) the guard connection shorts out Z_3 and puts guard and ground at the same potential. This eliminates the shunt path for common mode current. All the common mode current goes through R_b, and this current is higher than it might be because Z_3 is shorted. But more importantly, most guarded instruments have lower breakdown voltage ratings between low and guard than they have between low and ground, and most of the common mode is applied between low and

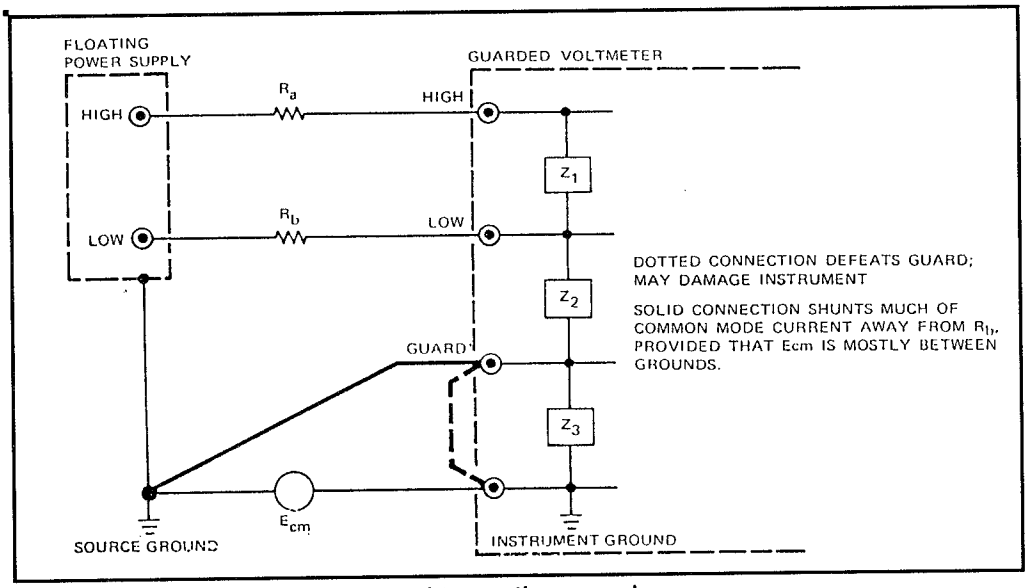

Figure 10: The guard connected to earth ground

guard. Common mode voltages often amount to several hundred volts and the common mode could easily be greater than the low to guard breakdown rating. So don't connect guard to ground at the instrument, doing so may damage your instrument.

Connect Guard to Ground

Connecting guard to ground can be a good connection if the connection is made at the source and if most of the common mode exists between the point where the source is grounded and the point where the meter is grounded. Then the guard connection shunts most of the common mode around R_b and low and guard are at nearly the same voltage. But any common mode voltages generated within the source won't be affected by the guard and their currents will go through R_b.

Just about any connection is better than leaving the guard open. Any connection that diverts any of the common mode current from R_b or brings low and guard closer to the same voltage will improve the CMR. Leaving the guard open can damage an instrument. The breakdown rating between low and guard is lower than the one between low and ground, less than 300 V for most instruments and sometimes as low as 50 V. If the guard is left open, the common mode voltage will divide between the low to guard impedance (Z_1) and the guard to ground impedance (Z_3). Since they are about the same size, about half the common mode will drop between low and guard. Large common mode voltages could easily drop enough between low and ground to exceed the breakdown rating.

Injected Currents

Not all common mode problems come from the circuit being measured. Some common mode sources are within the measuring instruments, caused by currents induced into the ground or guard shields by the power transformer windings. Internal common mode sources are generally constant current sources and force *injected currents* into the circuit being measured. They appear in virtually all line-operated floating instruments, between low and ground in unguarded instruments and between low and guard in guarded instruments. Figures 11 and 12 show the results.

Install Capacitor

In the unguarded instrument (Figure 11), the injected current flows out of the low terminal, through the low source resistance, and back to ground, dropping a voltage across R_b. The result is an offset in the reading. The only thing that can be done to cut down the effect of injected current is to install a fairly large capacitor between low and ground in the instrument. Such a capacitor would shunt the injected current around the source resistance, but if it were too large it would degrade Z_2 seriously and ruin the instrument's AC CMR. Most unguarded floating voltmeters have a capacitor in the 0.01 μF range already installed. The value is selected to maximize AC CMR while minimizing the effects of injected current, and results in a tradeoff between the two.

In the guarded instrument (Figure 12) the injected current goes out the low

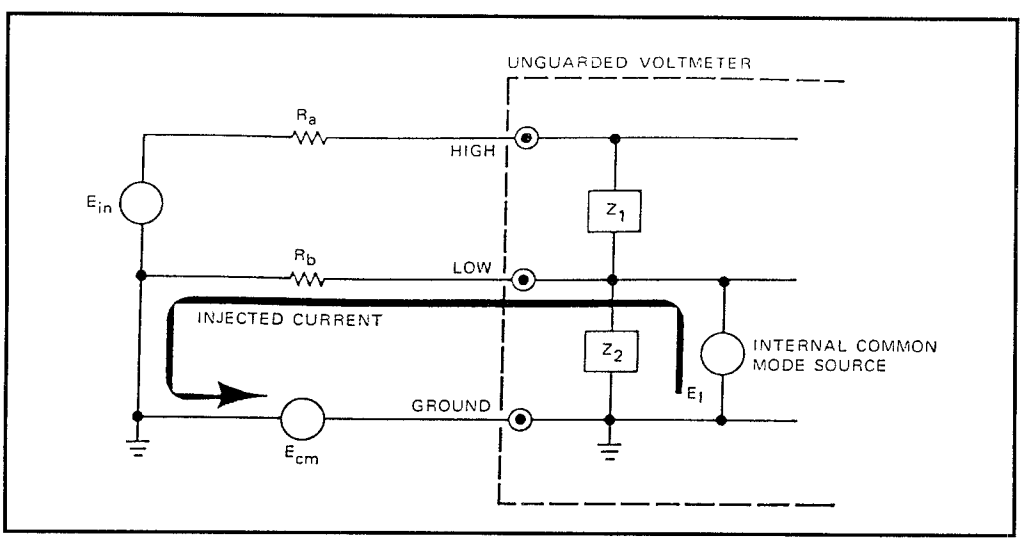

Figure 11: Injected current in an unguarded instrument

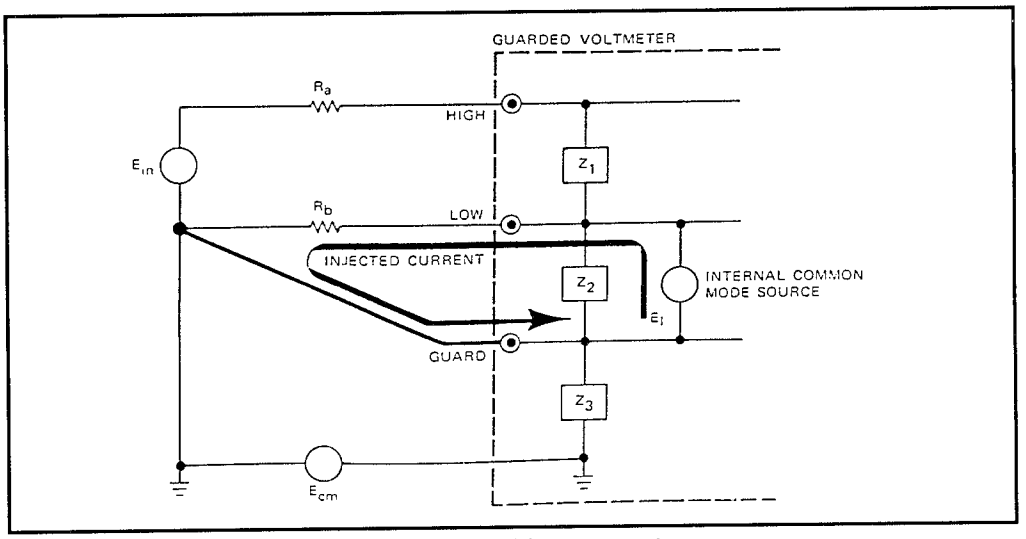

Figure 12: Injected current in a guarded instrument

terminal, through R_b, and back into the guard terminal, again causing an offset in the reading. But note that the injected current only goes through R_b if the guard is properly connected. If the guard were connected someplace else, to the low terminal right at the front panel, for example, the injected currents would not go through R_b. So connecting the guard to maximize CMR also maximizes the effects of injected current. Connecting it to minimize injected current effects cuts down on the CMR.

The situation isn't as bad as it looks. First, guarded voltmeters have much less injected current than unguarded ones, usually only 50 to 100 pA. Also, injected currents are always at line frequency where most voltmeters have very good normal mode rejection. So the voltmeter's response to injected currents will be low, especially if the voltmeter is an integrating DVM with nearly infinite noise rejection at line frequency.

Connect Low and Guard

Also, if R_b is small, the low and guard terminals can be connected right at the instrument without much loss in CMR. Then, if the input voltage can be set to zero or shorted out while the guard is connected properly, the offset due to injected currents can be read on the voltmeter's display and used as correction, or perhaps eliminated altogether with a zero adjustment. Finally, injected current can be measured directly by connecting a small-valued resistor between low and guard and measuring the voltage across it. The measured value can then be used to estimate the resulting offset if R_b can be estimated.

Specifications

CMR specifications are figures of merit; they are useful for comparing the CMR capabilities of two instruments, but they won't predict how much common mode error a given measurement will have. Also, they don't tell if a given instrument meets the requirements of a given measurement unless a great deal is already known about the measurement, because common mode errors are so dependent upon the characteristics of the measurement and on how the instrument is connected. Fortunately there is some uniformity among manufacturers: there are only two basic ways of specifying CMR.

True and Effective CMR

One way to specify CMR is to specify *true* common mode rejection, and the other way is to specify *effective* common mode rejection. Both methods have two things in common. First, CMR is specified with the guard connected properly, according to the two rules already stated; and second, CMR is specified with a given value of either R_b or the difference between R_a and R_b, usually 1 KΩ.

Most manufacturers do not explicitly state whether or not the voltmeter is balanced, and the CMR is specified "with a 1 KΩ unbalance in either lead." This expression means that if the instrument is balanced, the CMR is specified with 1 KΩ difference between R_a and R_b regardless of which is larger; if the instrument is unbalanced the CMR is specified with 1 KΩ in the low lead since that's the worst case. Since the specifications don't tell if the instrument is balanced, the CMR should be checked with a 1 KΩ resistor in the low lead.

True CMR

True CMR, or *pure* CMR is the ratio (in dB) of the common mode signal to the normal mode signal it produces with a 1 KΩ unbalance in either the high or low lead. It is an indication of the inherent rejection ability of the basic instrument and does not include the effects of any noise rejection capabilities of the measuring circuits. It is especially important when the input is to be connected to other instruments. For example, if the input must go to an amplifier in parallel, the true CMR gives an idea of how much common mode offset will appear on the amplifier input.

Effective CMR

Effective CMR is the ratio (in dB) of the common mode signal to its resulting effect on the measured value or read-out with a 1 KΩ unbalance. It combines the true CMR effects with the instrument's noise rejection capabilities, and is usually the most important specification, because it directly indicates how common mode signals affect the measured value. Figure 13 shows how true CMR and noise rejection combine to make an effective CMR specification.

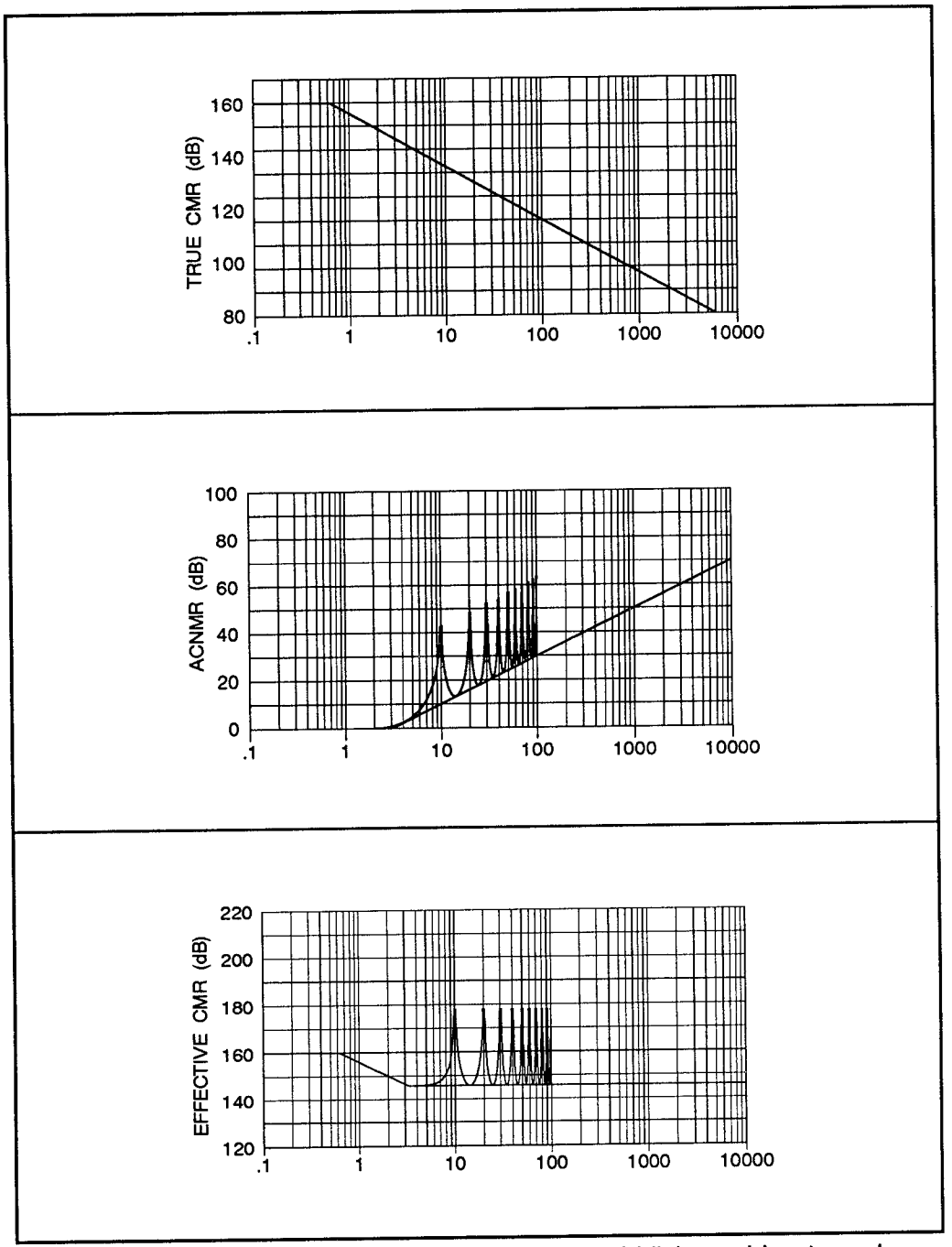

Figure 13: True CMR (top) and noise rejection (middle) combine to make an effective CMR specification (bottom)

The graphs of Figure 13 are the specifications of an instrument called an integrating digital voltmeter. The instrument has points of extremely high noise rejection whenever the noise period is the same as the integration period. Notice that at DC the true and effective CMR are the same; therefore, the instrument has no noise rejection at low frequencies. Effective CMR falls off the same as the true CMR until about 2 Hz when the voltmeter's noise rejection takes effect. After that the effective CMR is the sum of the two effects. If one CMR and the noise rejection specification are known, then the other CMR specification can be derived by addition or subtraction.

1 KΩ Unbalance

Both true and effective CMR are generally specified with a 1 KΩ unbalance; this is just an accepted convention, any value could have been used. But a different value of unbalance will result in a different value of CMR; the larger the value the worse the CMR and vice versa. Also, the relationship is linear. So an instrument specified as having CMR of 180 dB with 100 Ω unbalance is the same as an instrument specified as 160 dB with 1 KΩ unbalance.

The amount of common mode voltage an instrument can accommodate is not often specified, but is very important, because exceeding recommended levels may damage the instrument. Most instruments can operate with 500 to 700 V between guard and ground and with anywhere from 50 to 300 V between low and guard. The low to guard voltage isn't as critical because the instrument, when

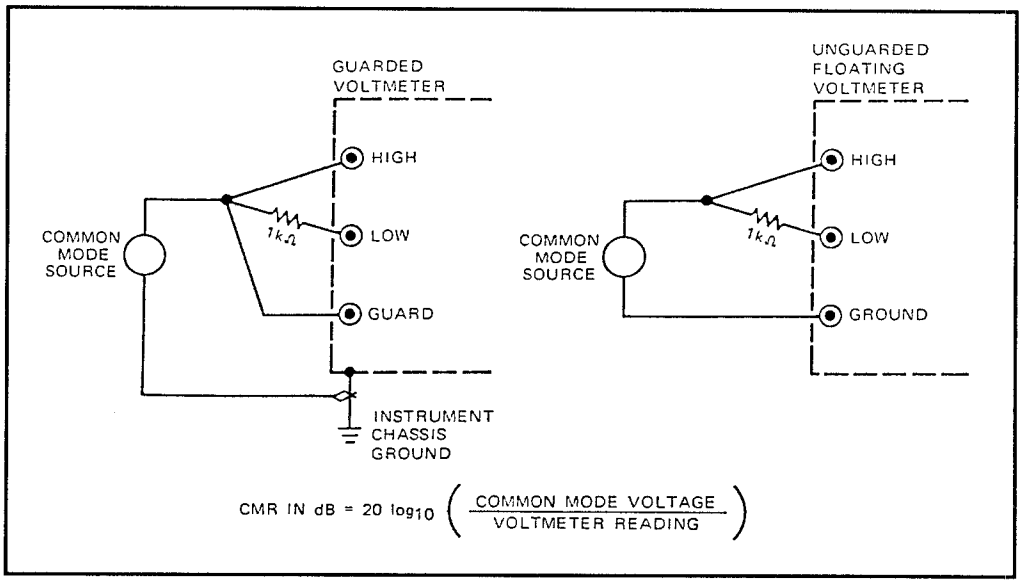

Figure 14: Effective CMR checks

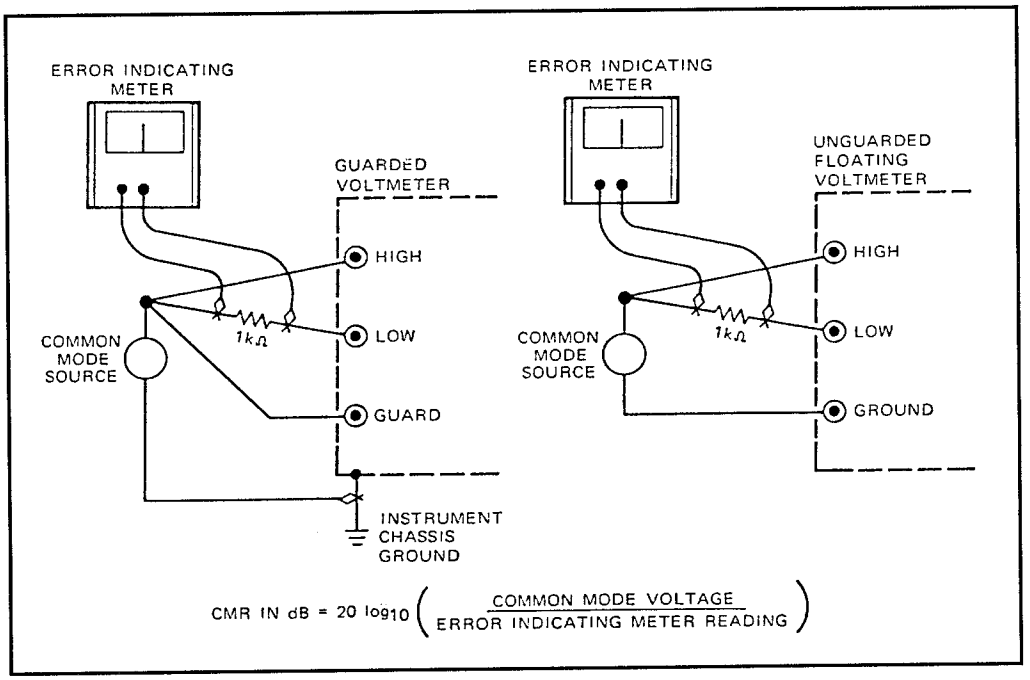

Figure 15: True CMR checks

connected properly, should have low and guard at the same potential.

Measuring Common Mode Rejection

Figure 14 shows effective CMR checks and Figure 15 shows true CMR checks for both a floating unguarded voltmeter and a guarded voltmeter. In each case, the measurements are made with a 1 KΩ unbalance resistor placed in the low lead. These checks can be used to determine if the instrument is balanced by doing the check with the unbalance in the low lead and then with the unbalance in the high lead and noting any differences. If the two CMR values are equal, the instrument is balanced.

Effective CMR Check

The effective CMR check is the simplest and the most usable because it employs the instrument's read-out to indicate CMR errors. The source is first a DC supply and then a variable frequency oscillator with a frequency range up to about 1 kHz. When checking instruments with very high CMR (≈160 dB), it's hard to get an indication on the meter read-out without using dangerously high voltages. Then it's a good idea to increase the value of the unbalance resistor to get greater CMR errors. Remember that CMR varies inversely with the value of the resistor.

The true CMR check is somewhat more difficult because an additional "error indicating meter" must be used to directly measure the normal mode offset generated by the common mode source. The meter used must be floating, preferably battery-operated, and should have enough sensitivity to read the normal mode offsets. If it hasn't enough sensitivity, the normal mode offset can be made larger by increasing the unbalance resistor. Try to make true CMR checks with the voltmeter turned off in order to completely eliminate any effects of its normal mode rejection. This isn't always possible, because some instruments have their inputs disconnected when they're turned off.

Real World Applications

Let's see how all of this theory is put to use in a commercially available DMM, the Fluke model 8502A. This instrument uses an *ohms converter*, which employs a current driver technique to drive a known amount of current through a reference and unknown resistance. The reference current (I_{ref}) flows through both the reference and unknown resistance. Figure 16 shows the inverting configuration used for the Ohm's amplifier.

The first two columns of Table 1 give different values of I_{ref} for different range selections. Assume a leakage current of 100 pA. This current is negligible compared with I_{ref} for low resistances. However, at high resistances on the 100 MΩ range, I_{ref} is equal to 76 nA and can cause a 13% error!

Now let's use the Ohm's guard feature of this instrument. The Ohm's guard is connected to the reference through a 1 kΩ resistor (see Figure 17). Ohm's guard

Range	I_{ref}	Full Scale	Full Scale Voltage at Node B	Current Available To Derive Z_2
10 Ω	10 mA	31.25 Ω	312.5 mV	2 mA
100 Ω	10 mA	250 Ω	2.5 V	1 mA
1 KΩ	1.25 μA	2 KΩ	2.5 V	9.75 mA
10 KΩ	78 μA	32 KΩ	2.5 V	11 mA
100 KΩ	98 μA	256 KΩ	2.5 V	4 mA
1 MΩ	49 μA	4.09 MΩ	20 V	4 mA
10 MΩ	0.61 μA	32.768 MΩ	20 V	4 mA
100 MΩ	76 nA	262.144 MΩ	20 V	4 mA

Table 1: Values for different range selections on the Fluke 8502A

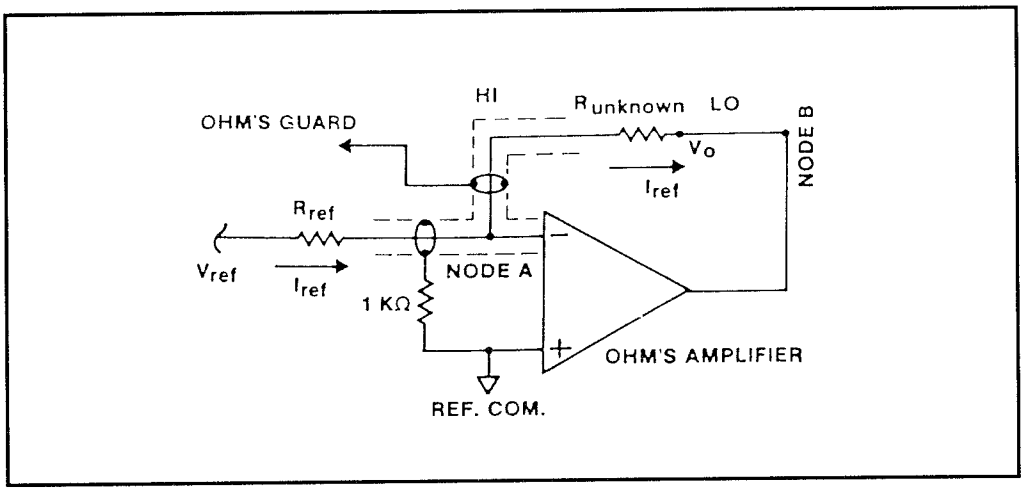

Figure 16: An Ohm's guard

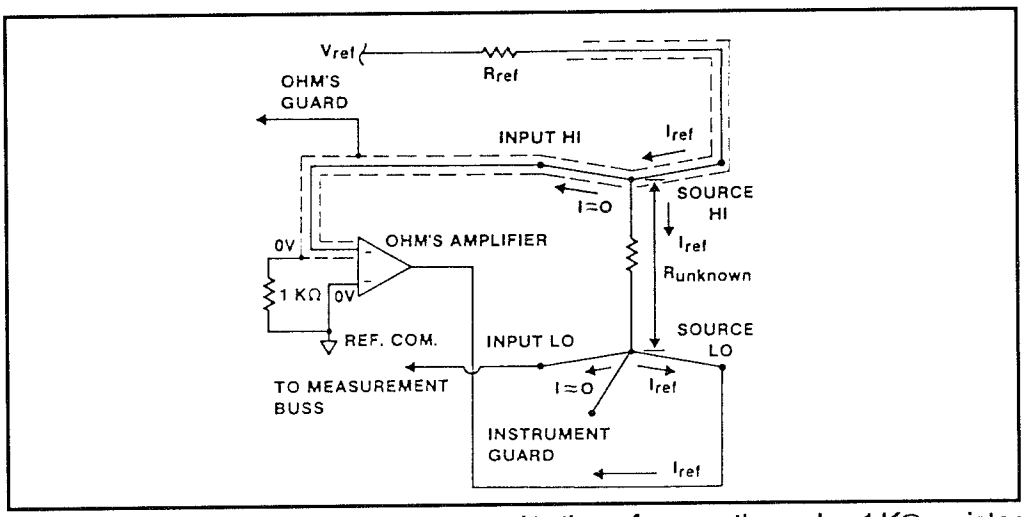

Figure 17: The Ohm's guard is connected to the reference through a 1 KΩ resistor

is different from instrument guard, which appears at the front panel. Here the Ohm's guard, which comes out the rear panel, is what allows you to make 4-wire measurements for low values of resistances (below 100 KΩ). Figure 18 shows that you connect the resistor to the LO end of the instrument guard.

Delta Network

What if the resistor you want to measure is part of a delta (Δ) network (see Figure 19)? An accurate measurement here is possible only if I_{ref} flows only through the

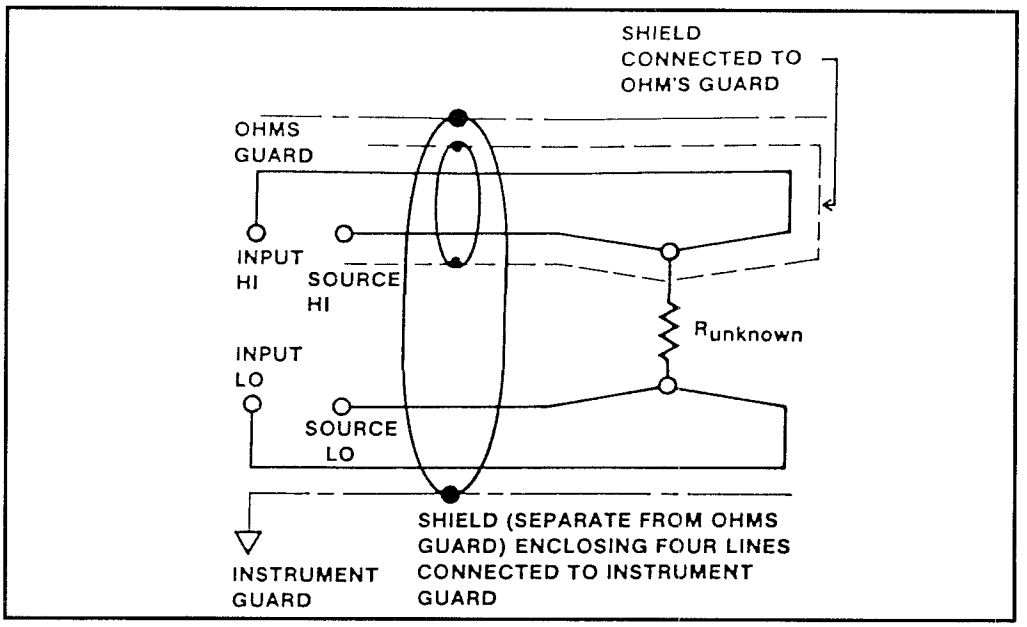

Figure 18: The resistor is connected to the LO end of the instrument guard

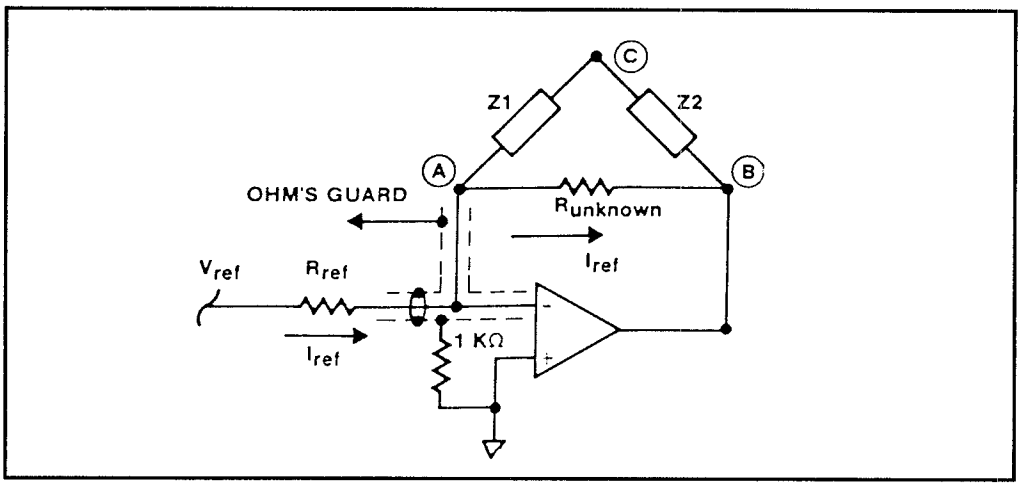

Figure 19: The unknown resistor is part of a delta (Δ) network

unknown resistor. However, some current does flow through Z_1. Node A is connected to a virtual ground. The Ohm's guard is also at ground potential. By connecting node C to Ohm's guard, it grounds node C. Theoretically, with both node A and node C grounded, no current will flow through Z_1 and you can make

a truly accurate measurement of the unknown resistance.

Assuming all the current flows through the unknown resistor, the full scale voltage on node B of Figure 20 is given in Table 1 for different ranges. Since node C is at ground potential, the Ohm's amplifier must sink current flowing through Z_2. The current sinking capability is also listed in Table 1.

When the current flows through the 1 KΩ resistor between the Ohm's guard and

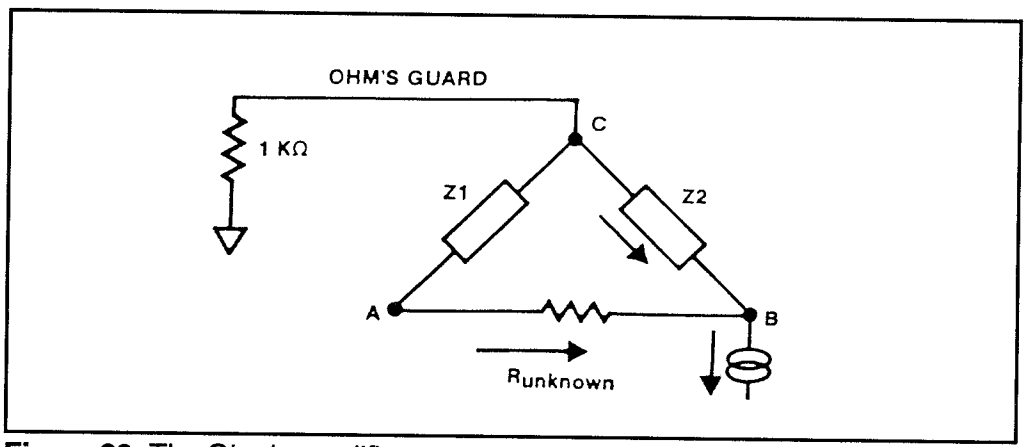

Figure 20: The Ohm's amplifier must sink current flowing through Z_2

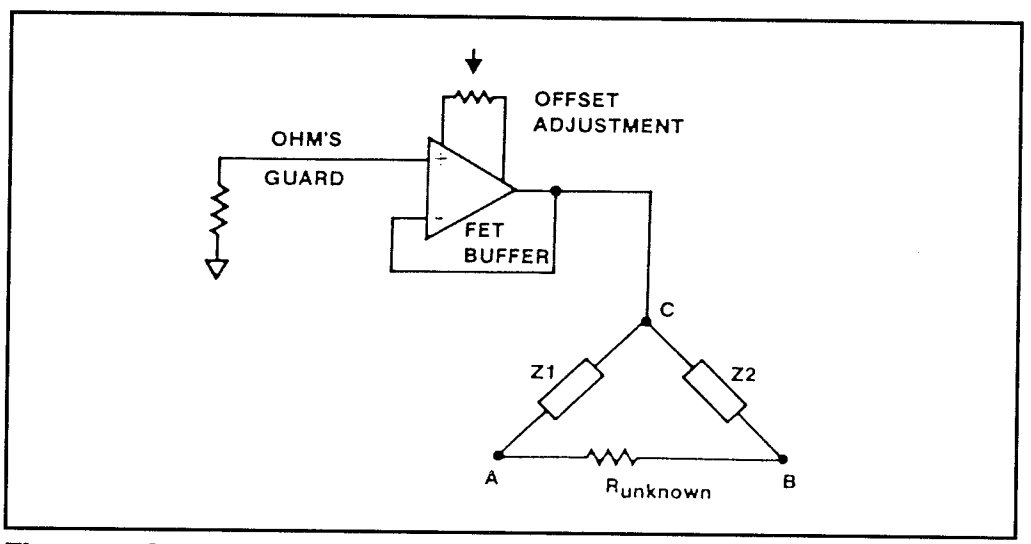

Figure 21: The offset adjustment for nulling used in the Ohm's Amplifier

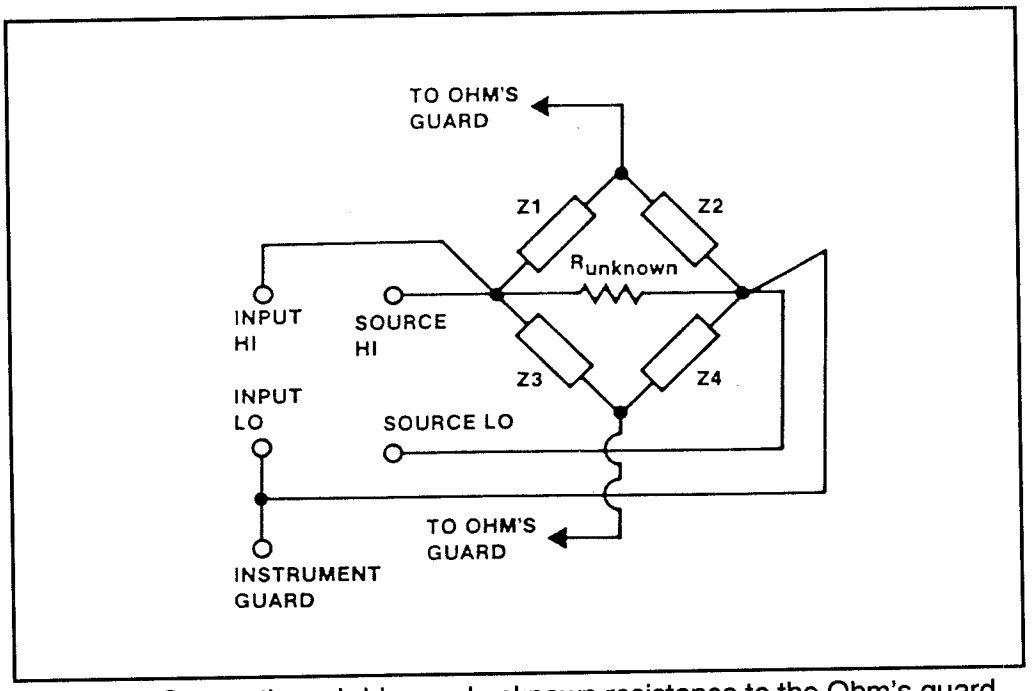

Figure 22: Connecting a bridge and unknown resistance to the Ohm's guard

reference common, there can develop at node C a negative potential with respect to node A. This is a source of error but can be remedied by the circuit in Figure 21. Here Fluke uses a buffer to drive node C. Figure 22 shows this same thing accomplished with the guard technique.

Summarizing Guarded Instruments

Guarded instruments will solve most common mode problems if they are connected according to the two basic rules: 1) always have the guard and low at the same voltage; and 2) make sure that no common mode current passes through any source resistance.

You'll find in many cases that it is impractical or impossible to satisfy both rules. It is not as easy as it seems. But, examine your measurement and come as close as possible. Remember the effectiveness of a guarded instrument depends on how it's connected, so use the guard, and, in so doing, improve your common mode rejection. — *Vaughn D. Martin*

3/3
Troubleshooting Techniques

3/3 - LLM
Low-Level Measurements

How to Make Low-Level Measurements

We are all familiar with making voltage, current, and resistance measurements and for the most part take these exercises for granted. You may be surprised to find out, though, that there are limits to what you can measure. For example, Figure 1 shows a graph of the theoretical limits of voltage measurements. The graph depicts noise voltage versus source resistance.

A variety of devices are available for making voltage, current and resistance measurements, one of which is the familiar digital multimeter (DMM). A DMM is fine for general purpose measurements, but it falls short if you try to use it to make very low-level measurements (for example, below 1 μV, 1 μA, or above

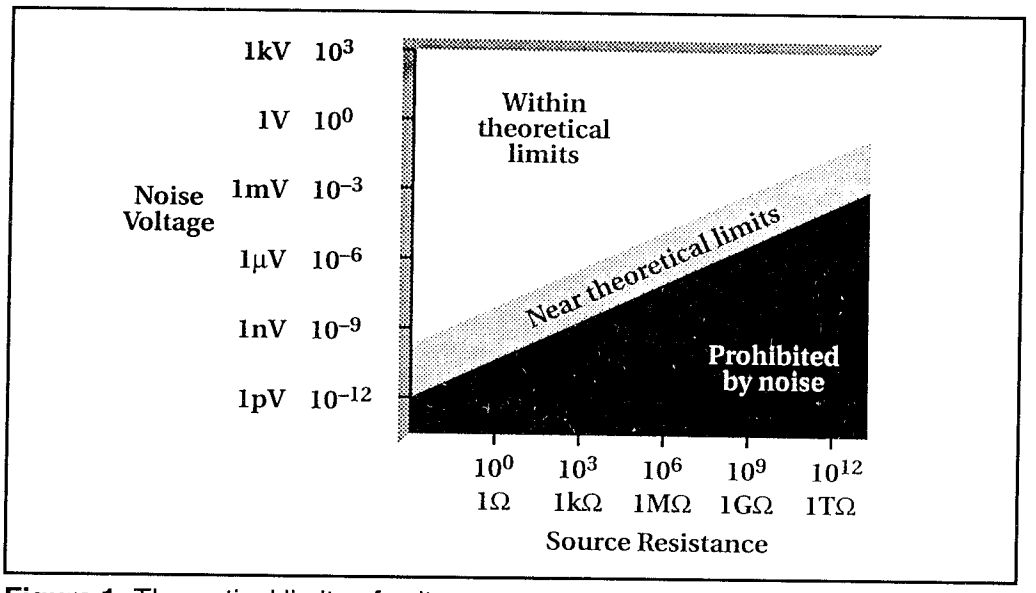

Figure 1: Theoretical limits of voltage measurements.

1 GΩ). But there are instruments, such as the electrometer and nanovoltmeter, and measuring techniques that allow you to do this (see Figure 2).

Accurate, repeatable measurements

Is this all very esoteric, just "strictly in the research lab" stuff? Absolutely not! If you want to *accurately* measure, with *repeatable* results: contact resistance, PC board resistance, semiconductor resistivity, or capacitor and transistor leakages, you'll have to use the instruments and techniques we're about to describe. Keithley is the world's largest manufacturer of these kinds of instruments; therefore, we will use their instruments throughout this article for illustration purposes.

Digital Multimeters

Most DMMs include five measurement functions: DC volts, AC volts, ohms, DC amps, and AC amps. As shown in Figure 3, various signal processing circuits are used to convert the input signal into a DC voltage that can be converted to digital information by the A/D converter.

The DC and AC attenuator circuits provide ranging for the AC and DC functions. The AC converter changes AC signals to DC, while the ohms converter provides

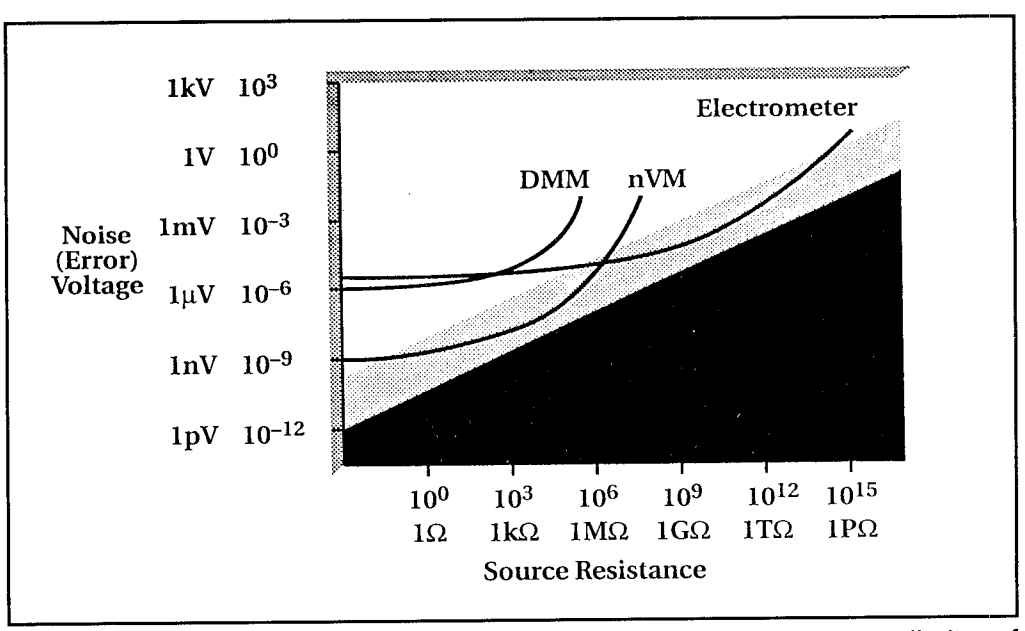

Figure 2: Typical DMM, nanovoltmeter (nVM), and electrometer limits of measurement (shown at various source resistances).

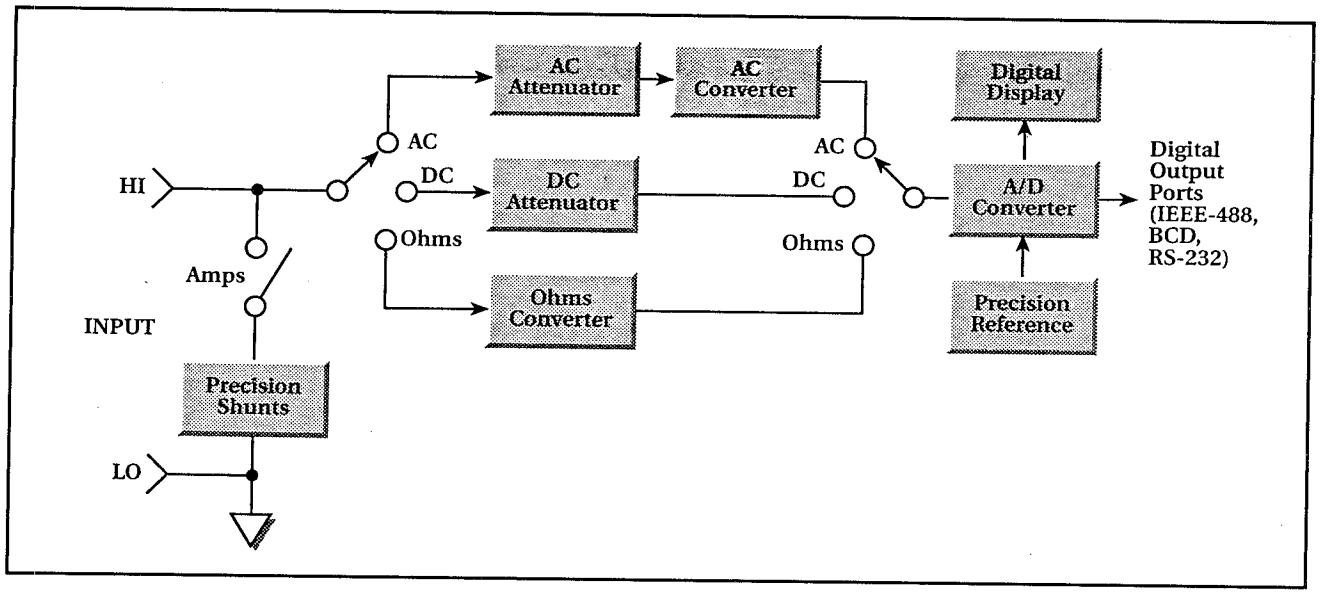

Figure 3: A block diagram of a typical digital multimeter.

a DC analog voltage for resistance inputs. Precision shunts are used to convert currents to voltages for the amps functions.

Once the input signal is appropriately processed, it is converted to digital information by the A/D converter. Digital data is then sent to the display and any digital output ports in the instrument.

DMM Limitations

A DMM's limitations (again refer to Figure 2) are largely based upon resolution and source resistances. If source resistance is 1 MΩ or less, and the resolution you require is less than 1 μV, then you're exceeding the DMM's limits.

Better Voltage Sensitivity

If you desire better voltage sensitivity you'll need to use a nanovoltmeter. A nanovoltmeter has the ability to measure source resistances in the 1 TΩ (teraohm = 10^{12}Ω) range. The best DMMs can handle 10 GΩ (10 gigaohms = 10 x 10^{9}Ω) or two orders of magnitude less.

Before we start to examine instruments more appropriate for low-level measurements, let's be certain we understand resolution, sensitivity, accuracy and some other general terms associated with measurement technology and practices.

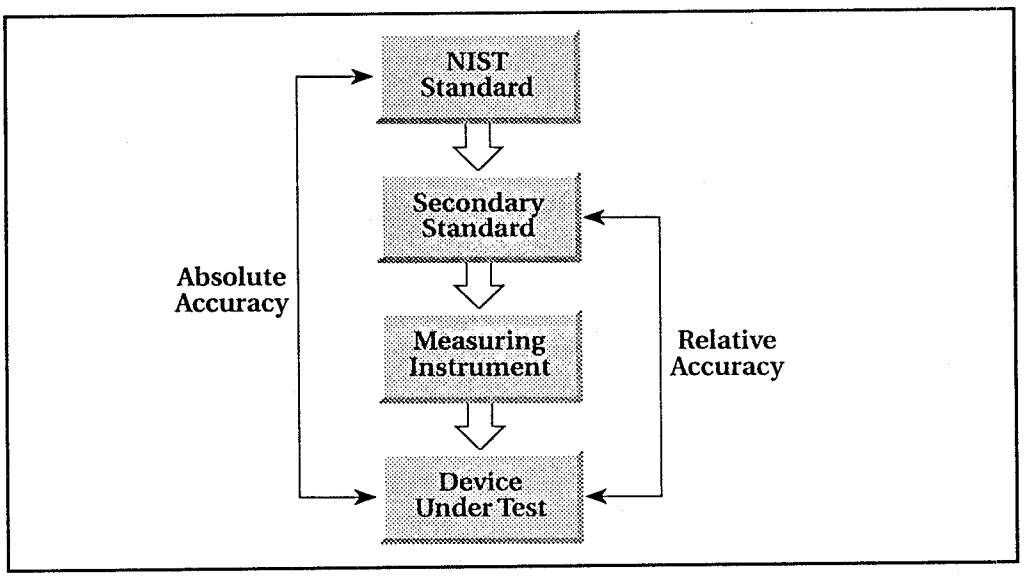

Figure 4: A comparison of absolute and relative accuracy.

Defining Measurement Terms

Resolution

Resolution can be thought of as the number of counts a meter can display. In more practical terms, it is the degree to which you can detect small changes. As an example, on a 2,000 count DMM, the display might read 199.7. If you were to use a 20,000 count DMM, the same signal could be read as 199.75.

Sensitivity

You may think this sounds like sensitivity, and wonder "are the two the same?" No, they are not! Remember, resolution is only the smallest degree to which changes can be detected. *Sensitivity* is the smallest level of signal an instrument can read.

Accuracy

Accuracy is one of the most important considerations in any measurement situation. For any given test setup, a number of factors can affect accuracy. The most important factor is the accuracy of the instrument itself, which may be specified as a percentage of full scale, a percentage of reading, or a combination of both. Factors affecting accuracy are input loading, leakage resistance and current, shielding, and guarding.

Analog meter accuracy specifications are usually given as a percentage of full scale, such as ±1%. The accuracy decreases as the the reading becomes a smaller

percentage of the full scale. For example, with a ±1% full-scale accuracy specification on a 1 V range, the reading error with a 0.5 V input will be 2%. Digital meter accuracy specifications are usually specified as ± a percentage of the reading plus a number of counts. The percentage accuracy figure is given as a percentage of reading, unlike the percentage full-scale accuracy for an analog meter. The effect on accuracy regarding the number of counts depends on the resolution of the displayed digits.

Accuracy can also be specified in ppm (parts per million). Typically, this accuracy specification is given as ±(ppm of reading + ppm of range). As an example, the DCV accuracy of a DMM might be specified as ±(25 ppm of the reading + 5 ppm of range).

Absolute Accuracy

The diagram of Figure 4 shows that absolute accuracy is accuracy of an instrument directly traceable to the primary standard at the National Institute of Standards and Technology (NIST), formerly called the NBS (National Bureau of Standards).

Absolute accuracy may be specified as the ±(% of reading + counts), or it can be

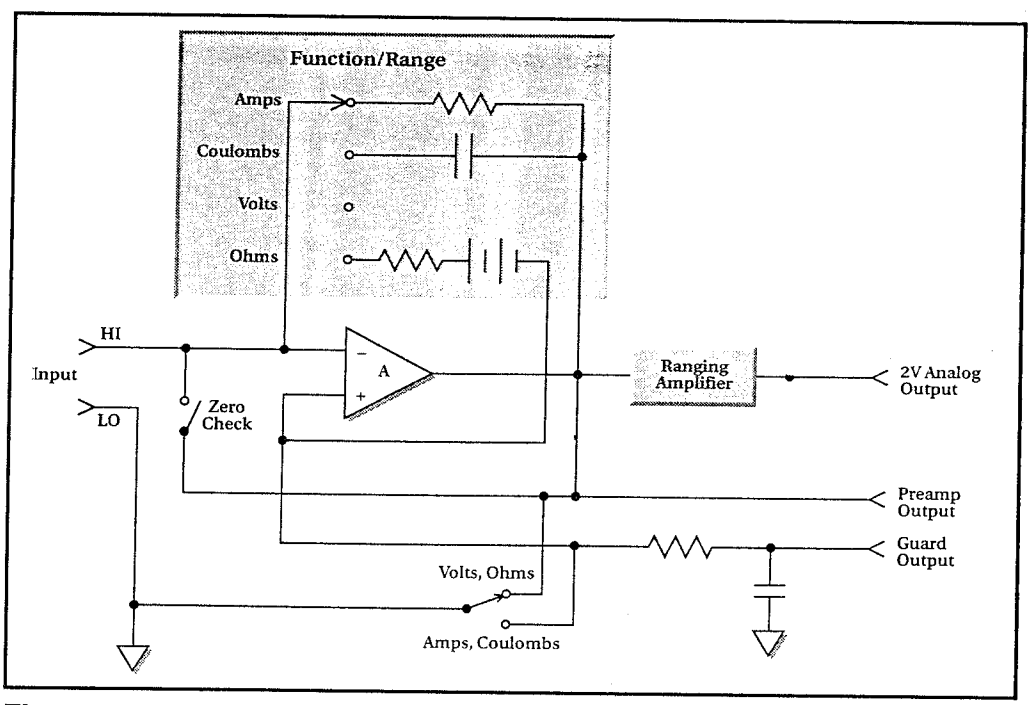

Figure 5: A block diagram of a typical analog electrometer.

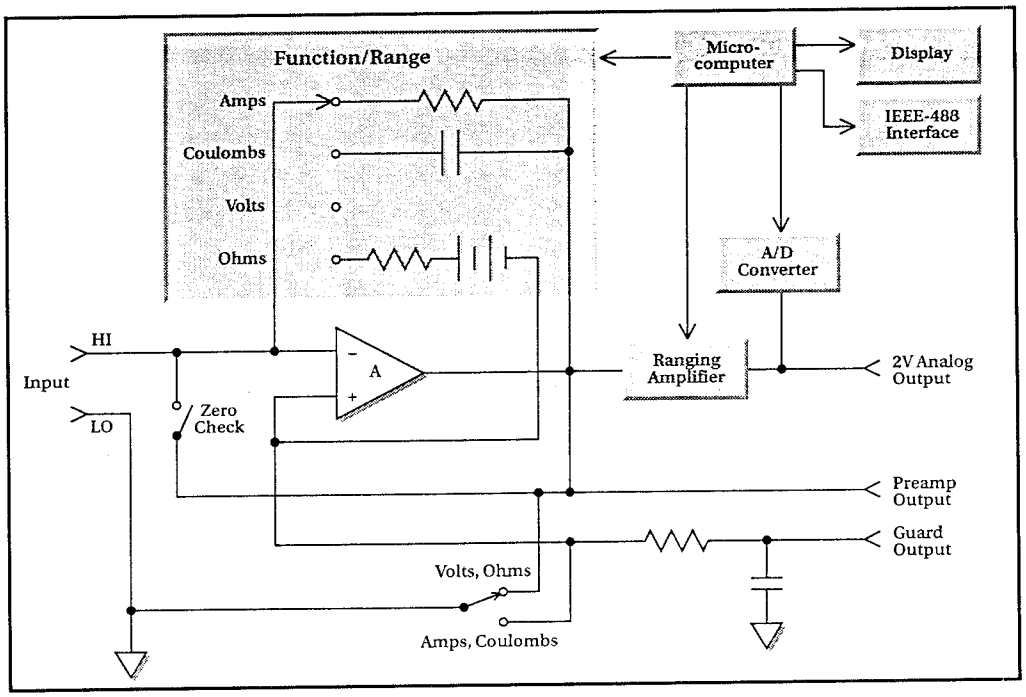

Figure 6: A block diagram of a typical digital electrometer.

stated as ± (ppm of reading + ppm of range). In this case, ppm stands for parts per million of error.

Relative Accuracy

Relative accuracy (see Figure 4) specifies instrument accuracy to some secondary standard. As with absolute accuracy, relative accuracy can be specified as ± (% of reading + counts), or it may be stated as ± (ppm of reading + ppm of range).

Analog Electrometers

An electrometer is a highly refined DC multimeter. As such, it can be used for virtually any measurement task performed by a conventional DC multimeter. Additionally, the special high input impedance characteristics and high sensitivity of an electrometer permit it to perform many tasks outside the capabilities of other meters. Figure 5 shows a block diagram of an analog electrometer.

Digital Electrometers

The digital electrometer preamplifier functions are very similar to those

encountered for the analog electrometer. The main difference between the two is the A/D (Analog-to-Digital) conversion process. Also, many digital electrometers have built-in intelligence to enhance accuracy and add other useful features. The block diagram of a typical digital electrometer is shown in Figure 6. The analog section is similar to the circuitry of the analog electrometer. An electrometer preamplifier is used at the input to increase sensitivity and raise input resistance. The output of the main amplifier is applied to both the analog output and the A/D converter. Range and function switching, instead of being performed directly, is controlled by the microcomputer.

Microcomputer Controlled

The microcomputer also controls the A/D converter and supervises all other operating aspects of the instrument. The input signal to the A/D converter is generally 0-200 mV or 0.2 VDC. After conversion, the digital data is read on the display or transmitted over the IEEE-488 bus.

Nanovoltmeters

A nanovoltmeter is a sensitive voltmeter designed to measure very low DC voltages. A nanovoltmeter is optimized to provide measurements near the theoretical limits of low source resistances. This is in contrast to the electrometer, which is optimized for use with high source resistances. Compared to an electrometer, the voltage noise and drift are much lower, and the current noise and drift are much higher (but no worse than a DMM). Input resistance is usually similar to that of a DMM and is much lower than that of an electrometer.

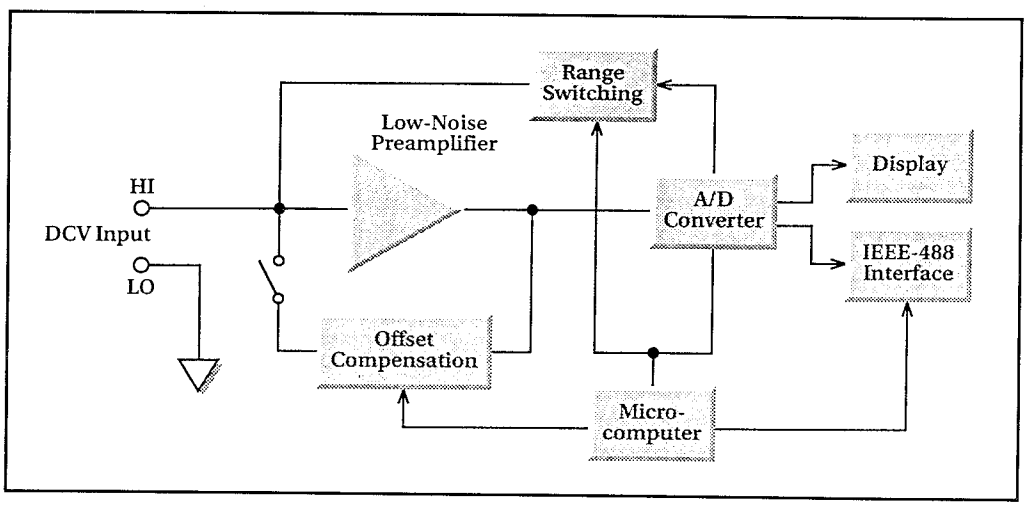

Figure 7: A block diagram of a typical nanovoltmeter.

The nanovoltmeter shown in Figure 7 incorporates a low-noise preamplifier, which amplifies the signal to a level suitable for A/D conversion (typically 2 to 3 V full scale). Specially designed preamplifier circuits ensure that unwanted noise, thermal EMFs, and offsets are kept to an absolute minimum.

Drift Compensation Circuit

In order to cancel internal offsets, an offset or drift compensation circuit allows the preamplifier offset voltage to be measured during specific phases of the measurement cycle. The resulting offset voltage is subsequently subtracted from the measured signal to maximize measurement accuracy.

Modern nanovoltmeters are just as reliable and easy to operate as DMMs, and many such instruments can interface with DMMs. Their distinguishing characteristic is their voltage sensitivity, which can be as good as 1 nV. Most nanovoltmeters are not multi-function instruments

Picoammeters

A picoammeter is an ammeter built along the lines of the ammeter function of an electrometer. Generally it has as low or lower voltage burden, similar or faster speed than an electrometer, not as much sensitivity, and a lower price. It may

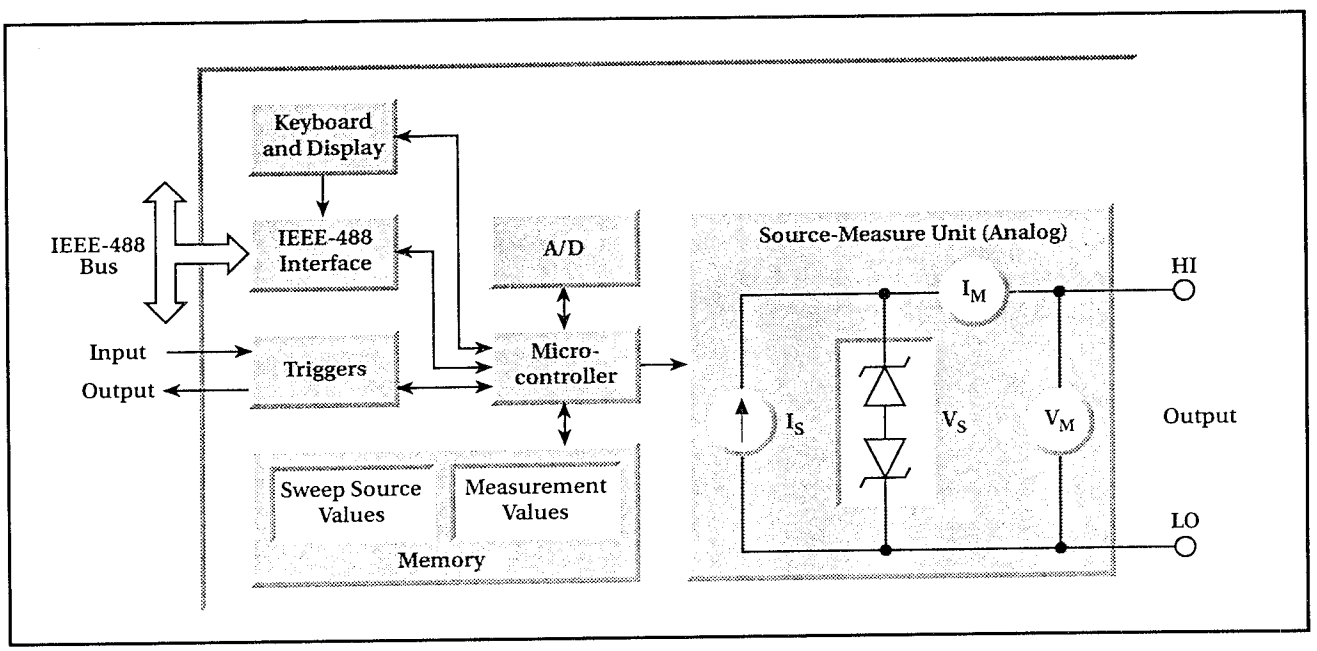

Figure 8: A simplified block diagram of a source-measure unit.

also have special characteristics, such as high speed or logarithmic output.

Source-Measure Units

As the name implies, a source-measure unit (SMU) has both measuring and sourcing capabilities. Adding current and voltage sourcing capabilities to a measuring instrument provides an extra degree of versatility for many low-level measurement applications. For example, very high resistance values can be determined by applying a voltage across the device under test and measuring the resulting current. The added sourcing functions also make a SMU more convenient and versatile than using separate instruments for such applications as generating I-V curves for semiconductors and other types of devices.

Four Functions In One

The source-measure unit provides four functions in one instrument: measure voltage, measure current, source voltage, and source current. Generally, such instruments can simultaneously source voltage and measure current, or simultaneously source current and measure voltage.

Figure 8 shows a simplified block diagram of a typical source-measure unit. While much of the digital section is similar in function to that of other instruments, it is the analog section that sets this instrument apart from most

Figure 9: A typical micro-ohmeter.

others. Here, V_M and I_M represent the voltage and current measurement functions respectively, while V_S and I_S indicate the voltage source and current source functions.

Modern SMUs have a number of electrometer-like characteristics making them suitable for low-level measurements. The input resistance is very high (typically 100 TΩ or more), minimizing circuit loading when making voltage measure-

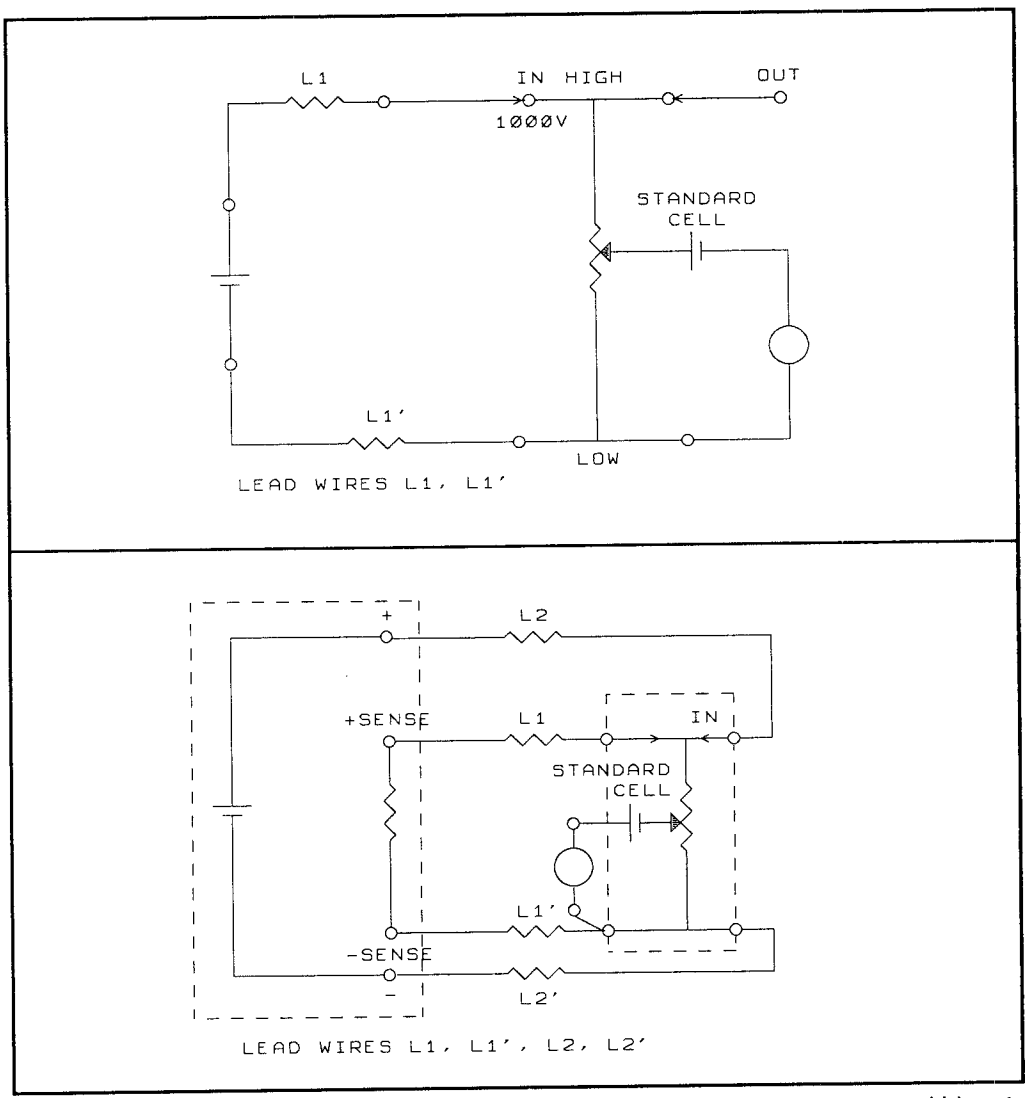

Figure 10: a) A 2-wire method of making resistance measurements; and b) a 4-wire method of making resistance measurements.

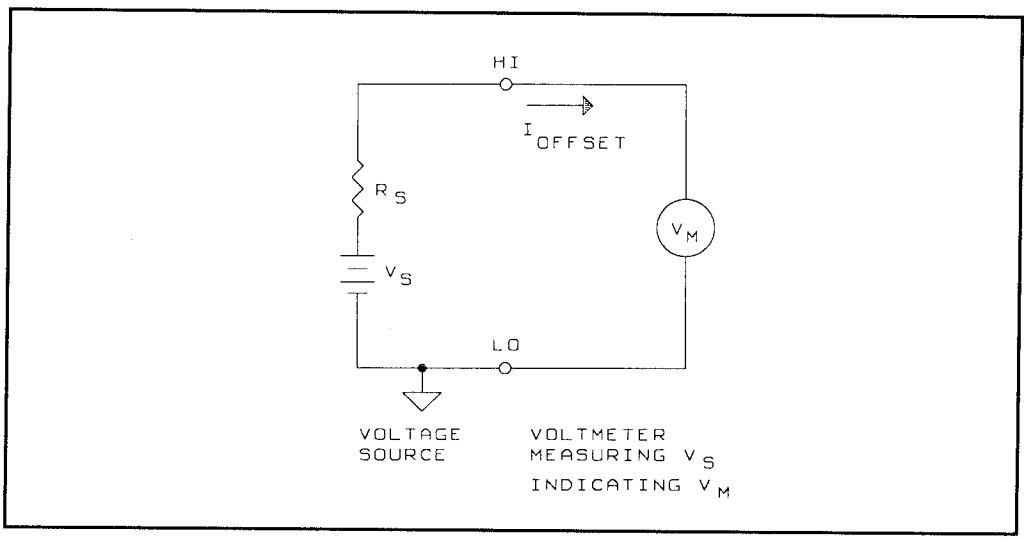

Figure 11: Effects of input offset on voltage measurement accuracy.

ments from high-impedance sources. The current-measurement sensitivity is also similar to that of the electrometer picoammeter section — typically as low as 10 μA.

Another important advantage of many source-measurement units is their sweep capability. Either voltage or current can be swept across the desired range at specified increments, and the resulting current or voltage can be measured at each step. Built-in source-delay-measure cycles allow measurement speed to be optimized while ensuring sufficient circuit settling time to maintain measurement integrity.

Micro-ohmmeters

A micro-ohmmeter is a special type of ohmmeter designed especially for making low-level resistance measurements. While the techniques used for making resistance measurements are similar to those used in a DMM, micro-ohmmeter circuits are optimized for making low-level measurements. A typical micro-ohmmeter (see Figure 9) can resolve resistances as low as 10 μΩ.

Measurements made using the micro-ohmmeter are always performed using the 4-wire technique (see explanation below) in order to minimize errors caused by test leads and connections. The typical micro-ohmmeter also has additional features such as offset compensation and dry circuit testing to optimize low-

resistance measurements. Offset compensation is performed by pulsing the test current and is intended for canceling offsets from thermal EMFs. The dry circuit test mode limits the voltage across the device under test to a very small value (typically < 20 mV) to avoid puncturing oxides when testing such devices as relay and connector contacts, both of which we'll cover in the applications section of this article. But, first, let's examine the 4-wire (Kelvin) measurement technique more closely.

Resistance Measurements

The resistance of an object is measured by utilizing Ohms law, V = IR, or R = V/I. Either a known voltage is applied to the sample and the current through it is measured, or a known current is applied and the voltage across the sample is measured. The latter method is the most popular method. Most Hewlett-Packard meters that can measure resistance apply a precision DC current to a sample, then measure the voltage that is generated across it. Then, by dividing the measured voltage by the known current (this is normally done in firmware — transparent to the user), the resistance of the sample is obtained. The accuracy and resolution of this final resistance reading are limited to the accuracy and resolution of both the current source and voltage measurement circuitry. Resistance measurements are commonly referred to as either a 2-wire or 4-wire measurements. This refers to the way the sample is connected to the meter. There are advantages to both methods.

2-Wire Setup

A typical 2-wire setup is shown in Figure 10a. The current source and voltage

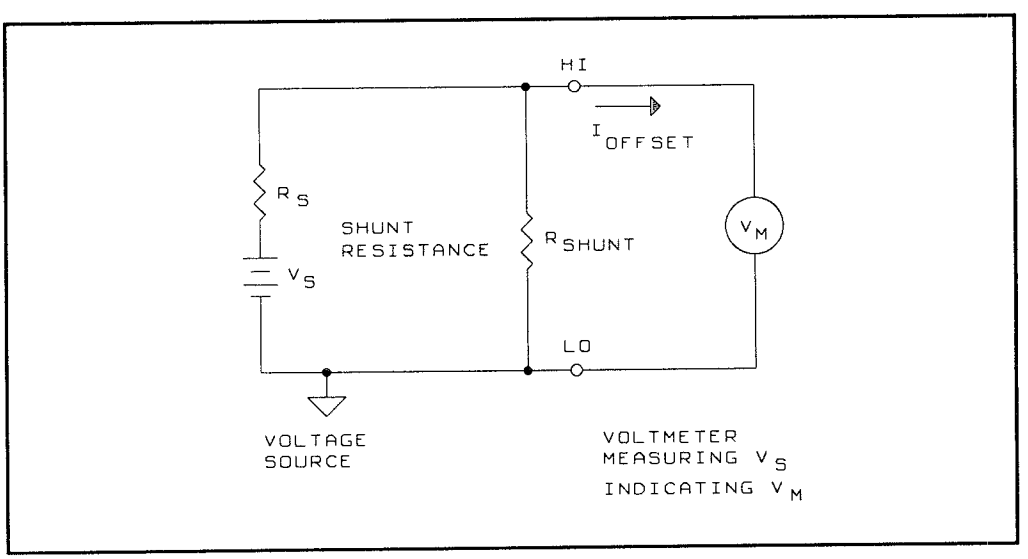

Figure 12: Effects of shunt resistance on voltage measurement accuracy.

Voltage Burden

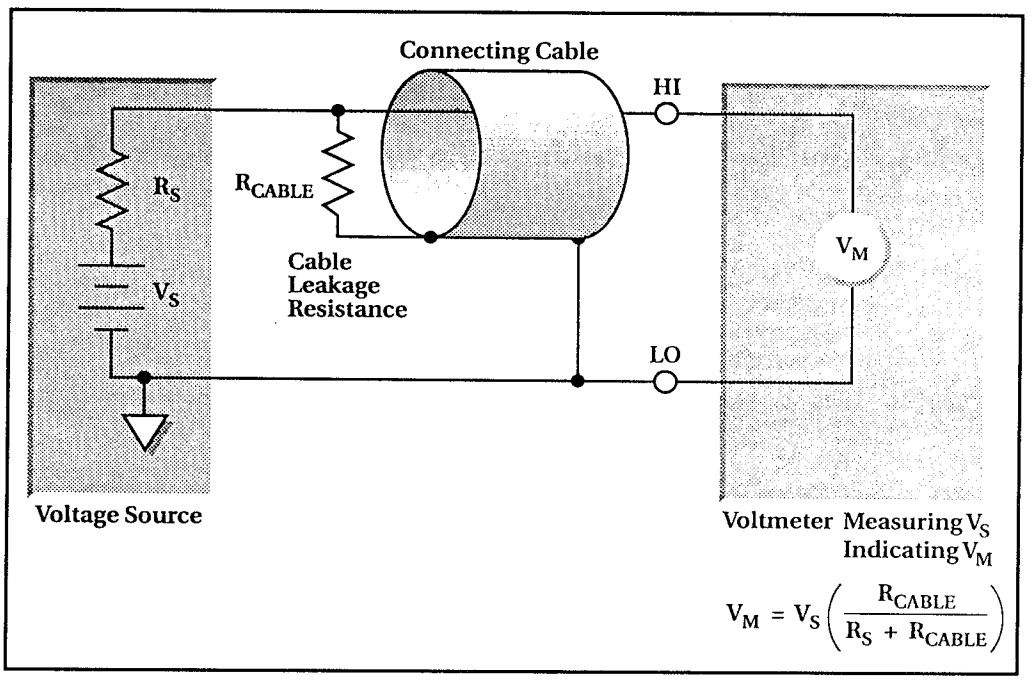

Figure 13: Effects of cable leakage resistance on voltage measurement accuracy.

measurement circuitry are connected together at the voltmeter, and two wires are run to the sample. This effectively means that the current is run through the sample as well as through both leads, and the voltage across the leads and the sample is measured at the meter terminals. The advantage to this method is that only two wires need to be connected to the sample — in production systems this can save considerable wiring and switching hardware. The disadvantage is that the resistance of the test leads is included in the final reading, and may add a considerable error to the reading, depending on how high the lead resistance is.

4-Wire Setup

A typical 4-wire setup is shown in Figure 10b. This method runs the current source *and* the voltage measurement circuitry leads directly out to the actual sample. With this type of connection, lead resistance errors are avoided. Why? Because the current source is run through its own set of leads (lead resistance does not affect an ideal current source, it puts the same current out no matter what the lead resistance) and the voltage reading is taken right at the sample through its own separate leads. Since the impedance of the voltage measurement circuitry is extremely high compared to the resistance of the leads that connect to the sample ($10^6\ \Omega$ compared to approximately $10\ \Omega$), very little current runs down the voltage measurement path. The IR drop due to the leads is negligible, so there

is no appreciable error due to the lead resistance! The advantage to this approach is that it is very accurate — it is used on any resistance measurement requiring very high accuracy (thermistors, low ohms measurements). The disadvantage is that extra cabling and switching are required to route four wires to the sample.

Making Voltage Measurements

When making voltage measurements, any voltage offset in series with V_M and V_S will be indistinguishable from V_S. Voltage offsets in the instrument are zeroed out in accordance with the operating instructions of the instrument; residual offsets are included in the instrument's specifications. Voltage offsets may also be generated outside the instrument due to thermal EMFs and other effects, or by offset currents flowing through R_S.

Input Offset Current

Another consideration when measuring voltages from sources with high impedance is the input offset current of the voltmeter. As shown in Figure 11, the input offset current, I_{OFFSET}, develops an error voltage across the source resistance R_S. Thus, the actual measured voltage V_M differs from the source voltage V_S as follows:

$$V_M = V_S \pm I_{OFFSET} \times R_S$$

For example, assume the following operating parameters: I_{OFFSET} = 1 pA, R_S = 10 GΩ, and V_S = 10 V. The actual voltage measured by the meter is:

$$V_M = 10 \pm (10^{-12} \cdot 10^{10})$$
$$V_M = 10 \pm 0.01$$
$$V_M = 9.99 \text{ V or } 10.01 \text{ V (depending on current polarity)}$$

Thus, the error caused by input offset current would be about 0.1% in this example.

DMMs and nanovoltmeters have offset currents around 10 pA to 10 nA, although DMM offset currents are not always specified. Electrometers are known for their low input current, from 10 fA (femtoamps = 10^{-15}) down to 50 aA (attoamps = 10^{-18}), which is always specified. Picoammeters and SMUs also have very low input offset currents, although usually not as low as the best electrometers.

Although input offset current is a common source of this type of error, external circuit currents can also result in errors due to voltage drops across the source resistance. Typical sources of such offset currents are insulators and cables.

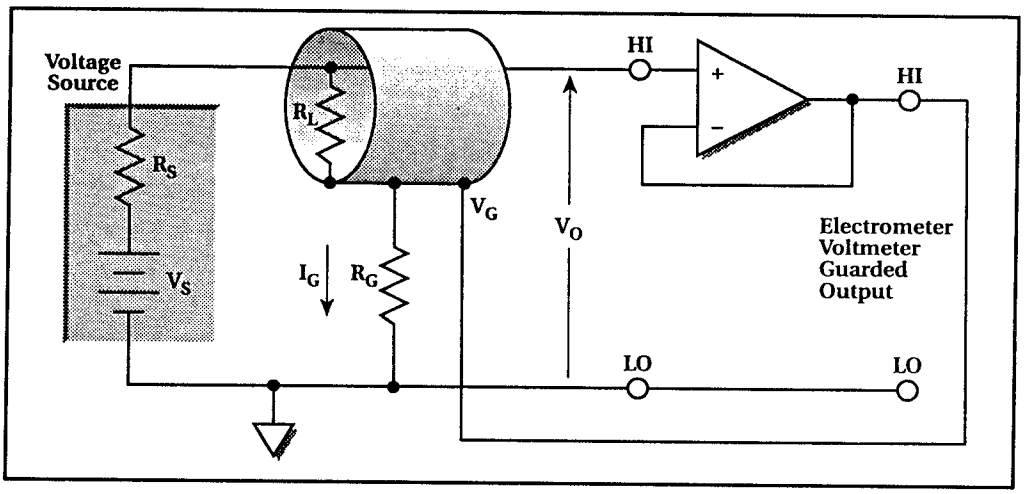

Figure 14: A guarded configuration.

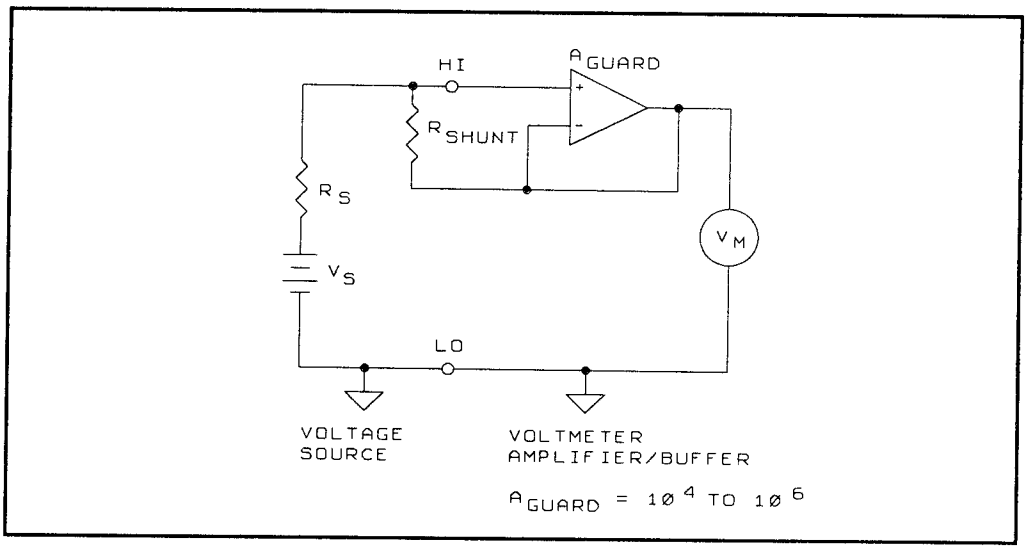

Figure 15: Guarding shunt resistance.

Shunt Resistance Loading

Any external shunt resistance across the voltage source can attenuate the measured voltage, as shown in Figure 12. As in the case of input resistance voltage loading, shunt resistance R_{SHUNT} and source resistance R_S form a voltage divider that reduces the measured voltage, V_M, as follows:

$$V_M = [V_S (R_{SHUNT})] / [(R_{SHUNT} + R_S)]$$

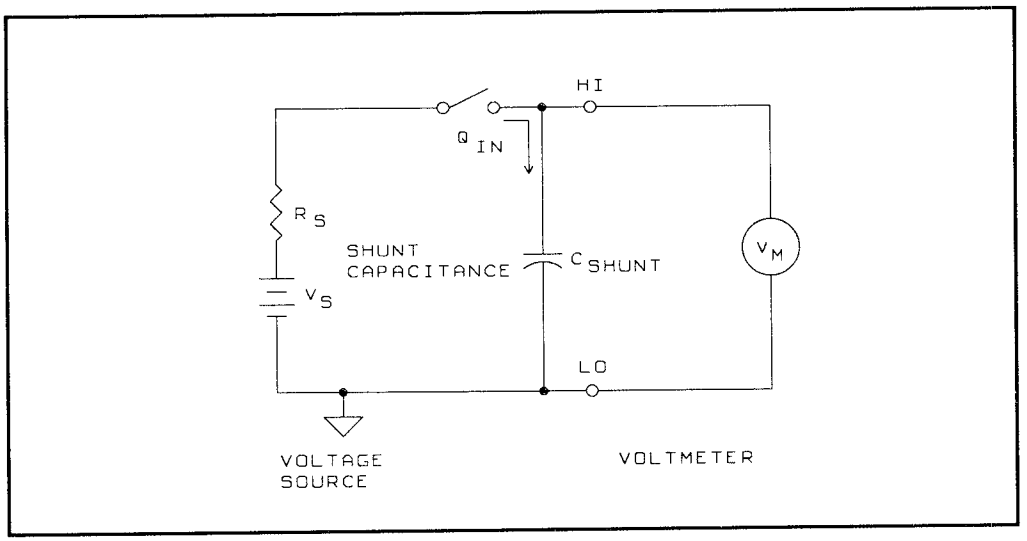

Figure 16: Shunt capacitive loading.

For example, assume that $R_S = 10\ G\Omega$ and that $R_{SHUNT} = 100\ G\Omega$. If V_S has a value of 10 V, the measured voltage V_M is:

$$V_M = 10 \times 10^{11} / (10^{10} + 10^{11}) \times V_M = 9.09\ V$$

In this instance, the error due to shunt loading is approximately 9%.

A common source of shunt resistance loading is cable leakage resistance, as shown in Figure 13. In this case, measured voltage V_M is attenuated by the voltage divider formed by R_S and cable resistance, R_{CABLE}:

$$V_M = V_S (R_{CABLE}) / (R_S + R_{CABLE})$$

Guarding Shunt Resistance

Guarding uses a conductor at essentially the same potential as the sensitive input, supplied by a low-impedance voltage source, to totally surround the input leads carrying the high-impedance signal. Maintaining the guard conductor at the same potential as the high-impedance circuitry results in drastically reduced leakage currents from those leads.

If the shield is connected to a low-impedance source of the same potential as the high-resistance source, such as the x1 output or guard terminal of an electrometer voltmeter, leakage from the center conductor to the shield will be substantially reduced. This is so because there is essentially no voltage differ-

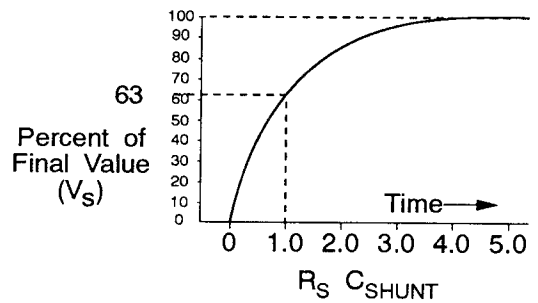

Figure 17: Exponential response of voltage across shunt resistance.

ential across insulation resistance R_L, as shown in Figure 14. Figure 15 further illustrates the concept of guarding. The guarding gain factor, A_{GUARD}, is determined by the operational amplifier gain and is:

$$A_{GUARD} = 10^4 \text{ to } 10^6$$

Since the value of shunt resistance R_{SHUNT} is effectively multiplied by A_{GUARD}, the effects of shunt resistance are greatly reduced. The voltage actually measured by the meter now becomes:

$$V_M = V_S\,[(A_{GUARD}\,R_{SHUNT})] / [(A_{GUARD}\,R_{SHUNT} + R_S)]$$

For example, assume that R_S has a value of 10 GΩ and that R_{SHUNT} is 100 GΩ. If we assume a mid-range value of 10^5 for A_{GUARD} and a value of 10 V for V_S, the voltage measured by the meter is:

$$V_M = 10\,(10^{16}) / (1.000001 \times 10^{16})$$
$$V_M = 9.99999 \text{ V}$$

Time Constant (τ*)	Percent of Final Value
1	63%
2	86%
3	95%
4	98%
5	99.3%

*τ = RC, where R= resistance (ohms), C= capacitance (farads)

Table 1: Settling times to percentage of final value.

Thus, we see that the loading error with guarding is less than 0.001%. In contrast, the unguarded error voltage with this combination of source and shunt resistances would be about 9%.

Shunt Capacitance Loading

The settling time of a voltage measurement depends both on the equivalent source resistance and the effective capacitance at the input of the voltmeter. This input capacitance consists of the meter input capacitance and the input cable capacitance. Thus, for high resistance measurements, even a small amount of shunt capacitance can result in long settling times. For example, a shunt capacitance of 100 pF (including the input cable) and a source resistance of 20 GΩ results in an RC time constant (t) of two seconds. Ten seconds must be allowed for the measurement to settle to within 1% of the final value.

Figure 16 demonstrates the effects of shunt capacitance loading on the input of a typical high-impedance voltmeter. The signal source is represented by V_S and R_S, the shunt capacitance is C_{SHUNT}, and the measured voltage is V_M. Initially, the switch is open, and C_{SHUNT} holds zero charge.

When the switch is closed, the source voltage V_S is applied to the input, but the measured voltage across C_{SHUNT} does not rise instantaneously to its final value. Instead, the voltage rises exponentially as follows:

$$V_M - V_S (1 - e^{-t / R_S C_{SHUNT}})$$

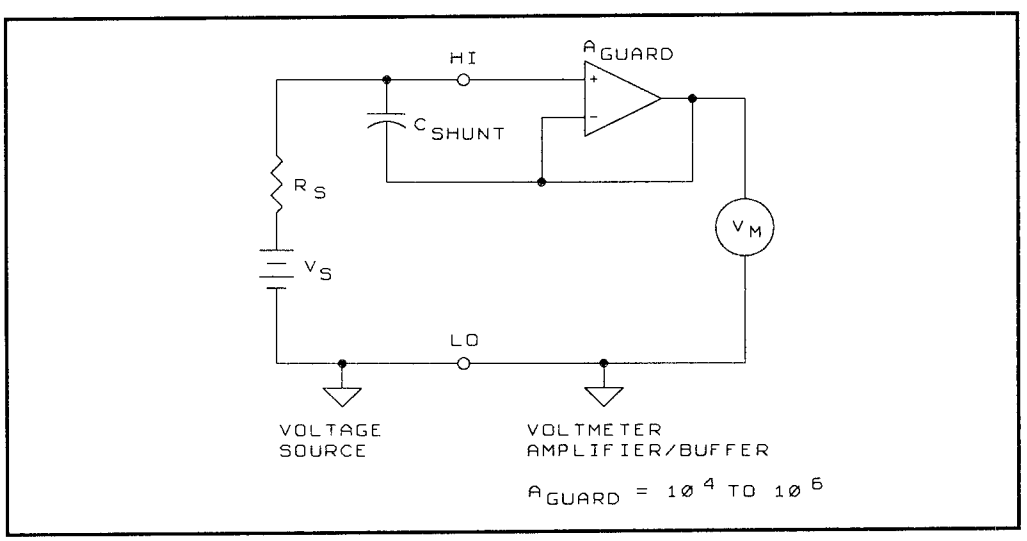

Figure 18: Guarding shunt capacitance.

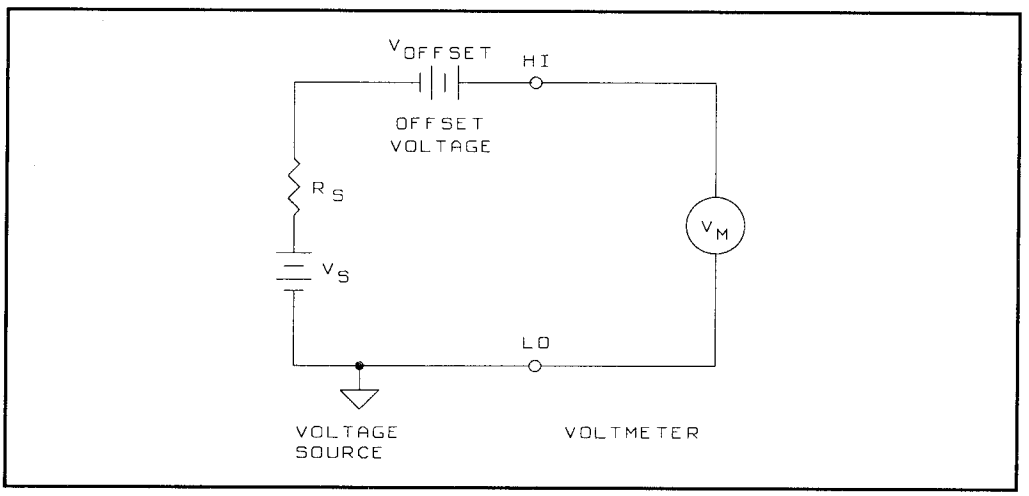

Figure 19: Effects of offset voltage on voltage mMeasurement accuracy.

Also, the charge, Q, transferred to the capacitor is:

$$Q_{IN} = V_S C_{SHUNT}$$

The charging action of C_{SHUNT} yields the familiar exponential curve shown in Figure 17. After one time constant (t = RC), the measured voltage rises to within 63% of its final value; final values for various time constants are summarized in Table 1.

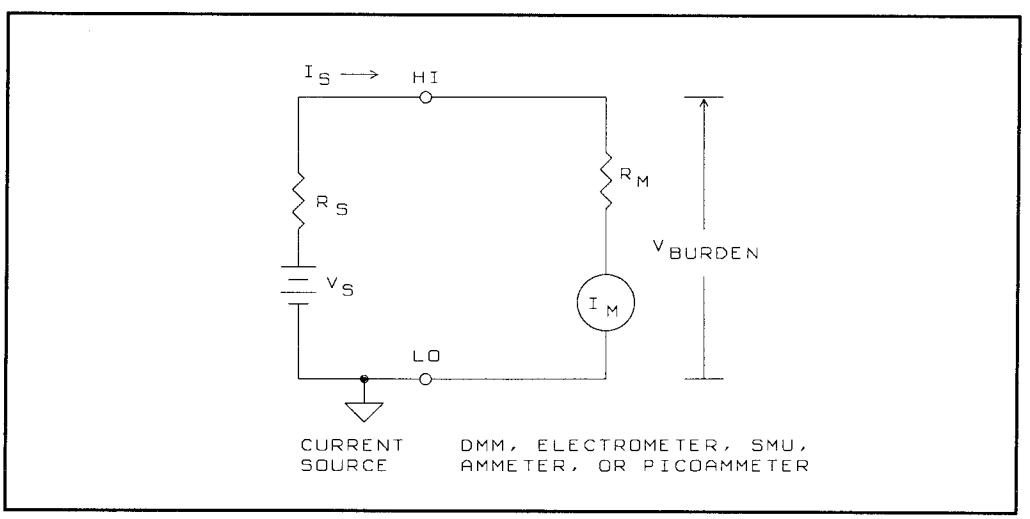

Fig. 20: Effects of voltage burden on current measurement accuracy.

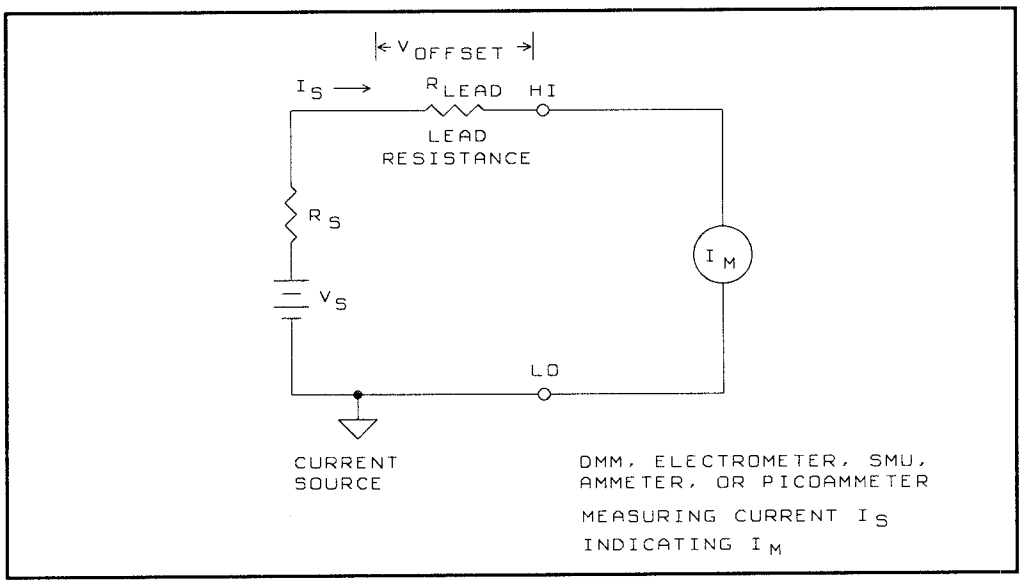

Figure 21: Effects of load resistance on current measurement accuracy.

As another example, assume that R_S = 10 GΩ and C_{SHUNT} = 100 pF. This combination results in an RC time constant (t) of one second. Thus, it would take five seconds for the circuit to settle to within less than 1% of final value. With a 10 V change in V_S, a total of 1 nC of charge would be transferred to C_{SHUNT}.

Guarding Shunt Capacitance

While the primary advantage of guarding is a reduction in the effects of shunt resistance, another important aspect is the reduction in the effects of shunt capacitance. As shown in Figure 18, the voltage amplifier/buffer significantly reduces the charging time of C_{SHUNT} because of the guard amplification factor A_{GUARD} (= 10^4 to 10^6).

With guarding, the rise time of measured voltage V_M now becomes:

$$V_M = V_S (1 - e^{-t\, A_{GUARD} / R_S A_{GUARD}})$$

and the charge transferred to C_{SHUNT} is:

$$Q_{IN} = V_S C_{SHUNT} / A_{GUARD}$$

As an example, assume that R_S = 10 GΩ and that C_{SHUNT} = 100 pF as in the unguarded example given previously. If you assume a nominal value of 10^5 for A_{GUARD}, you can see that the guarded RC settling time is reduced to approximately

mately 50 µs (5 seconds/10^5), an insignificantly small amount that is much less than the 100 to 200 ms that it typically takes an instrument to process a single reading.

Thermal EMFs

Significant errors may be introduced into low-voltage measurements by thermal EMF offset voltage sources that normally can be ignored at higher signal levels. Ideally, a voltmeter should read 0 V when its input terminals are shorted together. However, in most low-voltage measurement situations, a number of error sources in the test system may generate signals that will be seen as a non-zero offset voltage on the meter with the input terminals shorted. Typical sources of these voltage offsets include thermal EMFs, voltmeter internal amplifier offsets, and (in some cases) offsets induced by RFI (radio frequency interference) rectification.

Figure 19 shows how any offset voltage V_{OFFSET} will add to or subtract from the source voltage V_S so that the voltage measured by the meter becomes:

$$V_M = V_S \pm V_{OFFSET}$$

Whether the offset voltage adds to or subtracts from the source voltage will depend on the relative polarities of the two voltages.

For example, assume that V_S = 5 mV and that V_{OFFSET} = 250 nV. If the voltage polarities oppose one another, the voltage read on the meter will be:

$$V_M = (5 \times 10^{-6}) - (250 \times 10^{-9})$$
$$V_M = 4.75 \times 10^{-6}$$
$$V_M = 4.75 \text{ mV}$$

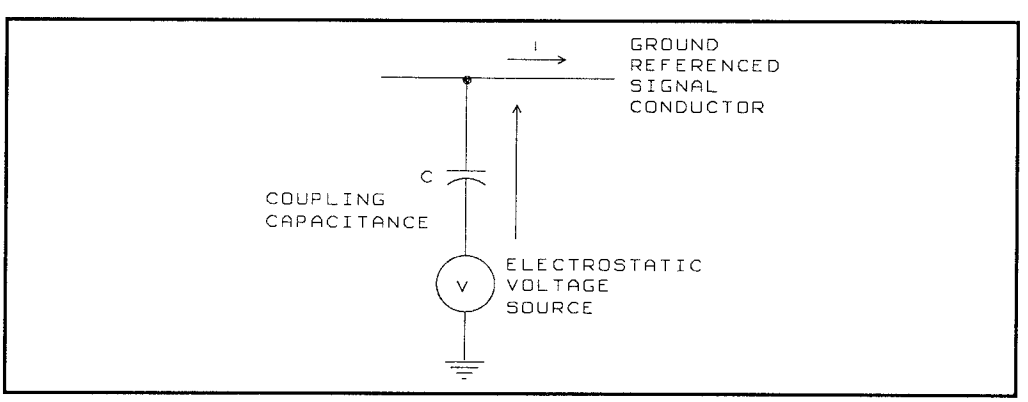

Figure 22: Electrosatic coupling.

Shielding

A dramatic way to demonstrate the sensitivity of an electrometer voltmeter is to connect two inches of wire to the HI input, and set the instrument on its 2 V range. Then rub a polystyrene pocket comb quickly across a wool suit and move the comb to within a few feet of the electrometer input. The meter will have a sizable indication, showing that a voltage can easily be induced on the input. The demonstration also illustrates the desirability of having high-impedance circuitry well shielded from unwanted and disturbing electric fields due to DC or "charge imaging" effects.

Pickup of AC fields can be equally troublesome; line frequency and RF fields are most common. The electrometer does not respond to signals outside its AC bandwidth, and AC signals that are small compared with the sensitivity of the electrometer have no appreciable effect. But when the AC voltages at the input are large, part of the AC signal may be rectified, causing errors in the indicated DC value being measured. Shielding, therefore, is usually necessary.

Shields can be built to enclose: 1) the circuit being measured, the electrometer, and the person making the measurement, such as with a screened booth; 2) the circuit being measured and the electrometer; or, 3) only the circuit being measured, with shielded leads running to the electrometer.

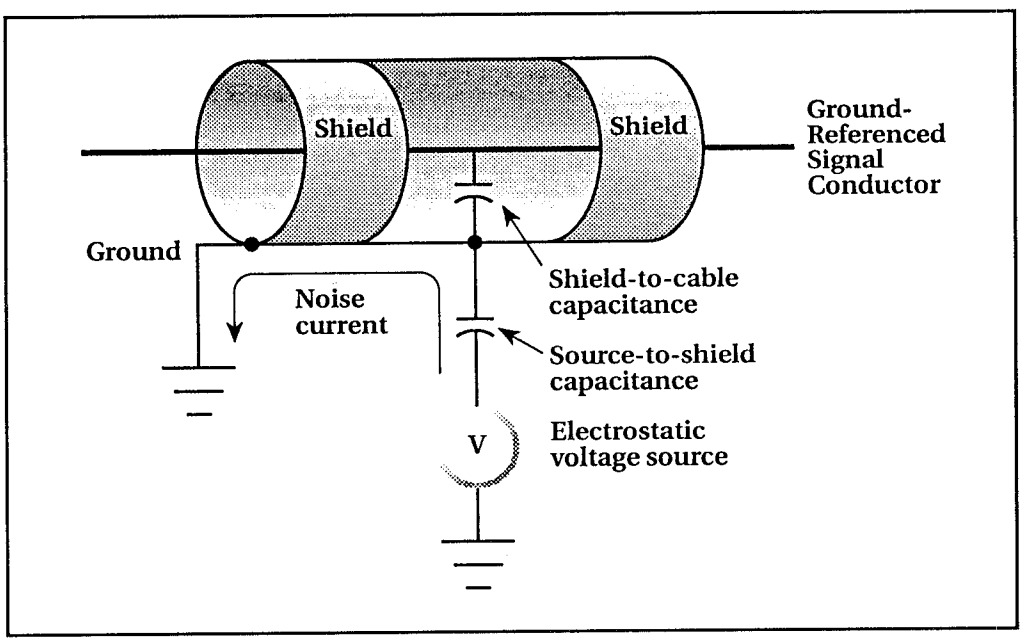

Figure 23: An illustration of electrostatic shielding.

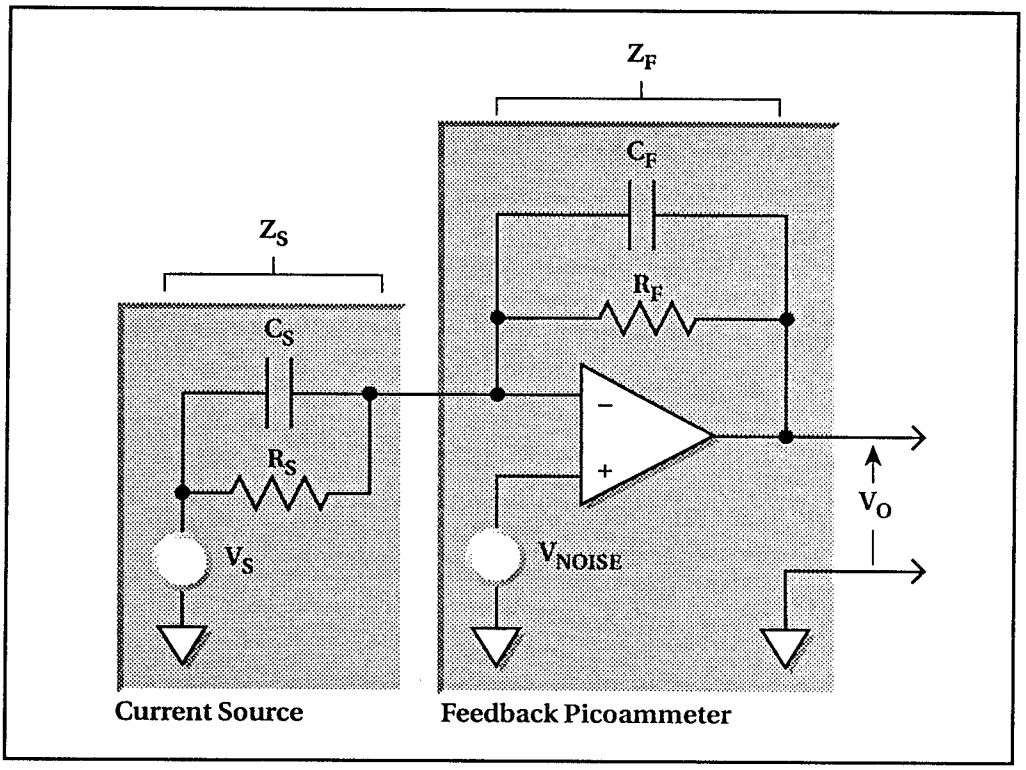

Figure 24: Simplified model of feedback ammeter.

If it is necessary to shield everything including the operator, screened enclosures can be constructed by making a wooden frame and covering it with copper screening. All pieces of the screening must be electrically connected, and the screening must be connected to the ground of the electrometer circuit.

It is not necessary to have double screening with carefully soldered seams, as with sensitive radio frequency (RF) measurements, unless strong RF fields are present. Under such circumstances, it is probably easier to move the measurement setup rather than improve the shielding. Careful attention should be paid to keeping unshielded AC power leads out of the enclosure.

A simple metal box enclosing a test setup is probably the easiest shield to make. It can be made as an extension of the electrometer input connector, and the high impedance lead can be fastened directly to the connector. The enclosure can also be separated from the electrometer and connected by a coaxial or triaxial cable, if the added capacitance and cable noise are not harmful. In connecting multiple shielded enclosures, it is important to avoid ground loops.

Range	Minimum Recommended Source Resistance
pA	1 GΩ to 100 GΩ
nA	1 MΩ to 100 MΩ
μA	1 kΩ to 100 kΩ
mA	1 Ω to 100 Ω

Table 2: Minimum recommended source resistance values for a typical Feedback ammeter.

If unguarded triaxial connections are used, the shield should be connected to the inner cable shield, which is normally connected to instrument LO. If LO is floated more than 30 V above earth ground, or is at a high impedance with respect to earth ground, an additional shield surrounding the first and connected to earth ground should be used for safety and to minimize common-mode currents.

Low-Current Measurements

Low-current measurements are subject to a number of error sources that can have a serious impact on measurement accuracy. Within the measuring instrument itself, such aspects as voltage burden and offset current can affect the measurement. Externally, possible error sources include cable leakage currents, as well as currents generated by piezoelectric or triboelectric effects. Let's see how to to minimize these effects.

Voltage Burden

An actual ammeter may be represented by an ideal ammeter, I_M, with zero

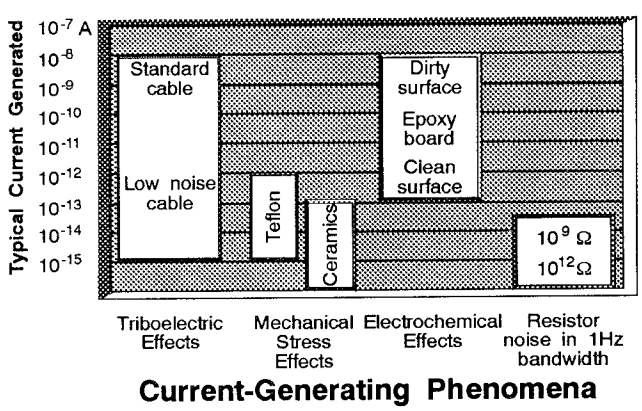

Figure 25: Typical magnitudes of generated currents.

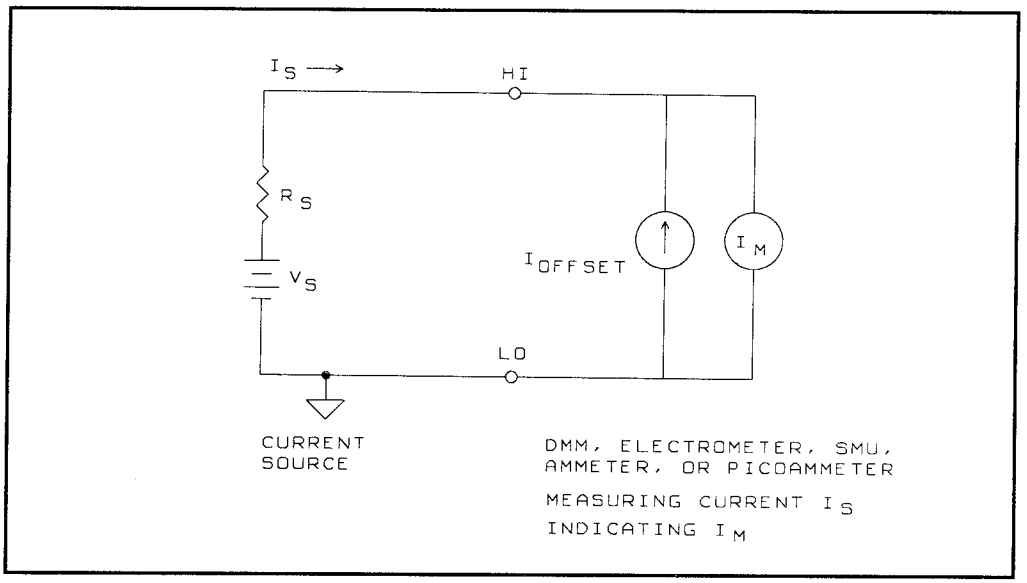

Figure 26: Effects of input offset current on current measurement accuracy.

internal resistance, in series with a non-zero resistance, R_M, as shown in Figure 20. When a current source, whose Thevenin equivalent circuit is V_S in series with R_S, is connected to the input of the ammeter, the current I_S is reduced from what it would be with the ideal ammeter ($R_M = 0\ \Omega$). This reduction is caused by resistance R_M, which creates an additional voltage drop called the voltage burden V_{BURDEN}. (In most picoammeters, electrometers, DMMs, and SMUs, the voltage burden is specified.) Taking into account the effects of V_{BURDEN}, the input current I_S is calculated as follows:

$$I_S = V_S - V_{BURDEN} / R_S$$

The percent error in the measured reading due to voltage burden is:

$$I_S\ \%\ \text{error} = 100\% / (V_S/V_{BURDEN}) - 1$$

If, $V_{BURDEN} = 0$ V, I_S becomes:

$$I_S = V_S / R_S$$

As an example, in a semiconductor circuit, V_S may be a single-junction voltage drop of 0.7 V. Assuming that $R_S = 10\ K\Omega$ and that the voltage burden is 200 mV:

$$I_S = 0.7\ V - 0.2\ V = 50\ mA / 10\ K\Omega$$

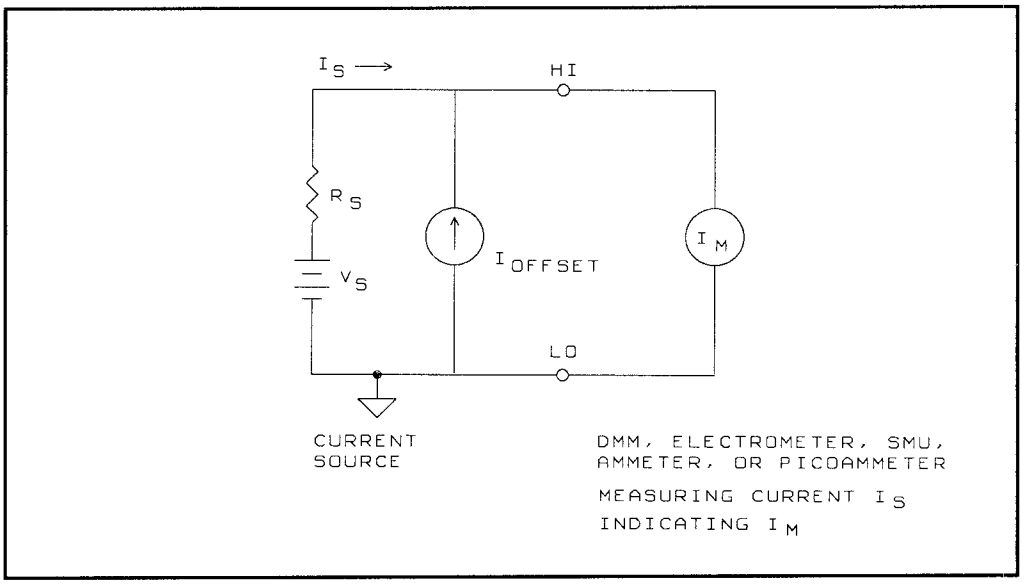

Figure 27: Effects of external offset current on current measurement accuracy.

Compared to the ideal case,

$$I_S = 0.7\ V = 70\ mA / 10\ K\Omega$$

Thus the DMM reading is 50 mA versus the ideal 70 mA — an error of 29%. In comparison, if a picoammeter is used, and the voltage burden is 200 mV:

$$I_S = 0.7V - 0.002\ V = 69.98\ mA / 10\ K\Omega$$

Thus, the picoammeter reading is 69.98 mA versus the ideal 70 mA — an error of only 0.03%.

Lead Resistance

Although lead resistance is generally much smaller than ammeter input resistance, there are cases where lead resistance could affect measurement accuracy. The effects of lead resistance are particularly detrimental with long connecting cable runs, and when high currents are used such that the voltage drop across the lead resistance is significant compared to the source voltage.

Figure 21 shows how the lead resistance, R_{LEAD} develops a small offset voltage V_{OFFSET}. This offset voltage opposes the source voltage V_S, and accuracy is reduced in exactly the same manner as in the case of ammeter input resistance we just described.

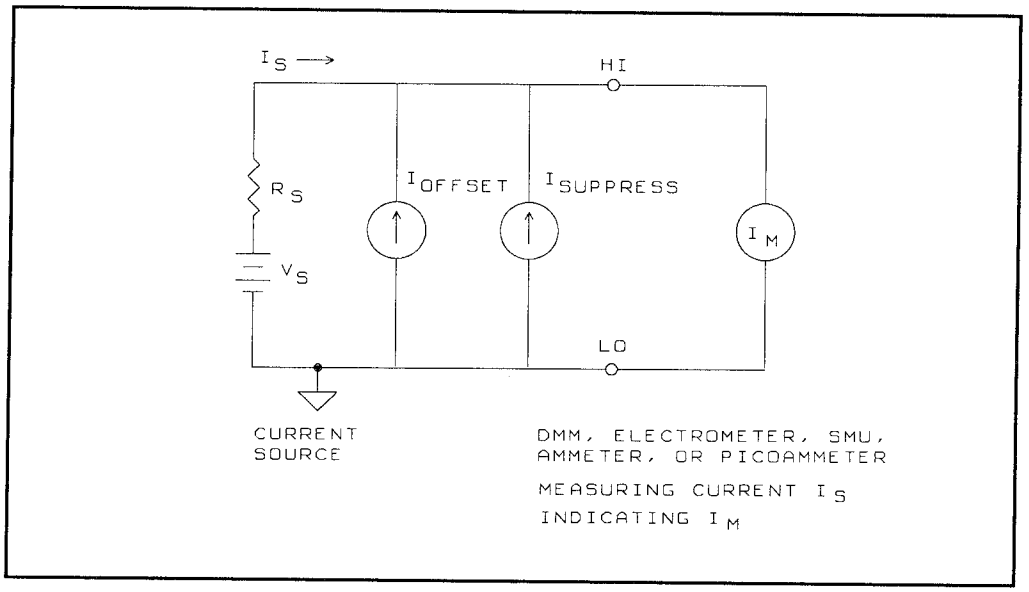

Figure 28: Using external current sources to suppress offset current.

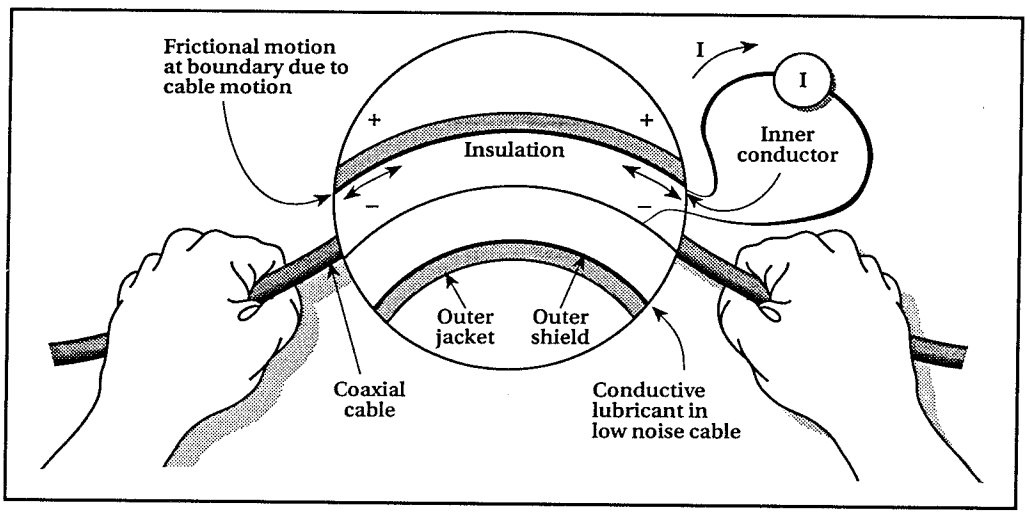

Figure 29: An illustration of triboelectric effect.

Electrostatic Coupling

At the high-impedance levels of many low-current measurements, electrostatic coupling is often a major source of interference. Figure 22 shows how an electrostatic voltage source in the vicinity of a conductor generates a current

Material	Volume Resistivity[1] (Ohm-cm)	PROPERTY: Resistance to Water Absorption	Minimal Piezoelectric Effects[2]	Minimal Triboelectric Effects	Minimal Dielectric Absorption
Sapphire	$10^{16} - 10^{18}$	+	+	0	+
Teflon® PTFE	$>10^{18}$	+	–	–	+
Polyethylene	10^{16}	0	+	0	+
Polystyrene	$>10^{16}$	0	0	–	+
Kel-F®	$>10^{18}$	+	0	–	0
Ceramic	$10^{14} - 10^{15}$	–	0	+	+
Nylon	$10^{13} - 10^{14}$	–	0	–	–
Glass Epoxy	10^{13}	–	0	–	–
PVC	5×10^{13}	+	0	0	–
Glass Phenolic	10^{13}	–	+	+	–

KEY: + Material very good in regard to the property.
0 Material moderately good in regard to the property.
– Material weak in regard to the property.

[1] All values except sapphire determined using pertinent ASTM standard test method.
[2] Stored charge effects in non-piezoelectric insulators.

Table 3: Properties of various insulating materials.

proportional to the rate of change of the voltage and coupling capacitance as follows:

$$i = C\,dV/dt + V\,dC/dt$$

For example, suppose two conductors with a 1 cm^2 area spaced by air or vacuum 1 cm apart have 0.09 pF capacitive coupling between them. With a voltage of

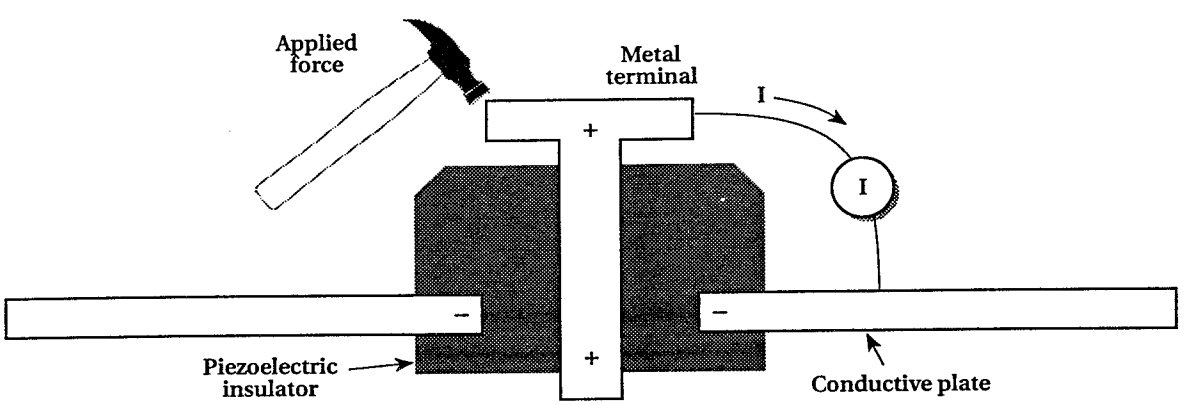

Figure 30: An illustration of piezoelectric effect.

100 V between them and a vibration or motion causing a capacitance rate of change of 0.01 pF/second (10% fluctuation), a current of 1 pA will be produced. Noise caused by static build-up can be reduced by raising the humidity or by using materials that dissipate static.

Electrostatic Shielding

Capacitive coupling between an electrostatic noise source and the signal conductors can be greatly reduced by surrounding those conductors with a grounded metal shield, as shown in Figure 23. Now, the noise current generated by the electrostatic voltage source and coupling capacitance flows through the shield instead of through the signal conductors.

Although this type of shielding significantly reduces noise coupling, it may not be sufficient for very sensitive measurements. In that case, guarding must be used to minimize the effects of both noise coupling and leakage currents.

Source Resistance

The source resistance of the device under test will affect the noise performance of a feedback ammeter. As the source resistance is reduced, the noise gain of the ammeter will increase.

Figure 24 shows a simplified model of a feedback ammeter. R_S and C_S represent the source resistance and source capacitance, respectively, V_S is the source

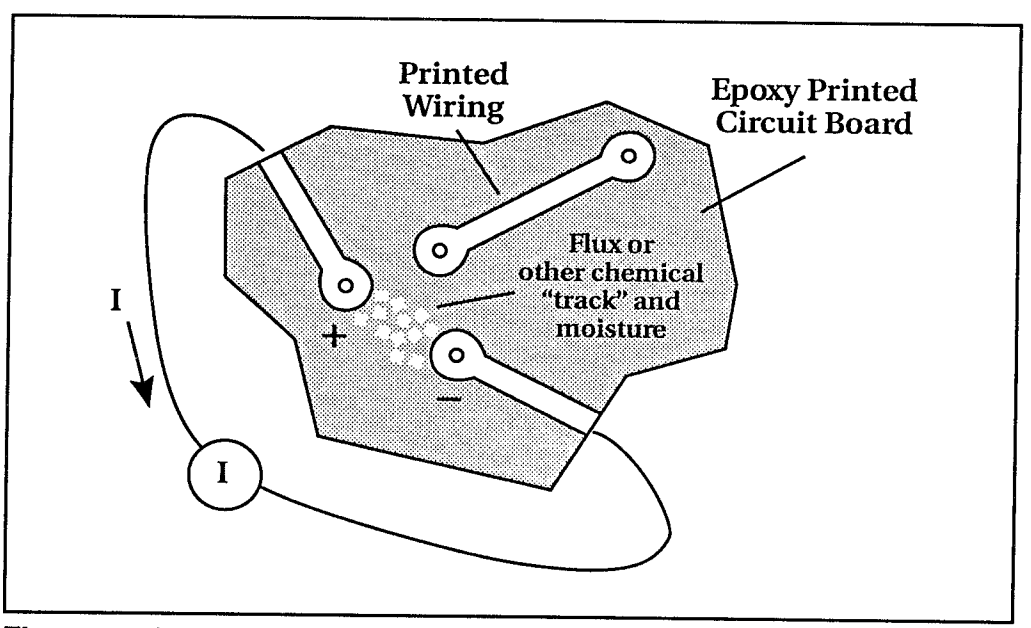

Figure 31: An illustration of electrochemical effect.

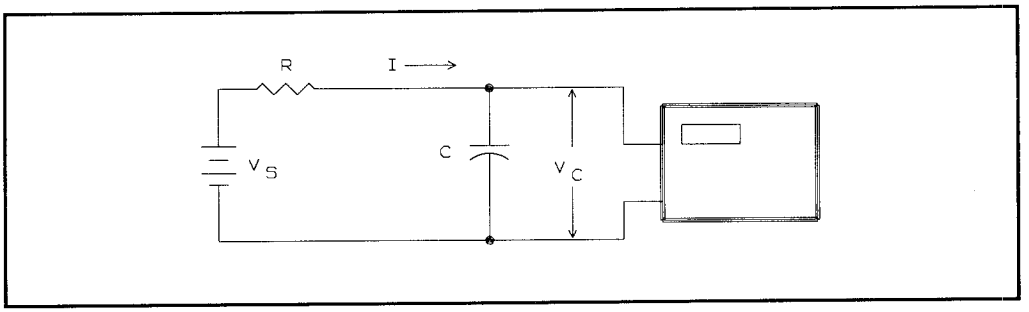

Figure 32: A shunt method of integration, using an electrometer.

voltage, and V_{NOISE} is the noise voltage. Finally, R_F and C_F are the feedback resistance and capacitance, respectively.

The source noise gain of the circuit is given by the following equation:

$$\text{Output } V_{NOISE} = \text{Input } V_{NOISE} (1 + R_F / R_S)$$

Note that as R_S decreases in value, the output noise increases. For example, when $R_F = R_S$, the input noise is multiplied by a factor of two. Since decreasing the source resistance can have a detrimental effect on noise performance, there are usually minimum recommended source resistance values based on mea-

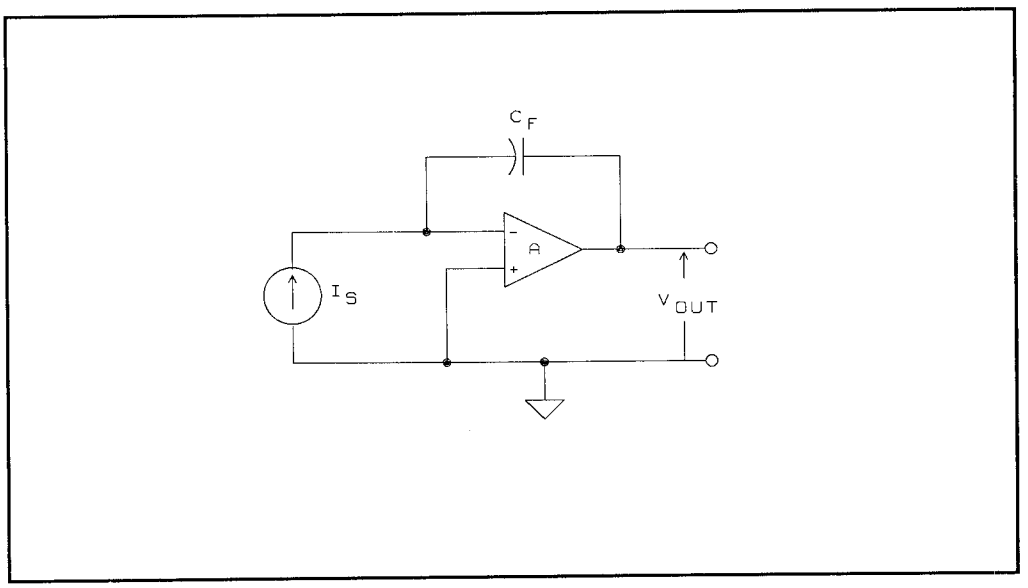

Figure 33: A feedback coulombmeter equivalent circuit.

surement range. Table 2 summarizes minimum recommended source resistance values for various measurement ranges for a typical feedback ammeter. Note that the recommended source resistance varies by measurement range because the R_F value also depends on the measurement range.

Input Capacitance

The source capacitance of the device under test will also affect the noise performance of a feedback type ammeter. In general, as source capacitance increases, the noise also increases.

To see how changes in source capacitance can affect noise gain, refer again to the simplified ammeter model in Figure 24. The elements of interest are the source capacitance C_S and the feedback capacitance C_F. Taking into account the capacitive reactance of these two elements, the previous noise gain formula must be modified as follows:

$$\text{Output } V_{NOISE} = \text{Input } V_{NOISE} \, (Z_F / Z_S)$$

Here, Z_F represents the feedback impedance made up of C_F and R_F, while Z_S is the source impedance formed by R_S and C_S. Furthermore,

$$Z_F = \frac{R_F}{\sqrt{(2\pi f R_F C_F)^2 + 1}}$$

and,

$$Z_S = \frac{R_S}{\sqrt{(2\pi f R_S C_S)^2 + 1}}$$

Note that as C_S increases in value, Z_S decreases in value, thereby increasing the

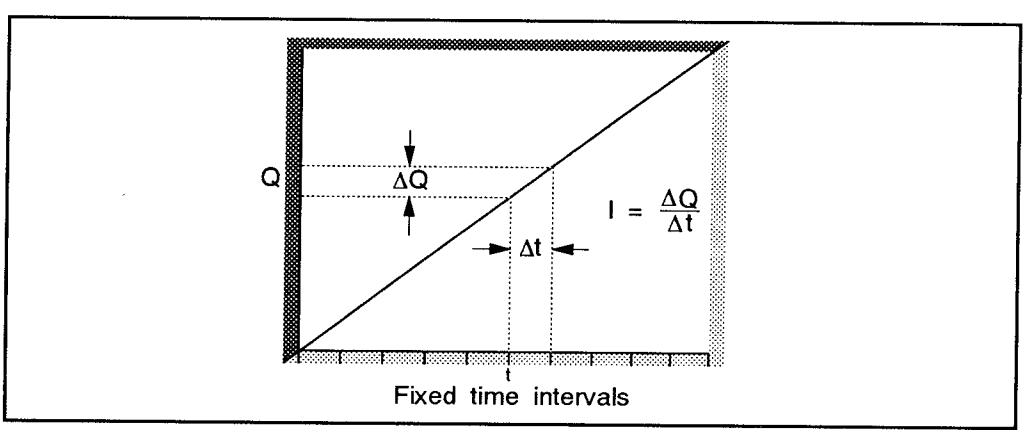

Figure 34: The fixed integration method of current measurement from charge.

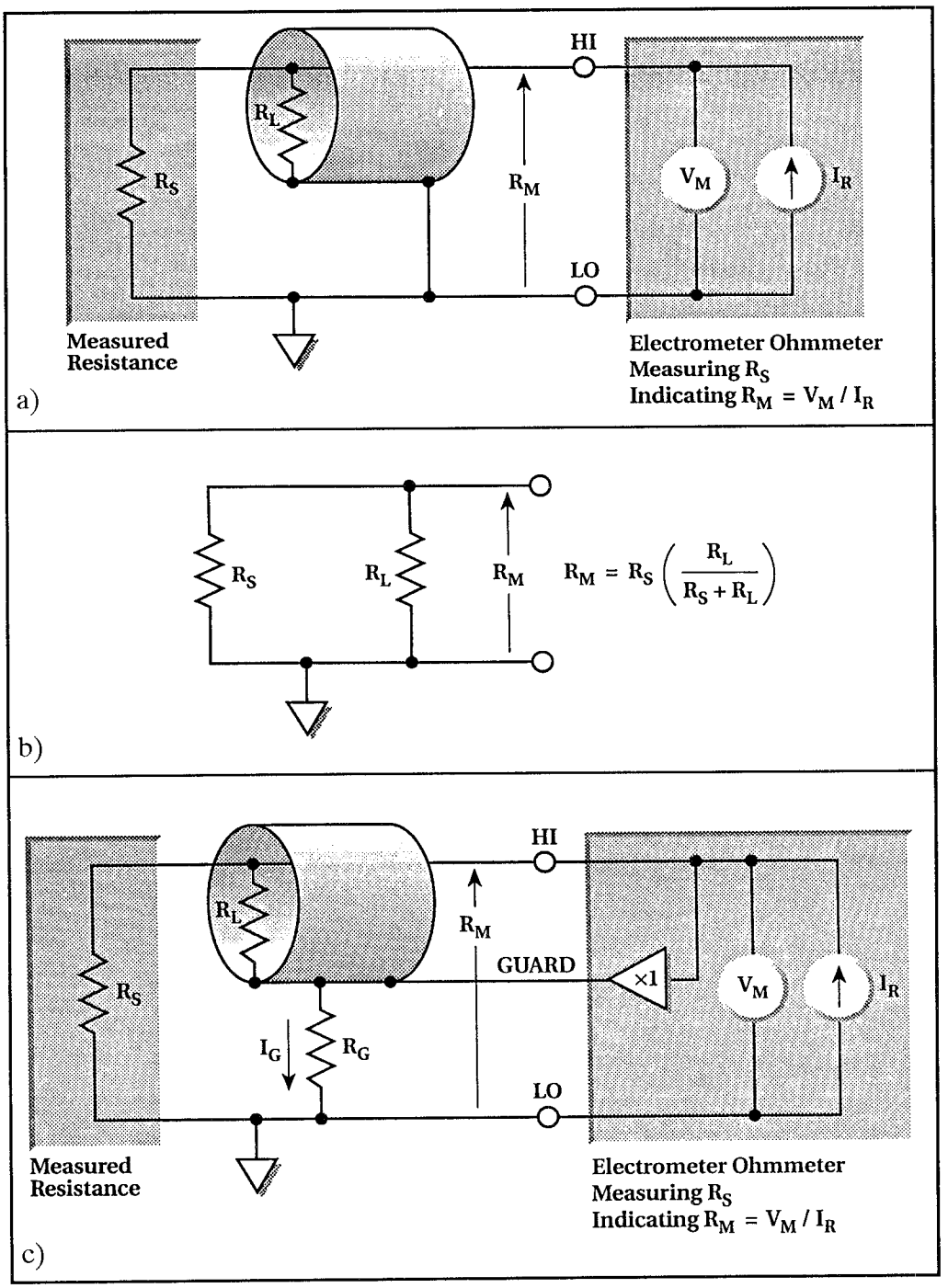

Figure 35: a) an unguarded electrometer; b) cable leakage R_L in parallel with R_S; and c) driving the cable shield with a unity gain amplifier.

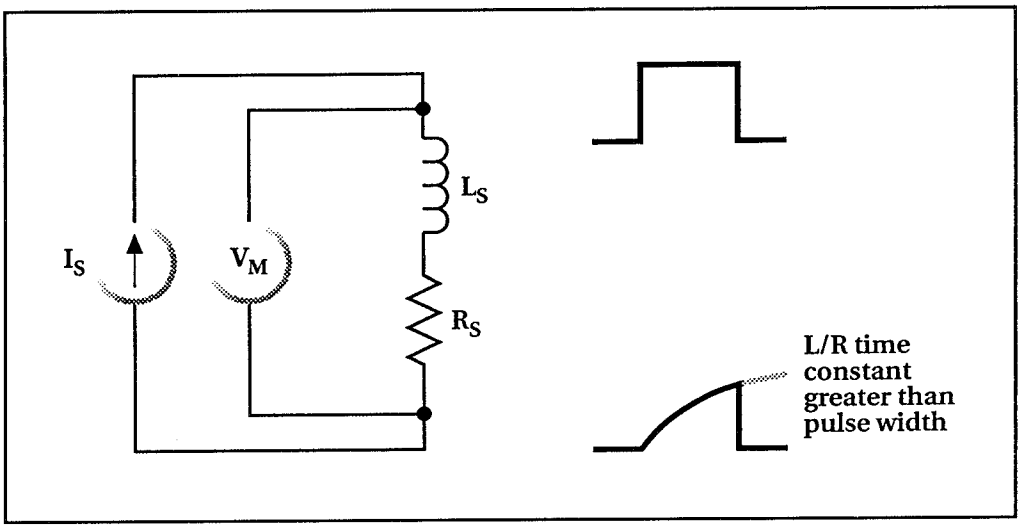

Figure 36: Testing inductive devices.

noise gain. Again, at the point where $Z_S = Z_F$, the input noise is amplified by a factor of two. Most picoammeters recommend a maximum tolerable value for C_S. You can, however, usually measure at higher source capacitance values by inserting a resistor in series with the ammeter input. Remember that any series resistance increases the voltage burden by a factor of $I_{IN} \cdot R_{SERIES}$. A useful alternative to a series resistor is a series diode, or two diodes in parallel back-to-back. The diodes can be small-signal types, preferably in a light-tight enclosure.

Generated Currents

Any extraneous generated currents in the test system will add to the desired measured current, causing errors. Currents can be internally generated as in the case of instrument input offset current, or they can come from external sources such as insulators and cables. Figure 25 summarizes the ranges of a number of generated currents.

Offset Currents

The ideal ammeter should read 0 A when its input terminals are left open. Practical ammeters, however, do have some small current that flows when the input is open. This current is known as the input offset current, and it is caused by bias currents of active measurement circuits as well as by leakage currents through insulators within the instrument.

Figure 26 shows how the input offset current adds to the measured current so that the meter measures the sum of the two currents:

$$I_M = I_S + I_{OFFSET}$$

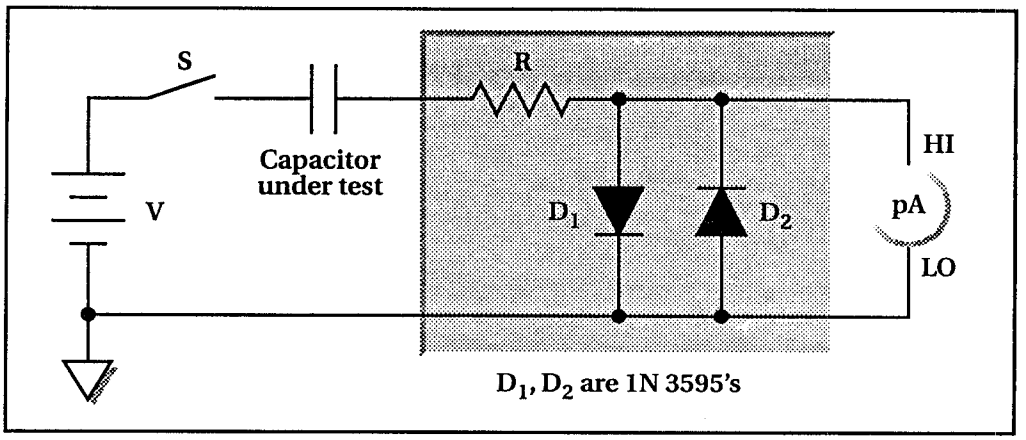

Figure 37: A capacitor test circuit with protection.

Note that the input offset current can be partially nulled by enabling the instrument current suppress or zero feature with the input terminals open.

Offset currents can also be generated externally from such sources as triboelectric and piezoelectric effects (described below). Figure 27 shows the external offset current also adds to the source current, and the meter again measures the sum of the two.

External offset currents can be suppressed with the current suppression or zero feature of the instrument, or they can be nulled by using a suitably stable and quiet external current source, as shown in Figure 28. With this arrangement, the current measured by the meter is:

$$I_M = I_S + I_{OFFSET} - I_{SUPPRESS}$$

Assuming that I_{OFFSET} and $I_{SUPPRESS}$ are equal in magnitude but opposite in polarity. Then:

$$I_M = I_S$$

The advantage of using an external current source is that I_{OFFSET} can be as large or larger than the full-range value, and only $I_{OFFSET} - I_{SUPPRESS}$ need be small.

Triboelectric Effects

Triboelectric currents are generated by charges created between a conductor and an insulator due to friction. Here, free electrons rub off the conductor and create a charge imbalance that causes the current flow. A typical example would be

electrical currents generated by insulators and conductors rubbing together in a coaxial cable, as shown in Figure 29.

"Low-noise" cable greatly reduces this effect. It typically uses an inner insulator of polyethylene coated with graphite underneath the outer shield. The graphite provides lubrication and a conducting equipotential cylinder to equalize charges and minimize charge generated by frictional effects of cable movement. However, even low-noise cable creates some noise when subjected to vibration and expansion or contraction, so all connections should be kept short, away from temperature changes (which would create thermal expansion forces), and preferably supported by taping or tying the cable to a non-vibrating surface such as a wall, bench, or rigid pole.

Other solutions to movement and vibration problems include removal or mechanical decoupling of the source of vibration. Motors, pumps, and other electromechanical devices are the usual sources.

Triboelectric effects can also occur in other insulators and conductors that touch each other. Therefore, it is important to minimize contact between insulators as well as conductors in constructing test fixtures and connections for low current

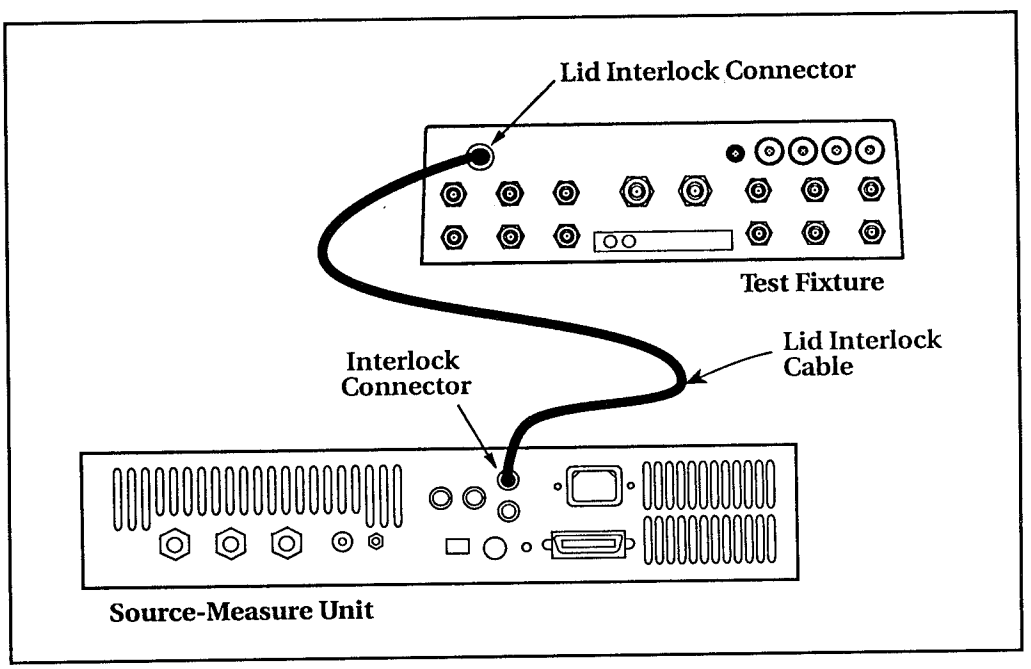

Figure 38: A typical interlock connection.

and high impedance. Table 3 summarizes the relative triboelectric effects of various insulating materials.

Piezoelectric Effects

Piezoelectric currents are generated when mechanical stress is applied to certain insulating materials such as crystalline materials used for insulated terminals and interconnecting hardware. In some plastics, pockets of stored charge cause the material to behave in a similar manner to piezoelectric materials. An example of a terminal with a piezoelectric insulator is shown in Figure 30.

To minimize the current due to this effect, it is important to remove mechanical stresses from the insulator and use insulating materials that have minimal piezoelectric effects. Piezoelectric properties of various insulating materials are also summarized in Table 3. This effect is independent of the capacitance change between the plate and terminals. Charges are moved around, resulting in current flow.

In practice, it may be quite difficult to distinguish stored charge effects (in terminals) from piezoelectric effects. Regardless of the phenomenon involved, it is important to choose good insulating materials and make connecting structures as rigid as possible.

Electrochemical Effects

Error currents also arise from electrochemical effects when ionic chemicals create weak batteries between two conductors on a circuit board. For example, commonly-used epoxy printed-circuit boards, when not thoroughly cleaned of etching solution, flux or other materials, can generate currents of a few nanoamps between conductors as shown in Figure 31.

Insulation resistance can be dramatically reduced by high humidity or ionic contamination. High-humidity conditions occur with condensation or water absorption, while ionic contamination may be the result of body oils, salts, or solder flux.

While the primary result of these contaminants is the reduction of insulation resistance, the combination of both high humidity and ionic contamination can form a conductive path, or they may even act as an electrochemical battery with high series resistance. A battery formed in this manner can source picoamps or nanoamps of current for long periods of time.

To avoid the effects of contamination and humidity, select insulators that resist water absorption, and keep humidity to moderate levels. Also be sure that all insulators are kept clean and free of contamination. If insulators become

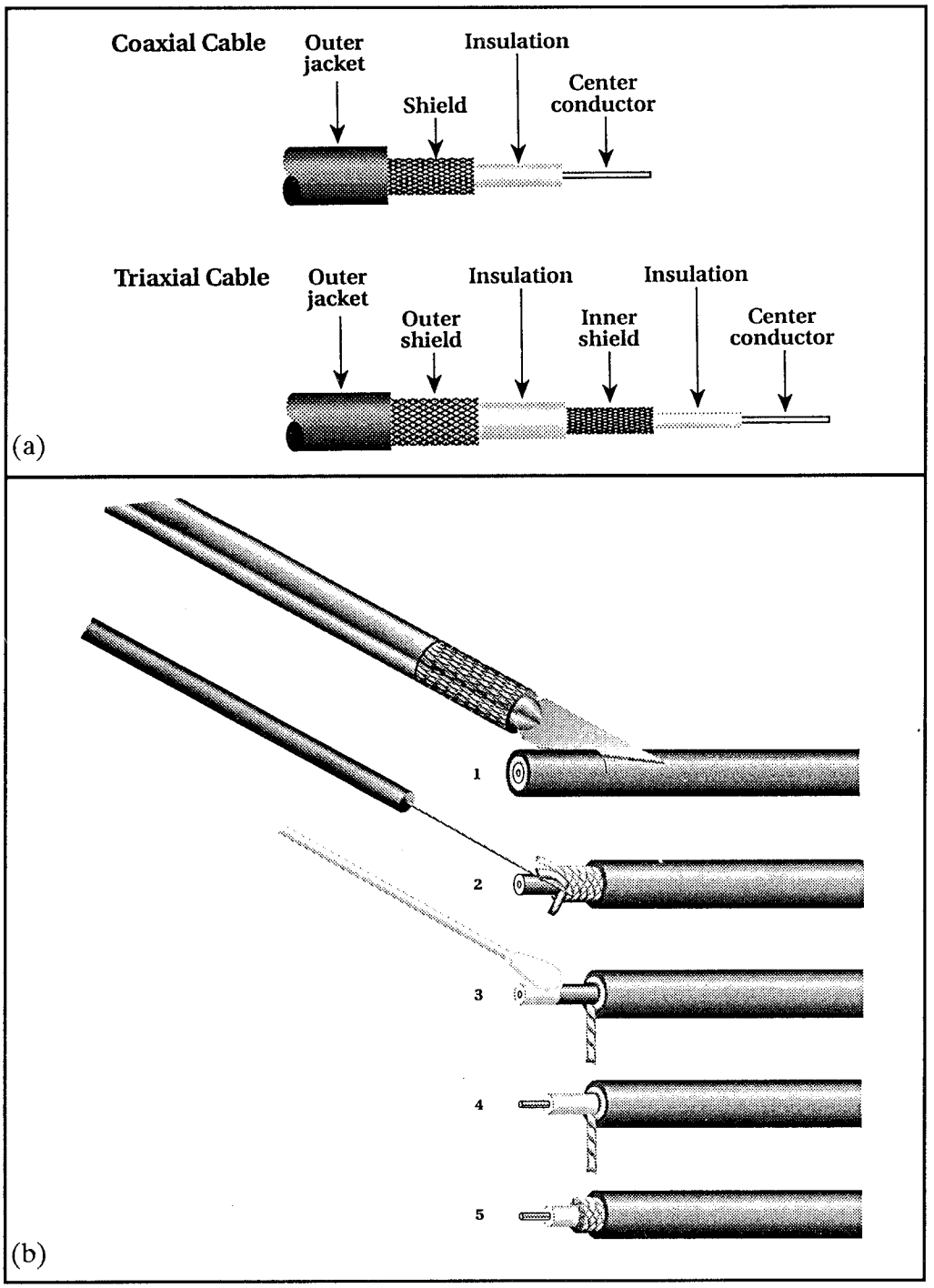

Figure 39: a) Coaxial and triaxial cables; b) an illustration of cable preparation.

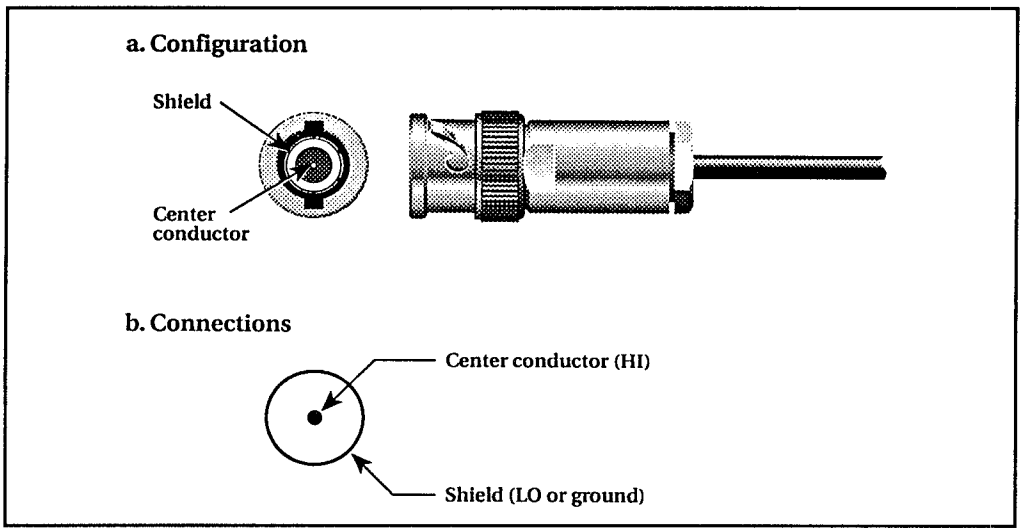

Figure 40: A BNC connector.

contaminated, a cleaning agent such as methanol should be applied to all interconnecting circuitry. It is important to flush away all contaminants once dissolved in the solvent so they are not re-deposited. Use only very pure solvents for cleaning; lower grades may contain contaminants that leave an electrochemical film.

Dielectric Absorption

Dielectric absorption in an insulator can occur when a voltage across that insulator causes positive and negative charges within the insulator to polarize because various polar molecules relax at different rates. When the voltage is removed, the separated charges generate a decaying current through circuits connected to the insulator as they recombine. To minimize the effects of dielectric absorption on current measurements, avoid applying voltages greater than a few volts to insulators being used for sensitive current measurements. In cases where this practice is unavoidable, it may take minutes or even hours in some cases for the current caused by dielectric absorption to dissipate.

In most cases, an ammeter or picoammeter is used to measure current. In some situations, however, it may be better to use the coulombs function of an electrometer to measure the change in charge and then use those charge measurements to determine the current.

Basic Charge Measurement Methods

Charge is difficult to measure directly; it must be related to an easily measured

quantity. One commonly used method of making this type of measurement is to measure the voltage across a capacitor of known value. The charge is related to capacitor voltage as follows:

$$Q = CV$$

where Q = capacitor charge (coulombs), C = capacitor value (farads), and V = voltage across capacitor (volts).

Once the rate of change in charge is known, the current can easily be determined from the charge measurement. The instantaneous current i is:

$$i = dQ / dt$$

while the long-term average current is defined as follows:

$$I_{AVG} = \Delta Q / \Delta t$$

Thus, charge can be measured, and current can be determined by making a series of voltage measurements.

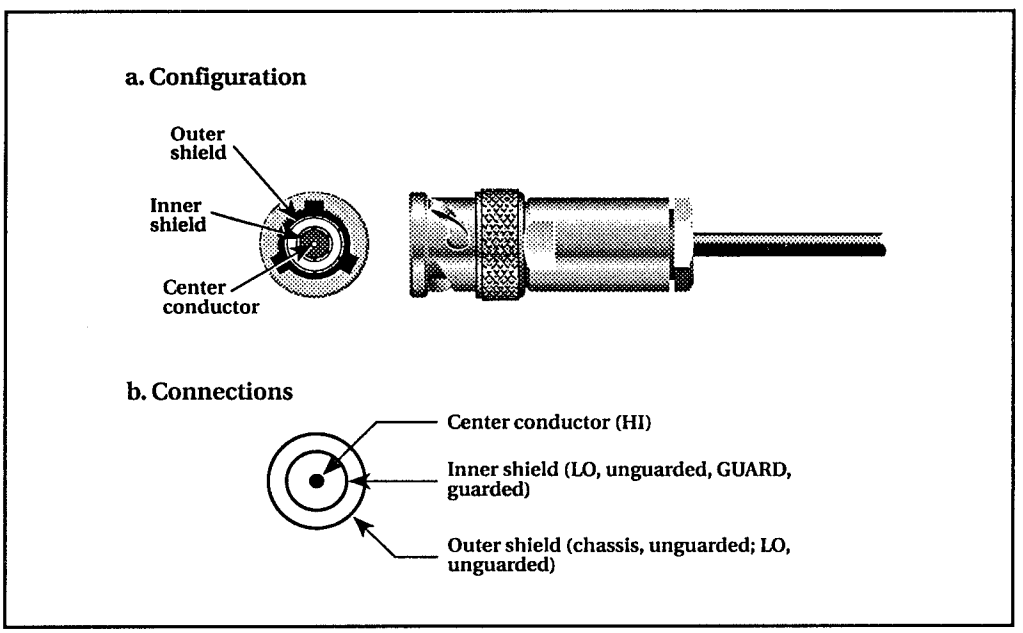

Figure 41: A triaxial connector.

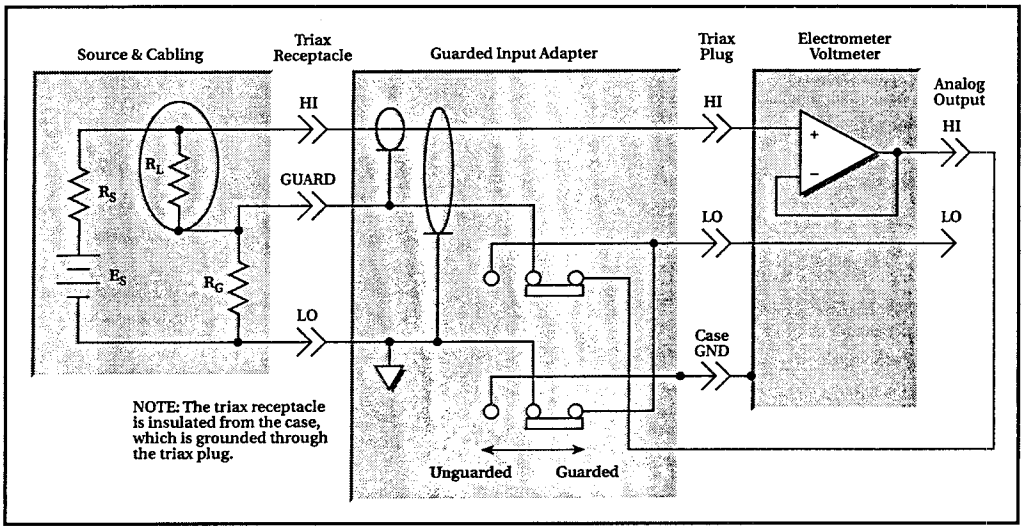

Figure 42: Guarded input adapter connections.

A Shunt Coulombmeter

A shunt coulombmeter is simply a capacitor with an electrometer voltmeter across it, connected into a circuit with a current source, as shown in Figure 32. The current flow is given by:

$$I = (V_S - V_C) / R$$

In the ideal case, V_C is much smaller than V_S and:

$$I = V_S / R$$

which means that the current in the circuit is not influenced by the measuring capacitor/electrometer combination.

However, as the capacitor becomes charged, the voltage across it increases and can result in a decreased current flow, especially if the current source is non-ideal. This situation causes errors in interpreting the results. Furthermore, the capacitor is part of an RC circuit, and the voltage increase is non-linear.

The shunt method has an added disadvantage when the current source is pulsed rather than continuous. During the off-time of the pulse, the capacitor can discharge back through the source impedance. This problem is less severe with the feedback method. Clearly, the shunt method is not best for current integration. The feedback method overcomes most of the shortcomings of the shunt

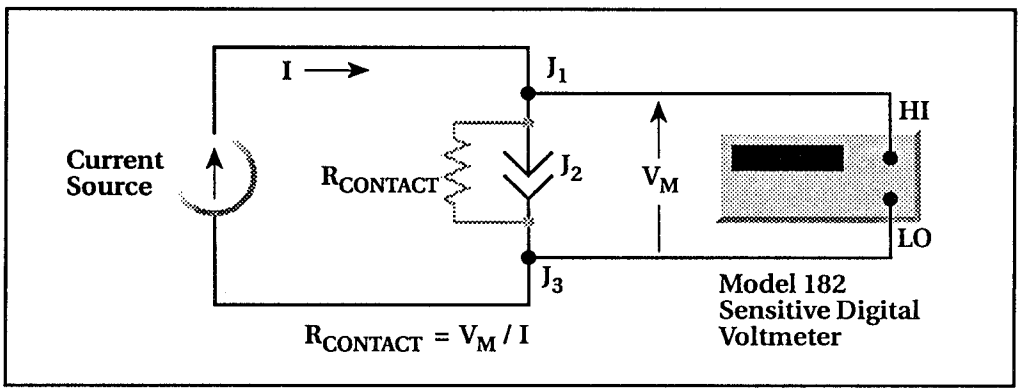

Figure 43: Measuring connector contact resistance.

A Feedback Coulombmeter

Figure 33 shows a simplified model of a feedback type coulombmeter. The input current to the circuit is I_S, the output voltage is V_{OUT}, and the feedback capacitor is C_F. The current I_S is applied to the input of the feedback coulombmeter. Since the circuit is an integrator, the charge is determined by integrating the current:

$$Q_M = \int i \, dt$$

At the output, the charge can be determined from the measured voltage and the value of the feedback capacitor:

$$Q_M = C_F V_{OUT}$$

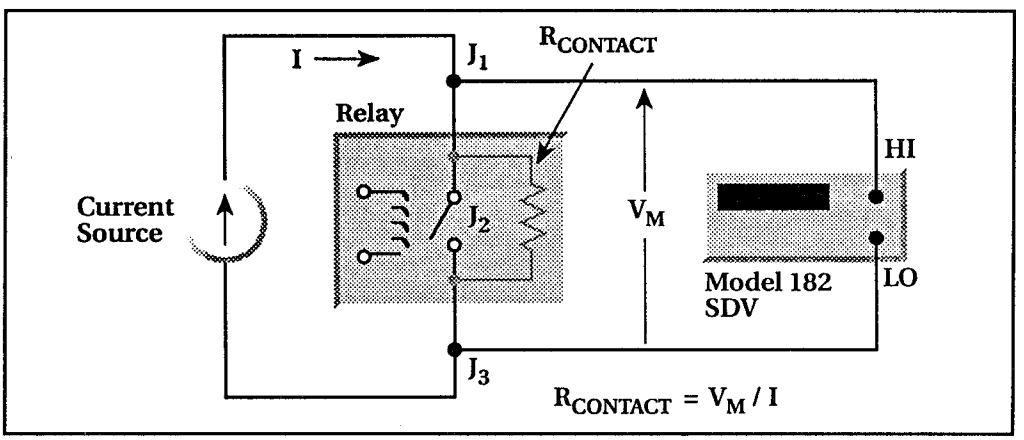

Figure 44: Measuring relay contact resistance.

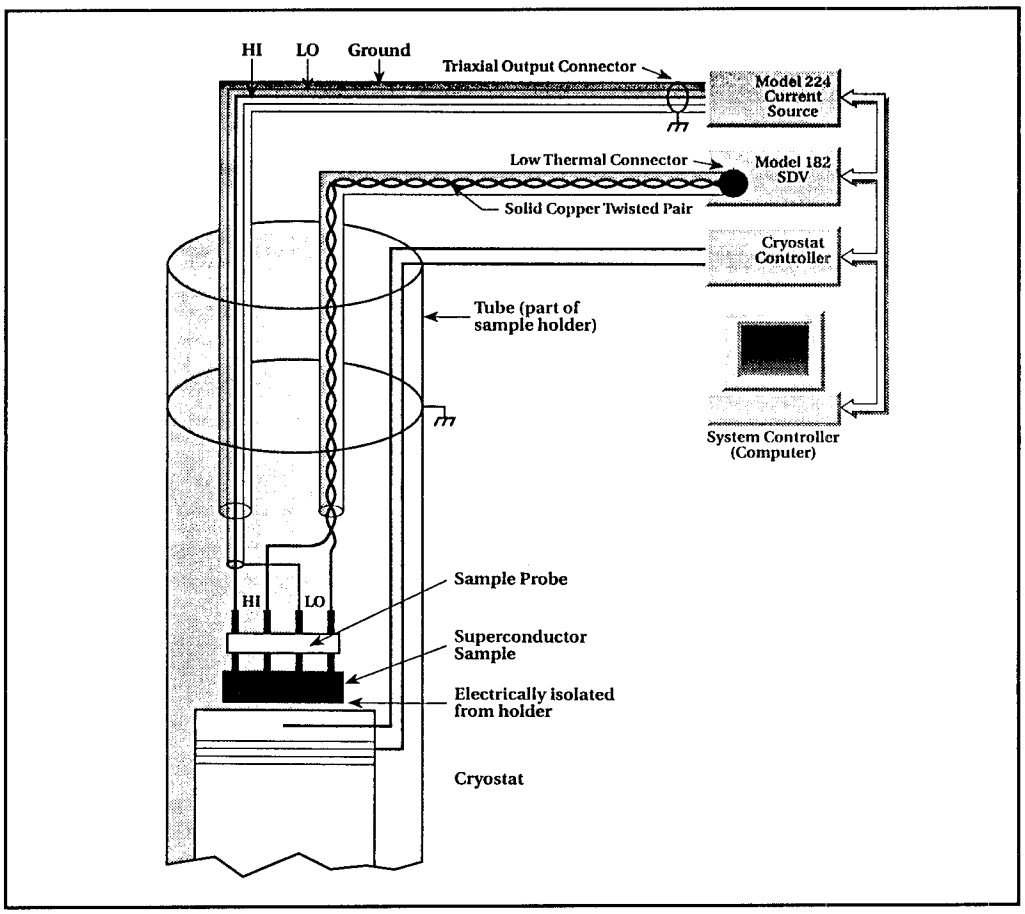

Figure 45: Automated superconductor resistance test set.

The instantaneous measured current i_M is determined from the rate of change in charge:

$$i_M = C_F\,(dV_{out} / dt) = dQ / dt$$

The long-term average current I_{AVG} can be calculated from the change in output voltage over a specific time period:

$$I_{AVG} = \Delta V_{OUT}\, C_F / \Delta t$$

As an example, assume that C_F has a value of 1 nF and that the output voltage changes linearly from 0 V to 1 mV in a time period of one second. Calculation

of charge and current under these conditions is as follows:

$$Q_M = 10^{-9} \cdot 10^{-3}$$
$$Q_M = 1 \text{ pC}$$

and,

$$I_{AVG} = 10^{-3} \cdot 10^{-9} / 1$$
$$I_{AVG} = 1 \text{ pA}$$

A variation of the above method that can be used to determine current is the fixed integration time method shown in Figure 34. In this instance, the increasing charge value is measured at specific, fixed time intervals of equal length. The average current during a given period can be determined from the slope of the line and is calculated as follows:

$$I_{AVG} = \Delta Q / \Delta t$$

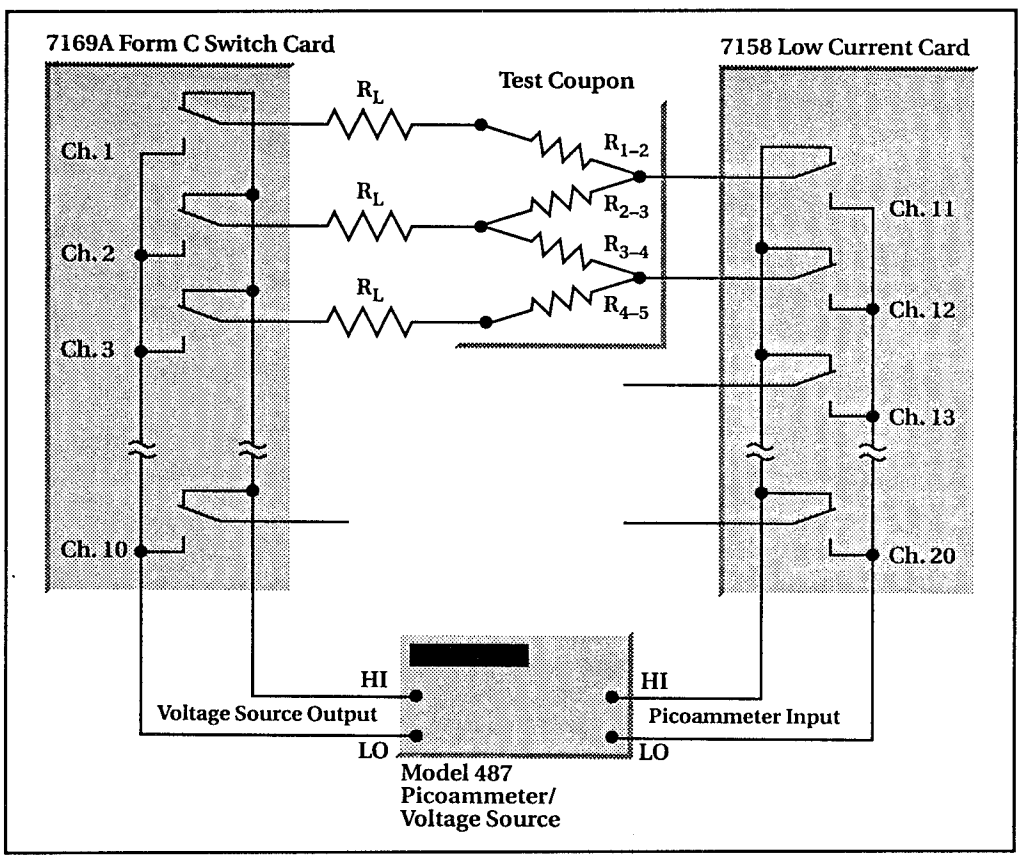

Figure 46: Test configuration for PC board insulation tests.

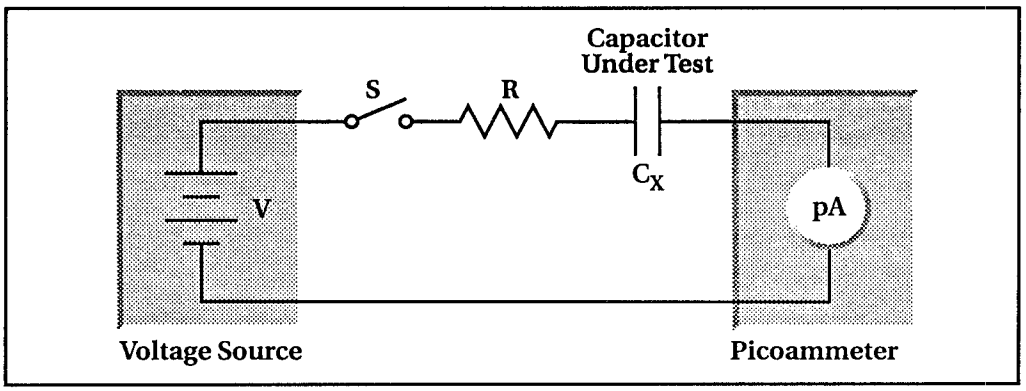

Figure 47: A simple capacitor leakage test circuit.

This method gives the average current during the time interval and produces readings at a steady rate determined by the integration period.

Applications and Practical Considerations

Now that we have examined low-level measurement theory and practices, let's take a look at some practical considerations and actual applications. First, let's consider an unguarded electrometer ohmmeter, as shown in Figure 35a. Here, an unknown resistance, R_S, has a current, I_R, forced through it and the resulting voltage drop, by Ohm's law, is:

$$R_M = V_M / I_R.$$

However, since cable leakage, R_L, is parallel with R_S, the actual resistance is a parallel combination of resistances, given by:

$$R_M = R_S (R_L / (R_S + R_L))$$

This is shown in Figure 35b. The loading effect, and other leakage resistances, can be virtually eliminated by driving the cable shield with a unity gain amplifier, as shown in Figure 35c.

Now let's look at testing inductive devices and capacitors. Shown in Figure 36, on the left, is an inductor with an internal resistance of R_M. Note the idealized current in the top right of Figure 36, which should flow through this inductive device. However, the actual current through R_S due to inductance is shown in the

bottom right of Figure 36. This is when the RC time constant (1 t) is much greater than the pulse width, a practice to be avoided!

Back-to-back diodes

Next, a capacitor shown in Figure 37, is being tested with protection via the back-to-back diodes. These diodes protect against damaging the input in case the capacitor might have been shorted and defective. While this protects this instrument, also realize that many of these instruments are designed to protect you as well.

Now refer to Figure 38, a typical interlock connection. There are also lid interlocks, designed to protect against shock from an open instrument, such as a high voltage producing instrument like an SMU.

Most of you use banana leads on a DMM; however, with the instruments we

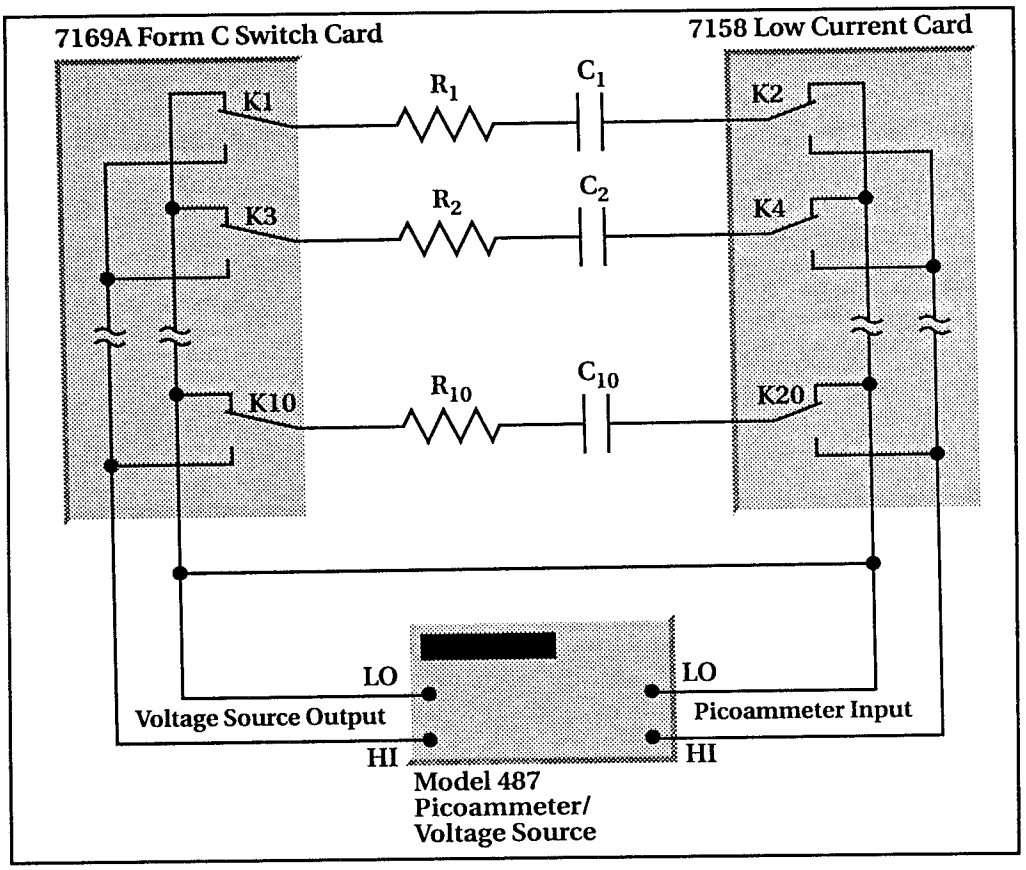

Figure 48: Capacitor leakage test system.

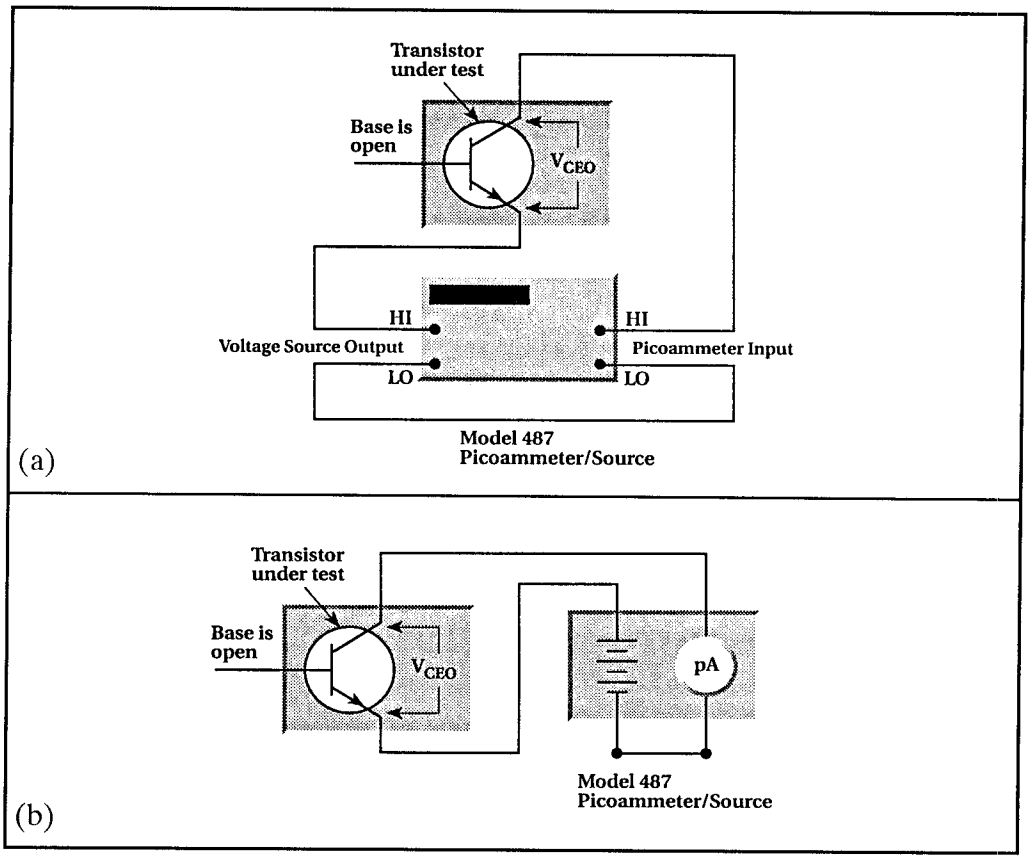

Figure 49: Test configuration for measuring I_{CEO}: a) connections and b) equivalent circuit.

have covered thus far, it is far better to use either a coaxial or triaxial lead wire. Figure 39a shows the difference between the two. The triax adds a second shield and its inner-connector can be driven at guard potential, to reduce noise and minimize circuit rise times. If you want to make your own coaxial cables, refer to Figure 39b and use the following five step procedure:

1. Gently cut through the outer insulation, *without* cutting the shield
2. Using a sharp point, unravel the shield braid
3. Twist the braid and thoroughly clean all traces of graphite with methanol. For triax, you'd repeat the above steps with the inner shield
4. Cut the center conductor to proper length, strip insulation off the center conductor, and "tin" leads with solder
5. For insertion into connectors, the braid is cut back in accordance with the assembly instructions for the particular connector type.

Figures 40 and 41 show the coaxial and triaxial connectors. These are BNC type connectors. In case you are wondering from step 3 in our cable dressing procedure, Figure 42 would be a typical example of guarding an instrument with triaxial cable.

Now for more applications, starting with a low resistance measurement exercise of connector contact resistance as shown in Figure 43. Note here that J_1 and J_2 are connection points from leads to the contact pins. J_2 is the device under test junction of the two parts of the contact.

In the next example, shown in Figure 44, relay contact testing is being performed on a normally open contact relay. The thermal EMF error junctions are labeled J_1, J_2 and J_3. For this type of relay, energize the coil and see how much heat it generates, which adversely affects contact resistance.

An Automated Set Up

If you need a more accurate measurement or are in need of testing quite a few relays, you may want to consider an automated set up as shown in Figure 45. Here you use a cryostat or very cold container. This also works well with semiconductors for applications in which superconductivity is being accurately measured. Often a PC board must be tested for uniformity of copper conductor thickness and resistance on the surface. In this case a small sample, called a "coupon" is cut from the board and probes are strategically placed on the board. If you think of the space from each probe placement to an adjacent probe placement as a resistance, then you come up with four resistance paths, as illustrated in Figure 46, $R_{1\text{-}2}$, $R_{2\text{-}3}$, $R_{3\text{-}4}$, and $R_{4\text{-}5}$. Each single pattern requires three voltage channels and two current channels.

Figure 47 is a circuit for capacitor leakage testing. In this test, a voltage is applied

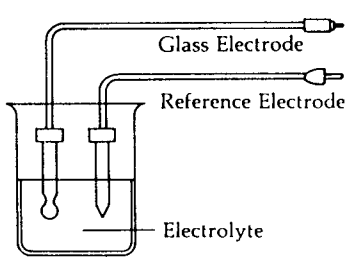

Figure 50: A pH probe system.

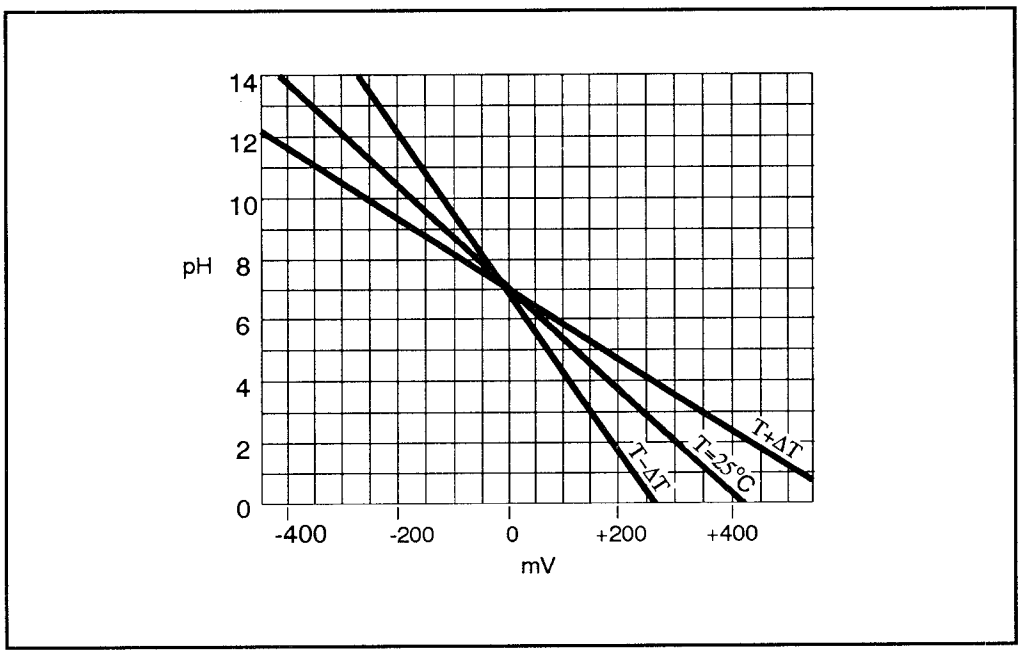

Figure 51: Output voltage at various pH values.

for a known period of time, referred to as the *soak time* and the current is measured with a picoammeter after the soak time has elapsed. If you are testing quite a number of capacitors, which is sometimes required for statistical reasons in determining tolerances in production runs, you may want to consider a more automated approach, as shown in Figure 48. Here, a Keithley model 487 picoammeter/source is used to display either resistance or leakage current and will source up to 500 VDC.

Transistor Leakage Current

Next, we'll consider a bipolar transistor's leakage current, I_{CEO}, as shown in Figure 49 a and b. First, there are two types of transistor leakage currents, I_{CEO} (collector-emitter with base open) and I_{CBO} (collector-base with emitter open). To measure these leakage currents, a reverse bias voltage is placed across two terminals with a third terminal open. A picoammeter measures the resulting current, and the resistance could be calculated from these; however, the current versus voltage data is usually just plotted on a graph.

Finally, we'll take a look at pH probes and how to measure them. A pH probe is best thought of as a 10 Ω to 100 Ω resistor in series with a voltage source. The resistor is the electrolyte, as shown in Figure 50, which has low mobility. The potential in the system cannot be measured by an ordinary DMM.

If current flows, the electrodes will polarize (an undesired condition). Therefore, the electrode potential should be measured with an electrometer which draws no current from these electrodes. The electrometer should be zero-checked while in the circuit because the resulting current flow may polarize the electrodes, too. Use two buffers (solution of precisely known pH) to calibrate each end of the acidity spectrum you wish to measure. Do not *mix,* for example, a pH buffer of 4 pH with one of 10 pH and expect an average of 7 pH. It doesn't work that way; pH is a shorthand way of expressing a logarithm. These are not linear functions and thus cannot be averaged. Refer to Figure 51, a plot of pH versus voltage generated and note that, for example, from 6.5 pH you get about 30 mV at 25°C and at 1 pH (a tremendously strong acid) you'll get about 350 mV at 25°C.
—*Vaughn D. Martin*

The author wishes to thank Keithley Instruments for allowing the use of selected material and artwork.

3/4
Soldering/Desoldering

3/4 - D
Desoldering

To replace a component, and for other purposes, it is sometimes necessary to de-solder a joint. This can be accomplished in any of three ways.

Desoldering Braid

One is to use a desoldering braid, with makes use of a length of braided wire that is often coated with resin flux. Melted solder moves away from the joint and into the braid by a capillary action, leaving the joint clear and clean. The now-soldered braid is then clipped off, exposing a fresh portion.

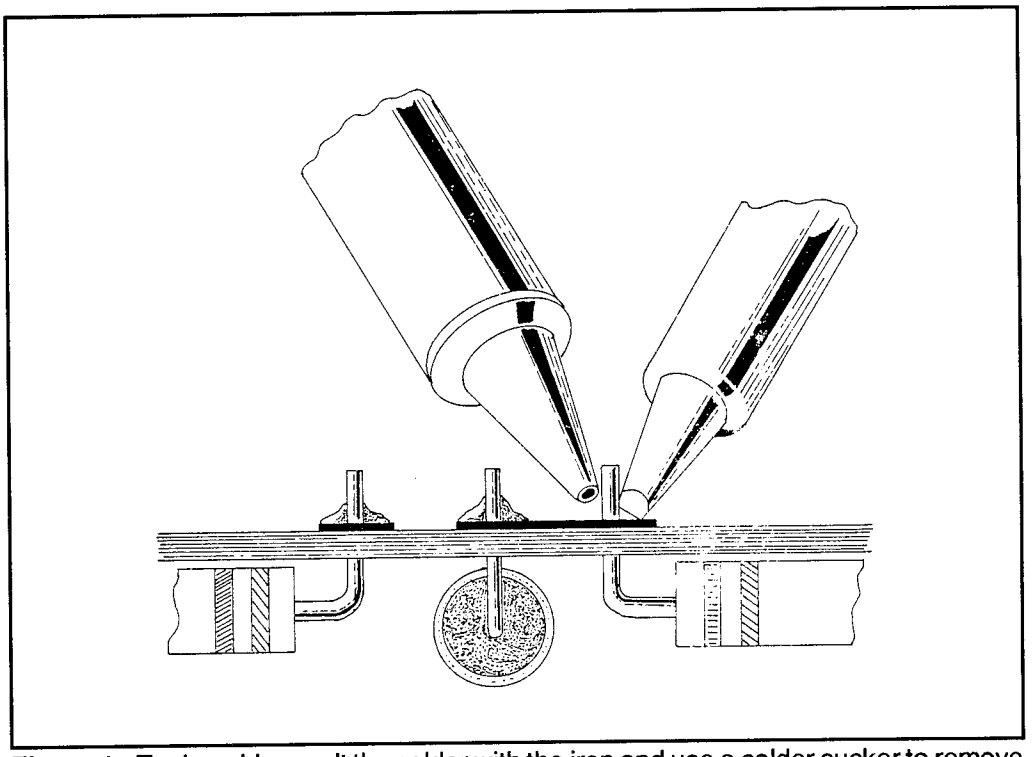

Figure 1: To de-solder, melt the solder with the iron and use a solder sucker to remove the solder.

Desoldering braids come in several widths, from very fine (about 1/8") to fairly large (usually no more than 1/2"). You can find it in strips or on reels, with the reels usually being less expensive per unit length than the precut strips.

Solder Sucker

Many prefer to mechanically remove the melted solder with a desoldering tool (as discussed in Section *"4/1 Tools for Repair"*). The solder sucker may be any of several types—from a simple syringe bulb to a tool connected to a vacuum line. One of the most popular has a metal or plastic body with a high-temp plastic nozzle.

The third method is to use a combination soldering iron and solder sucker. In this case the solder sucker is operated by a pump. This makes it both cumbersome and expensive. Because of this, such units are rarely found in small shops. In general, you won't need one.

IC Removal

One advantage is that some such units can be equipped with a special bit meant specifically for ICs. These are difficult to remove manually, or one pin at a time. This same kind of tip is sometimes available for standard soldering irons, but without the suction. In this case the joints are heated simultaneously and the chip is removed from the board while the solder is still fluid. Of this this requires that the PC board be cleaned afterward, and the solder removed.

With some circuit boards it is preferable to replace the board rather than to attempt to de-solder a component, replace it and solder in the new one. In some cases the board is multi-layered, which increases the chances of damaging the board. Other times, the components are so tightly packed on the board that getting them out requires a fine tip on the soldering iron and a pair of tweezers. Again, there is an increased chance of causing damage.

Tip ☞

Causing damage is not important if the board is discarded anyway. However, keep in mind that some boards have a trade-in value. This trade-in value will usually disappear if the board is physically damaged.

3/4
Soldering/Desoldering

3/4 - S
Soldering

Solder Types

To produce a good solder joint we must first look at the solder to be used. The type of solder should be meant for electronics. This will usually be a blend of 60% tin and 40% lead. You may also find one of the new "lead free" solders to be suitable. Either way, it must be the type with a resin (also spelled rosin) core. Plumbing-type solder with an acid core is not suitable for electronics soldering. This core is the flux. It cleans the joint and then evaporates. This helps the solder to flow in and through the joint, making it mechanically and electronically sound.

Solder Thickness

Solder is available in various thicknesses, with two of most common being 18 swg and 22 swg. The smaller the number, the smaller the solder wire. For today's high-tech electronics, the thinner 22 swg is much easier to use and provides a clean and bright joint. The thicker 18 swg solder takes longer to melt and may deposit too much solder when used on pre-tinned joints. If used on a circuit board, for example, you may create solder bridges.

Tip ☞

When using a soldering iron, position the unit so that no one trips over the cord. Be careful that the hot tip does not touch anything, particularly any electrical wires (including its own power cord).

The heat produced can be a danger to you as well, both directly (from touching the tip) and indirectly (having solder drip or splatter on you). If you do burn yourself, run cool water on the wound for at least 5 minutes. Other first aid steps may also be necessary.

Solder Joint

A soldered joint provides three things:

- an electrical path for conduction
- mechanical strength
- protection of the joint from corrosion

A poorly soldered joint is one of the most common causes of malfunctions.

Quite often what seems to be a component failing is nothing more than a poorly soldered joint.

Before soldering, be sure that the soldering tip is clean and shiny. It should remain this way at all times. Wiping the hot tip on a damp soldering sponge will help. It may become necessary to "re-tin" the tip from time to time.

Example

In the example that follows, a resistor is to be soldered into place in a PC board. The leads to the resistor are to be preformed. As in Figure 1, bend the leads into a "U" shape, so that they fit into the holes of the board.

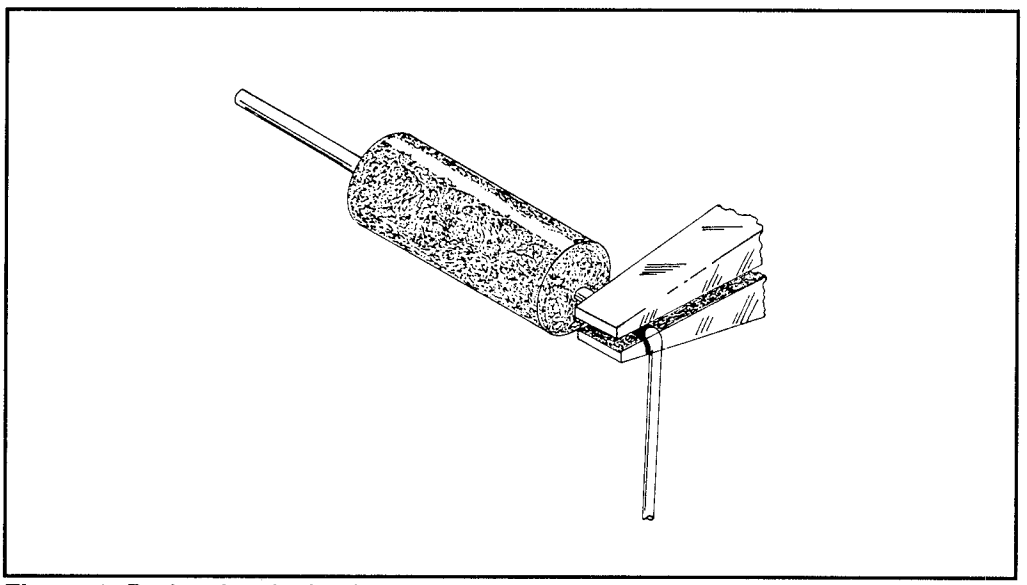

Figure 1: Preforming the leads

Figure 2 shows inserting a jumper wire (preformed as was the resistor) and the resistor. Note that the wire and resistor fit the holes exactly.

In most cases you will have to turn the board over to complete the soldering. It helps to bend the leads slightly (Figure 2) to hold the component in place.

Hold the hot tip of the soldering iron to the wire and copper surface of the board for about 3 seconds (see Figure 3). Touch the solder to the wire (NOT to the soldering iron). If the wire and board have reached the right temperature, the solder will melt and flow around the joint. When this happens remove the solder wire and iron, and allow the joint to cool.

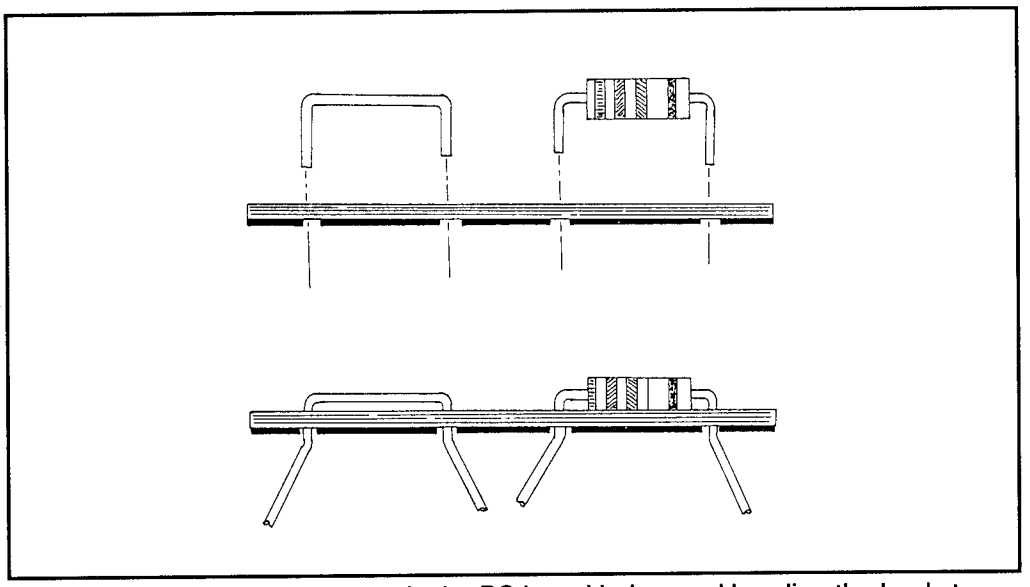

Figure 2: Fitting the components in the PC board holes, and bending the leads to hold them in place.

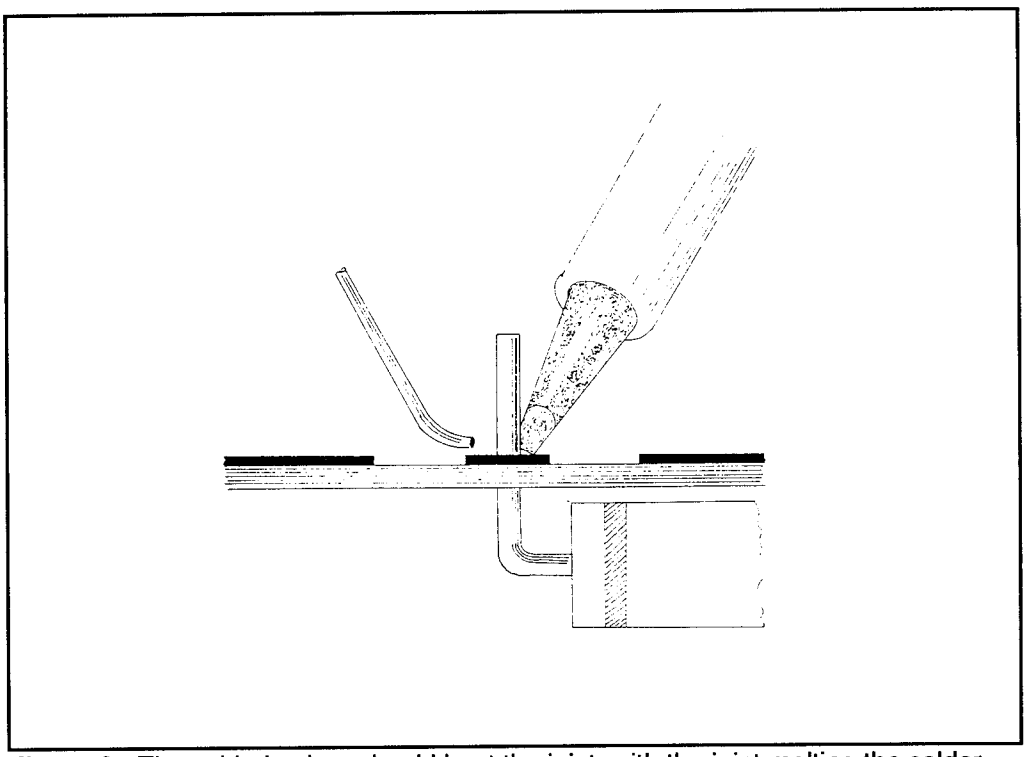

Figure 3: The soldering iron should heat the joint, with the joint melting the solder, not the soldering bit.

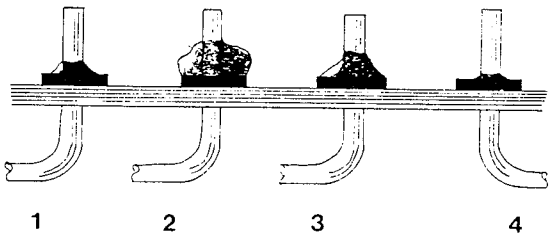

Figure 4: Good and bad soldering joints. 1. Too little solder; 2. Too much solder; 3. Good; 4. Too little solder, cold joint.

Good Joint

A good joint should be smooth, shiny and globular in shape. (See Figure 4.) If it is dull or crystalized in appearance, you probably didn't use enough heat, or made the mistake of melting the solder with the tip of the soldering iron. Either way you have what is known as a "cold joint" (sometimes called a "dry joint"). Such a joint may work for a while but will sooner or later cause trouble. A cold joint does not carry any of the three goals of soldering. (Once the joint is complete, clip the excess leads very close to the joint.)

Soldering isn't difficult, but like any skill, it requires practice. The more you practice, the better you'll be.

Checklist

1. Use the correct soldering iron and bit for the job.
2. Keep the tip clean and shiny.
3. The surfaces to be soldered must be clean and free of dirt, grease and rust.
4. The joint should be mechanically sound (although solder adds mechanical strength, do not rely on this alone).
5. The bit must make contact with all surfaces to be soldered.
6. The joint should melt the solder, not the bit.
7. The amount of solder should be correct—not too much, not too little.
8. Remove the solder and soldering iron quickly after the solder has melted—be careful to not overheat.
9. Do not disturb the soldered joint until the solder has solidified.

3/3 - TFO
Troubleshooting Fiber Optics

When you work with fiber optics it is helpful to know both measurement techniques and troubleshooting procedures. The measurement techniques described here are segmented into the following subjects: fibers, connectors, sources, detectors and systems. Later, we'll explain how to troubleshoot fiber optic transmitters and receivers, and how to check optical power and optical waveforms.

Fiber optic measurement techniques basically address two major areas: the first area is *functional* testing; an example is the measurement of fiber continuity with the help of an optical time domain reflectometer. The second area is *performance* testing, specifically performance in terms of transmission capacity. Examples for the latter are loss, dispersion and linewidth measurements.

Fiber Measurements

The most important fiber parameter is *attenuation*. Attenuation testing of multimode fibers is complicated by the propagation of many *modes*, each of which has its own propagation characteristic. Therefore, the fiber optic community has decided that for testing attenuation, the fiber should be excited with an *equilibrium mode distribution* (EMD) at 70% NA (see Figure 1). An optical source and a power meter are used for this procedure. This non-destructive

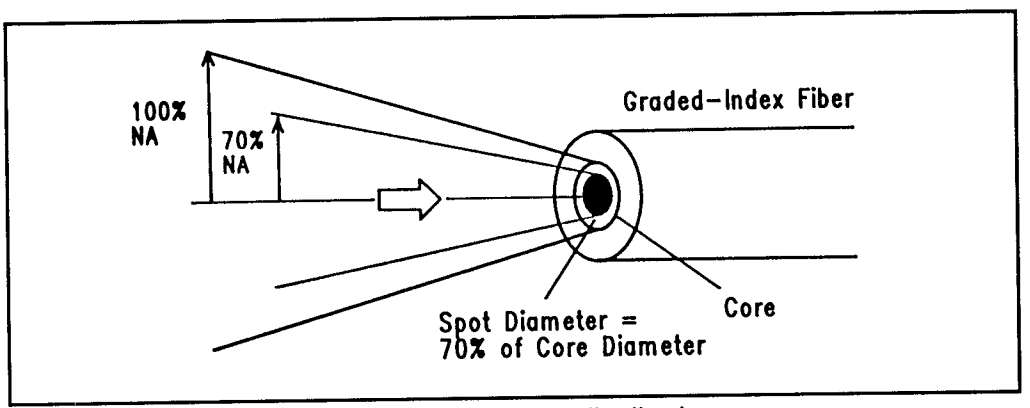

Figure 1: An illustration of equilibrium mode distribution

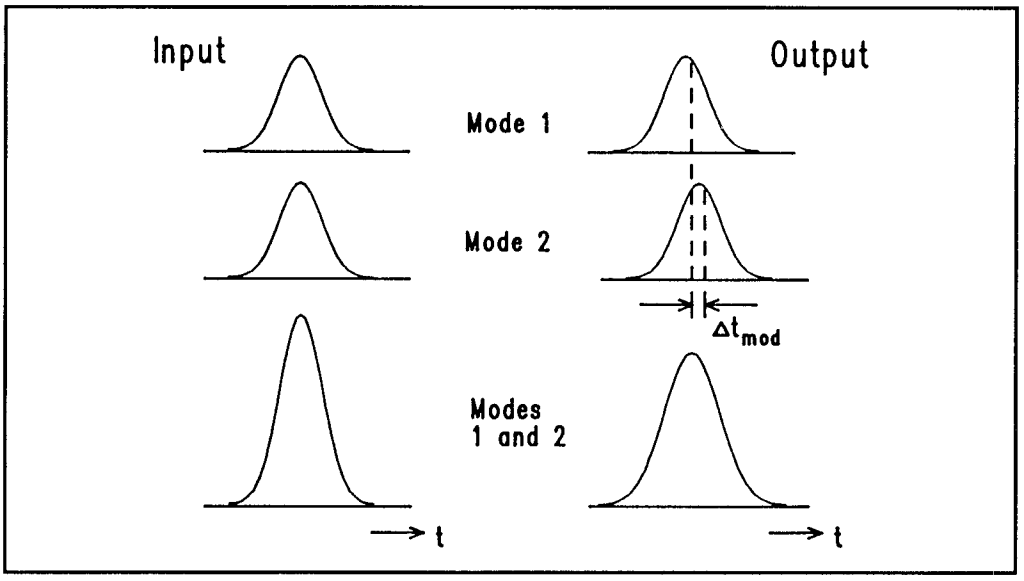

Figure 2: An illustration of multimode dispersion

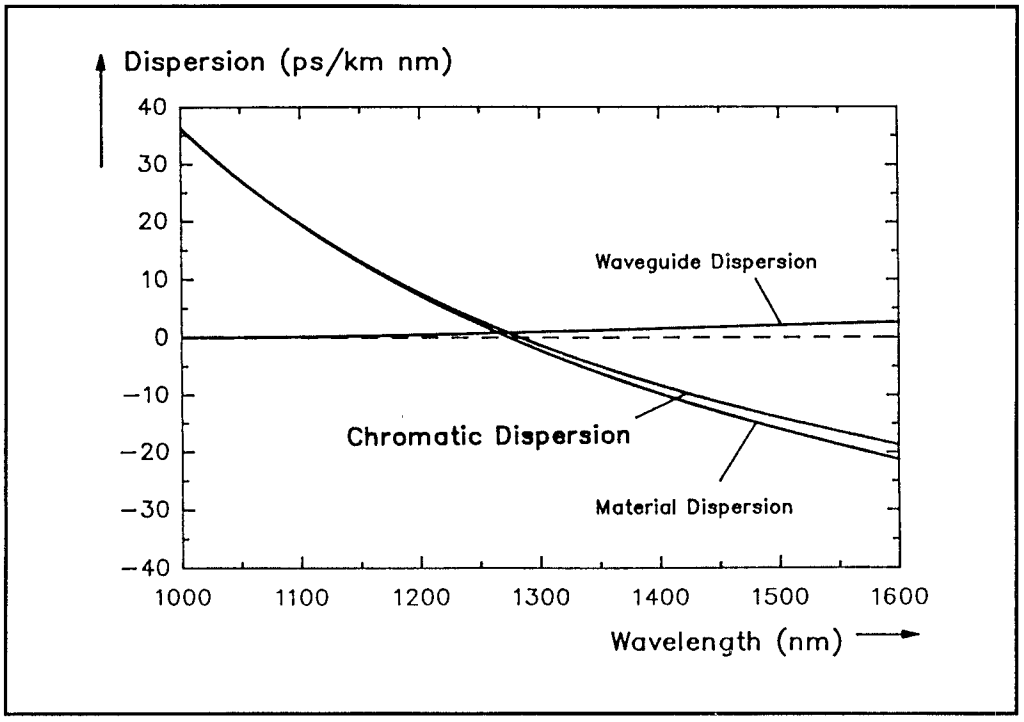

Figure 3: The effects of chromatic dispersion (pulse broadening)

measurement compares the *insertion loss* of a short reference fiber with the loss of a long test fiber. Having the same *coupling efficiency* in both cases is crucial to accuracy.

The analysis of the fiber's *backscatter* signal with an optical time domain reflectometer provides additional information on the *uniformity* of the attenuation along the length of the optical fiber.

Multimode dispersion is pulse broadening (reduced bandwidth) due to the different velocities of different modes (see Figure 2). You excite the fiber with a short pulse, in which the modal distribution is the EMD, and measure the pulse from a laser diode. *Chromatic dispersion* is pulse broadening due to the different velocities of different colors contained in the spectrum of the source (see Figure 3). Pulse broadening depends directly on the spectral width of the source. Chromatic dispersion is basically a material property. It also contributes to the reduction of the bandwidth of the multimode fiber. Chromatic dispersion cannot be measured directly.

The *numerical aperture* (NA) (see Figure 4) and the core diameter determine how much power can be launched into the multimode fiber. The NA defines the maximum angle of guided rays in the fiber. You always measure at the output of the fiber (in the far field) because the maximum angle observed at the output is approximately equal to the maximum angle at the input. A short fiber is fully excited at the input, which means all modes (rays) are excited. The *core diameter* is measured in the *near field* (see Figures 5 and 6) of the fiber output. This means that the power density at the fiber end is observed with a microscope, again with a fully excited input.

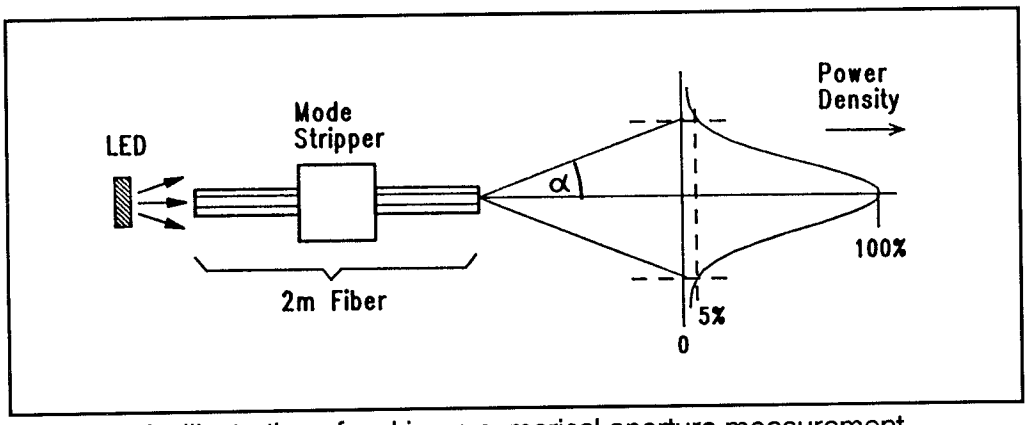

Figure 4: An illustration of making a numerical aperture measurement

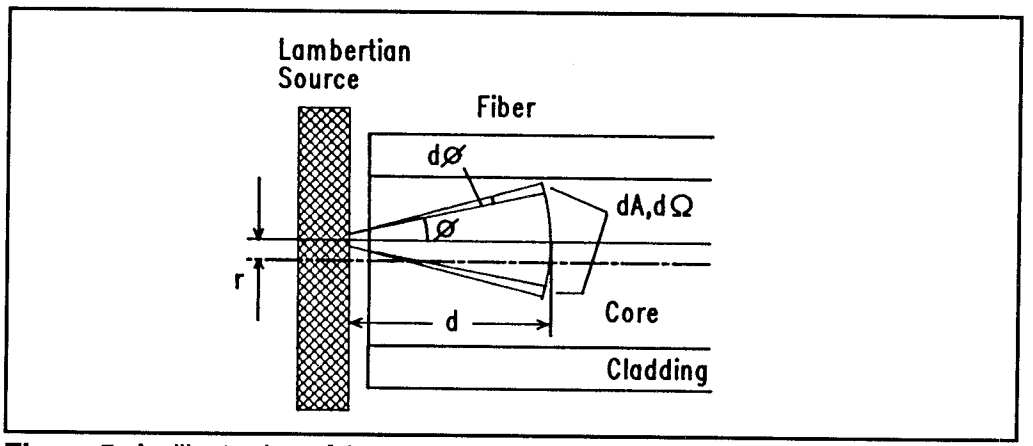

Figure 5: An illustration of the computation of the near field calculation (note that angle ϕ is the one *before* the fiber)

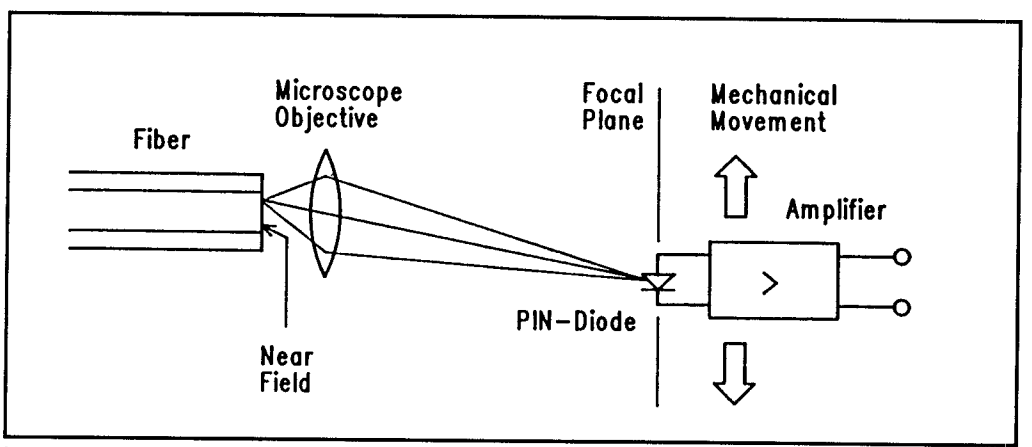

Figure 6: The transmitted near field measurement set up

Single Mode Fiber

If the measurement wavelength is longer than the cutoff wavelength of the *single mode fiber*, then only one mode will propagate. This makes attenuation measurements of single mode fibers less complicated than those of multimode fibers. In order to maintain a constant input excitation of the fiber, the measurement should be done in two steps. First, the output power at the far end should be measured. Then you cut the fiber near the input end, and measure the power again. The difference in power levels, in units of optical dB, is the attenuation. This is the *cutback method.* OTDR analysis provides attenuation uniformity information, which cannot be tested otherwise.

The bandwidth of single mode fiber is only dependent on the chromatic dispersion; multimode dispersion is negligible. Chromatic dispersion measurement launches narrow pulses of different wavelengths (colors) into the fiber. You then measure their different arrival times.

The *cutoff wavelength* of a single mode fiber defines the lowest wavelength which should be used, if high bandwidth is important (see Figure 7). Below the cutoff wavelength, more modes propagate. The cutoff wavelength is measured by launching a wide spectrum, that is, from a tungsten lamp, into a short fiber. Then the attenuation of each spectral component is measured. The cutoff wavelength will be visible as a discontinuity of the attenuation curve. Multiple modes allow more of the excited power to reach the end of the fiber. Another measurement method is based on the observation that higher order modes are much more sensitive to fiber bending than the fundamental mode.

A single mode fiber's *spot size* (see Figure 8) is more important than the core diameter. This is because the fundamental mode of the single mode fiber can be approximated by a *Gaussian beam*, both inside and outside the fiber. The Gaussian beam is fully defined by only two numbers: the spot radius and the wavelength. You can directly calculate the radiation characteristic, that is, the far

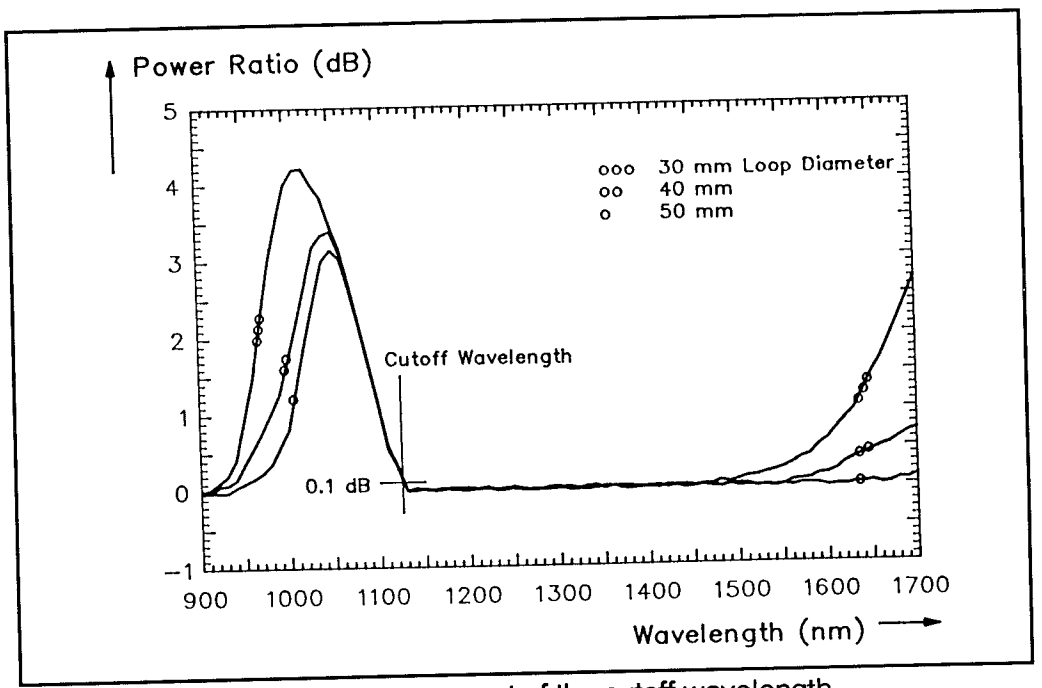

Figure 7: A graph of the measurement of the cutoff wavelength

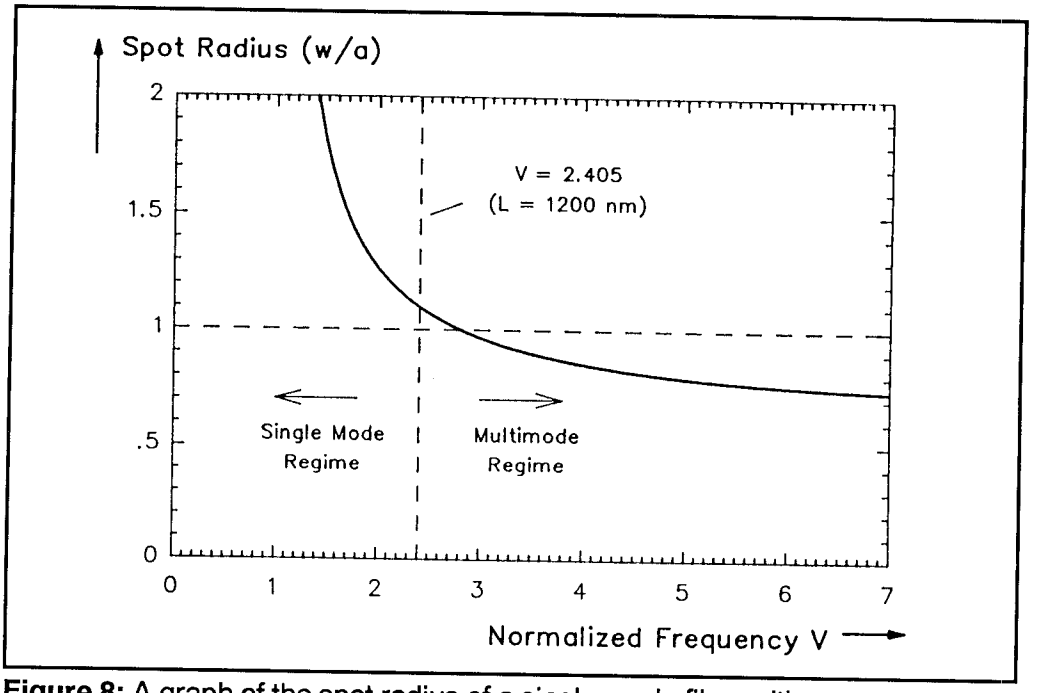

Figure 8: A graph of the spot radius of a single mode fiber with a step response driving source

field, of the end of a fiber from these numbers. Other important characteristics of the single mode fiber, for example, the waveguide dispersion, can also be deduced from the spot radius.

Connector Measurements

Optical connectors can considerably degrade the performance of transmission systems and of fiber optic measurements (see Figure 9). The insertion loss is the most important characteristic of the joining of two connectors. The measurement setup includes an LED source, two short fibers with the two connectors under test, and a power meter. The first step is the measurement of optical power that is radiated from the end of the first cable and the first connector. Then the connection is made, and the power at the end of the second cable is measured. The difference between the two measured powers (in units of optical dB) is the insertion loss (see Figure 10). In the case of multimode connectors, the test result should record the type of excitation, whether fully excited or equilibrium. The propagation of only the fundamental mode must be verified with single mode connectors.

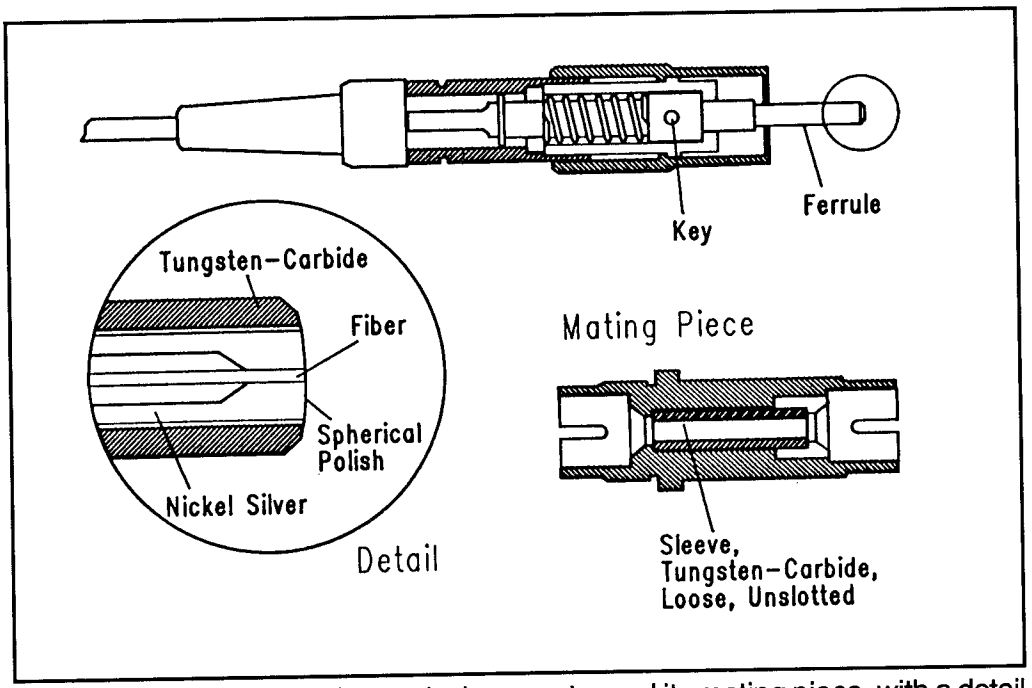

Figure 9: An illustration of an optical connector and its mating piece, with a detail of the connector end

The *repeatability* of the insertion loss is particularly important in measurement applications. You can test it by repetitively joining the connectors and measuring the insertion loss each time.

The *return loss* of single mode connectors is often of interest. The reason is the laser's sensitivity to *backreflection*, which causes additional noise and changes of the emitted spectrum. Also, the marginal return loss is always accompanied by interference in the connector pair. This causes nonreproducibility in measurement applications. The return loss is defined as the ratio of the incident optical power to the reflected optical power, in units of optical dB. It can be measured with a high resolution OTDR. A less expensive measurement is based on a laser source and a power meter (see Figure 11), by splitting the reflection from the connector pair under test with the help of a fiber *coupler*.

Source Measurements

LEDs exhibit a nearly linear dependence of the *output power* on the drive current. The power from the usual pigtail can be measured with a power meter. The actual

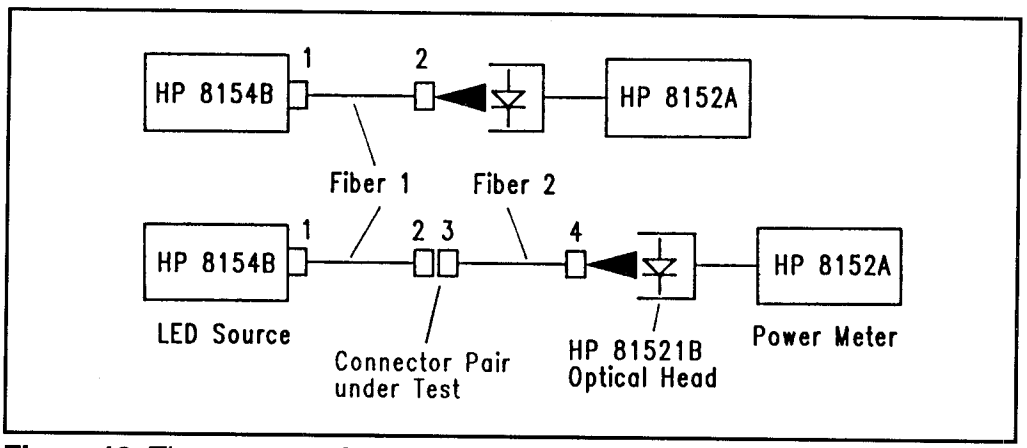

Figure 10: The test setup for making an insertion loss measurement

measurement curve yields the conversion gain and the nonlinearity. Because of the wide spectral width of the emitted radiation, the accuracy of the measurement revolves around the dependence on the wavelength of the power meter's detector and on the spectrum, and also how well each of these factors is taken into consideration.

In the measurement of the *modulation bandwidth*, the LED is intensity modulated with a sweeper/generator and a PIN diode is used to reconvert the modulated optical signal back to the electrical domain. An oscilloscope will display the frequency response. A network analyzer with an optical-to-electrical conversion before the receiver section is easier to use.

Both the *center wavelength* and the *spectral width* can be measured with an optical spectrum analyzer. This measurement is important because it has an impact on the pulse broadening on the fiber.

The *size* of the radiating area and the emitted *far field* should be measured by analyzing its microscopic image (near field). Also, the measurement of the angular power distribution some distance from the source will yield the far field. Narrow near and far fields are desirable for a good coupling efficiency to the fiber.

Laser Diodes

The dependence of the output power on the driving current of a *laser diode (LD)* can be measured with a variable current source and a power meter. The threshold current is the current that defines the onset of the stimulated emission, that is, the desired lasing function. Another important measurement result is the conversion

gain, in units of Watts/Ampere. Pulse excitation may be better to use than DC excitation of the LD because of the elevated temperature of the chip during the DC drive. Think of this as pulsing a visible light LED versus having its maximum rated DC current flow through it. It is the same principle.

You can measure the *modulation bandwidth* of LDs in the same way as just described for LEDs. The main difference is the much higher bandwidth of LDs, which understandably requires measurement equipment with higher bandwidths.

You should measure both the *center wavelength* and the number of modes with an optical spectrum analyzer. These measurements are adequate for LDs used with conventional intensity modulated, direct detection systems. The measurement of the *chirp*, that is, the undesired wavelength shift caused by intensity modulation, may be important for highest performance in direct detection. For *coherent* applications, use laser diodes emitting a single wavelength (longitudinal mode). In this case, the measurement of the spectral *linewidth* is important. Interferometric methods are capable of measuring both the chirp and the linewidth.

The radiation characteristic of a laser diode can be approximated by an elliptic

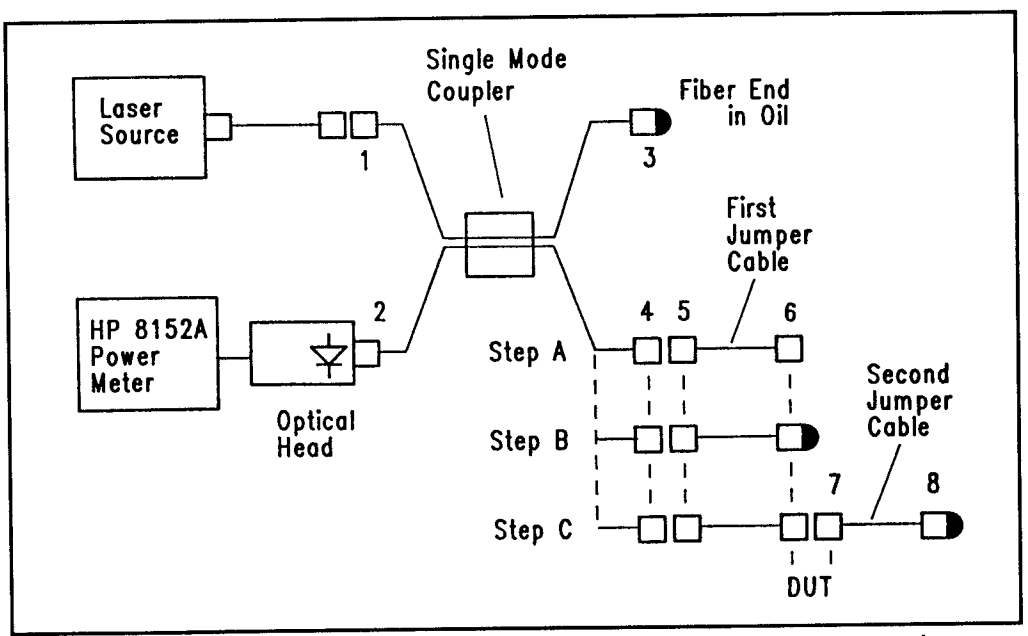

Figure 11: The test setup for the measurement of a connector's return loss

version of the Gaussian beam (see Figure 12). The ellipticity is due to a long emitting area stripe. A far field measurement delivers the parameters of the Gaussian beam. These parameters allow you to compute the coupling efficiency, especially the coupling efficiency to single mode fiber (see Figure 13).

Detector Measurements

Optical detectors are made for two purposes: signal detection in receivers and optical power measurement. In the first case, the smallest possible *diameter* is desirable. This is because the *noise equivalent power* (NEP) is proportional to the active diameter. The bandwidth is inversely proportional to the active area. In the power measurement case, a large area is desirable because of the achievable measurement accuracy.

The *responsivity* of a photodetector is the ratio of the generated current to the incident optical power. The responsivity of PIN diodes (see Figures 14 and 15) and avalanche photodiodes (APDs) is strongly dependent on the wavelength. A constant quantum efficiency (generated electrons per photon) ideally results in a responsivity proportional to the wavelength. The actual responsivity may be quite different. The measurement is normally made with a wavelength calibrated combination of a tungsten lamp and a tunable monochromator. In APDs (see Figures 16 and 17) using high voltage multiplies the number of generated carriers. The *multiplication factor* can also be measured with this method.

You can test the *demodulation bandwidth* of a photodetector by exciting it with

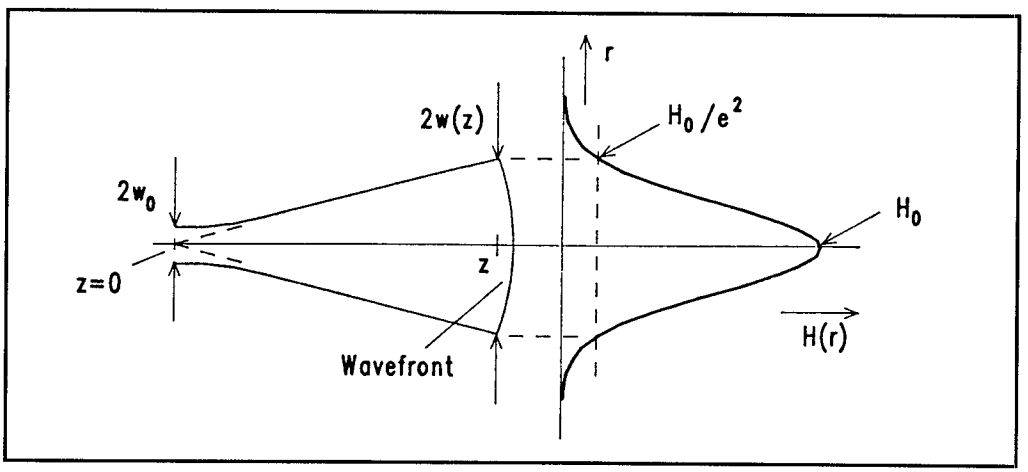

Figure 12: An illustration of a Gaussian shaped beam

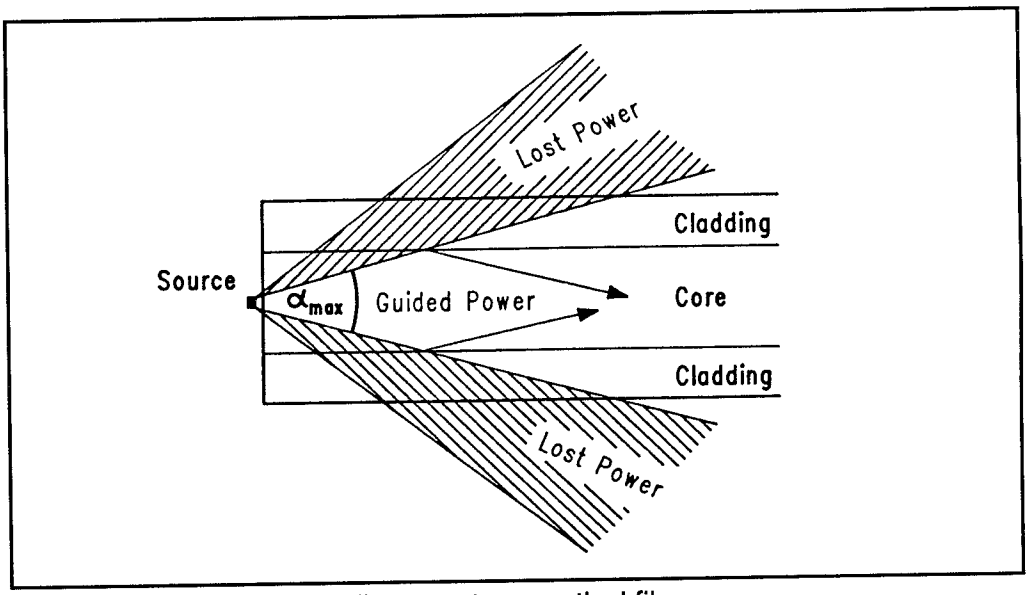

Figure 13: Coupling a small source to an optical fiber

a sinewave modulated laser source. A network analyzer, this time with an electrical-to-optical conversion of the generator signal, is an ideal set-up. Measurement of detectors with bandwidths of several GHz is more difficult because of the limited modulation bandwidths of laser diodes. One possible solution is external modulation of the LD with a modulator (see Figures 18 and 19). You could also mix the beams of two narrow linewidth laser diodes with the help of the nonlinear electric field-to-current conversion of the detector under test. The resultant frequency of the generated photocurrent is the difference between the two optical frequencies, just like with RF radio frequencies.

A very important characteristic of a photodetector is its noise equivalent power, because of its influence on the achievable sensitivity of the receiver. Ideally, the NEP is proportional to the square root of the *dark current*. This allows an estimation of the NEP. More accurate is a measurement with an electrical spectrum analyzer, to characterize the spectral density of the NEP. In APDs, the *excess noise* factor is an additional noise contribution that is caused by the multiplication process. It can be measured with the same spectrum analyzer.

System Measurements

If you are responsible for the proper function of a fiber based communication *system* you'll rarely be interested in device characteristics. Your main concern

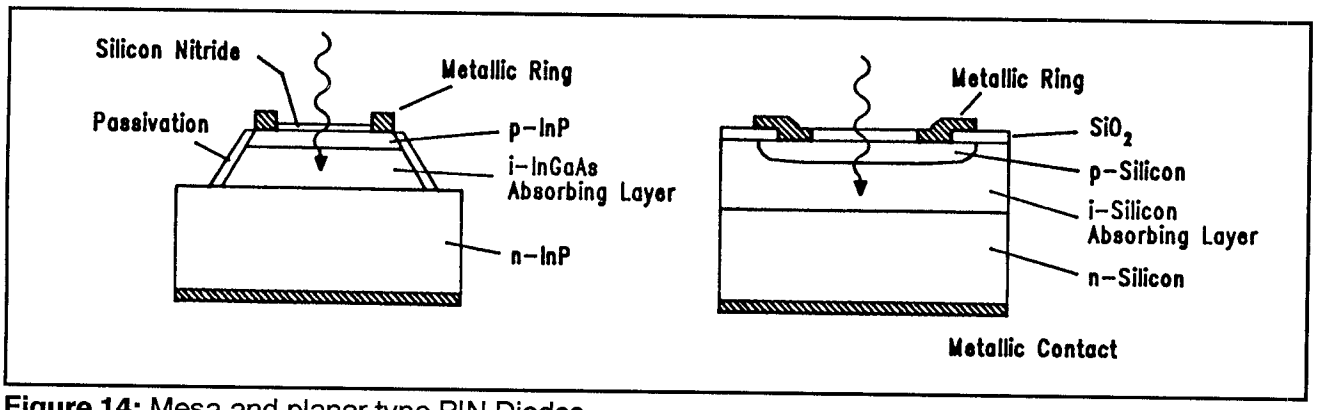

Figure 14: Mesa and planar type PIN Diodes

is functionality. The optical time domain reflectometer really helps here because it is capable of detecting the location of an interruption of the cable.

The second important factor in a system is the *bit error rate (BER)*. This is defined as the number of received false bits divided by the total number of transmitted bits. A typical requirement is a BER of 10^{-9}; any larger number indicates a degradation of the system. The BER can be tested by modulating the

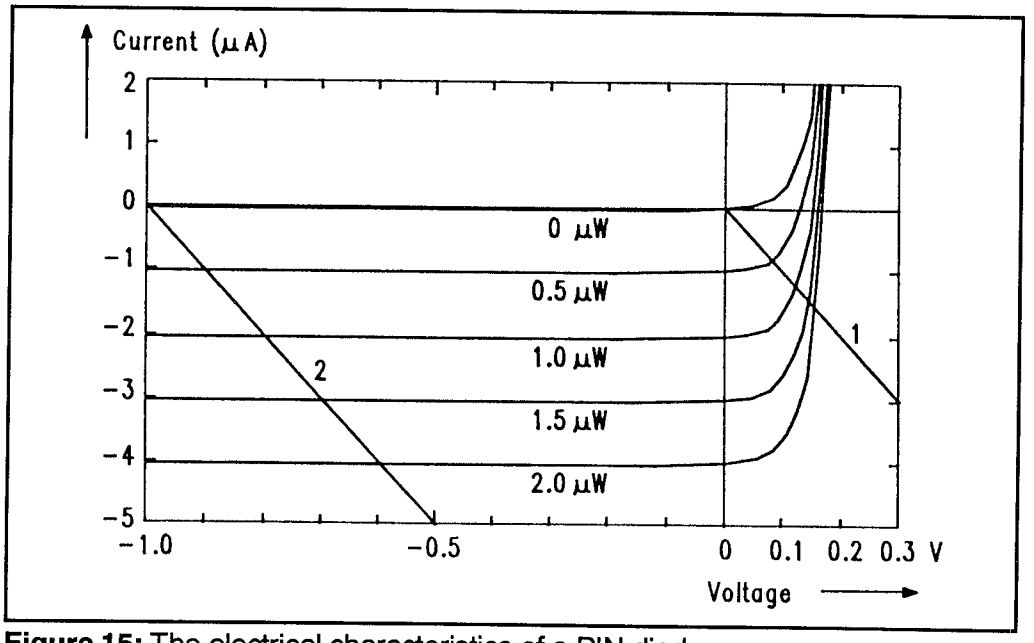

Figure 15: The electrical characteristics of a PIN diode

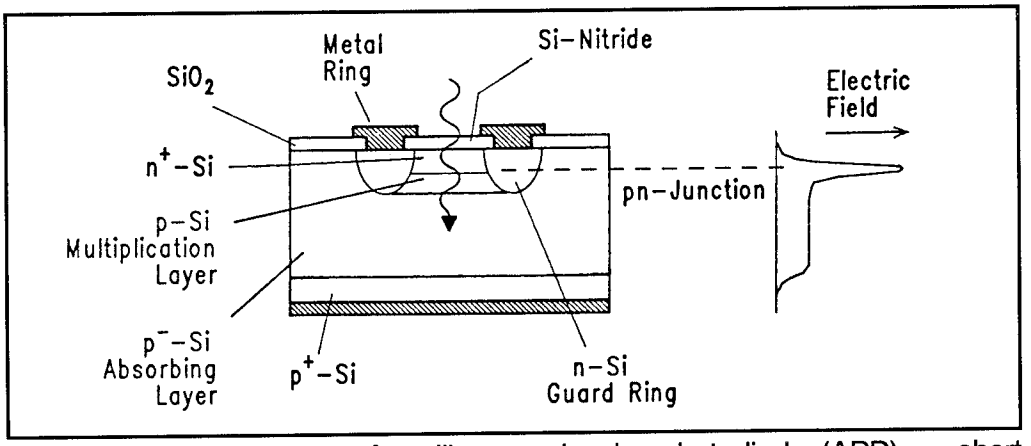

Figure 16: The structure of a silicon avalanche photodiode (APD) — short wavelength

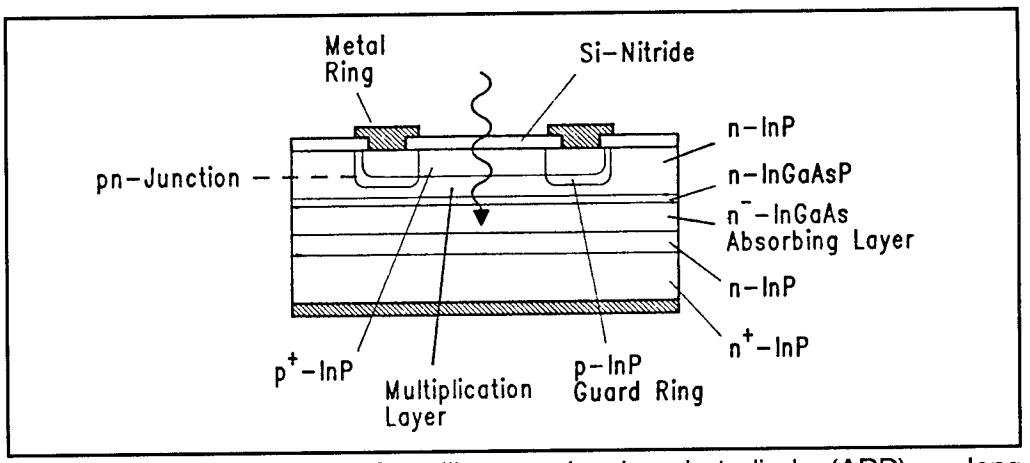

Figure 17: The structure of a silicon avalanche photodiode (APD) — long wavelength

source with a well defined long bit sequence (pseudo random bit sequence or PRBS) and comparing the received sequence with the transmitted one (see Figure 20).

More detailed measurements are made during the design and installation of the system. The *sensitivity* is the lowest power level that leads to the desired BER. It can also be tested with a BER tester. Here, an optical attenuator (see Figure 21) reduces the transmitted power level until the error rate exceeds the predefined

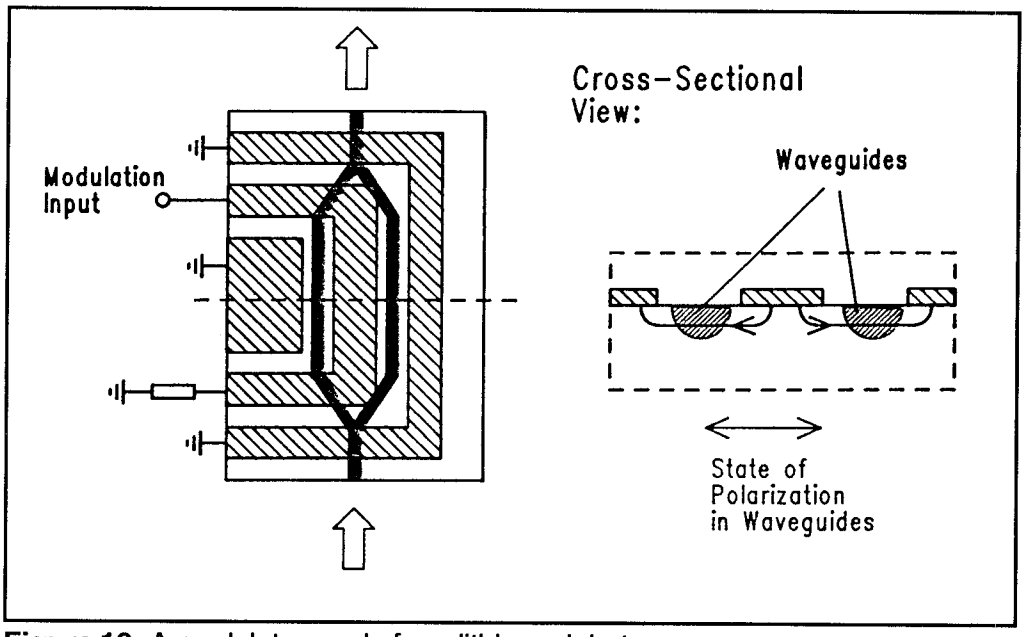

Figure 18: A modulator made from lithium-niobate

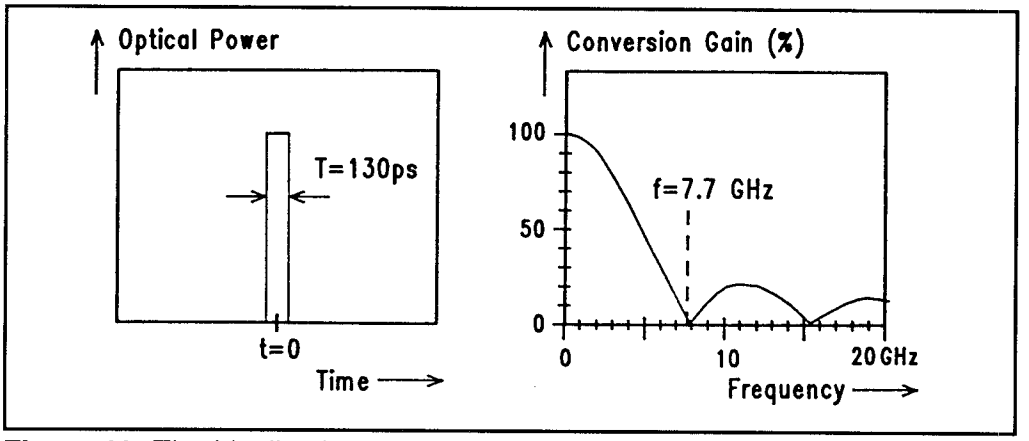

Figure 19: The idealized response times and frequencies of the modulator of Figure 18

value. Even more specific is the measurement of the *eye diagram* (see Figure 22). To do this, you modulate the transmitter with a PRBS sequence and the received analog signal is displayed on a storage type oscilloscope. The system's clock triggers the oscilloscope. Many different bit traces appear on the scope's screen.

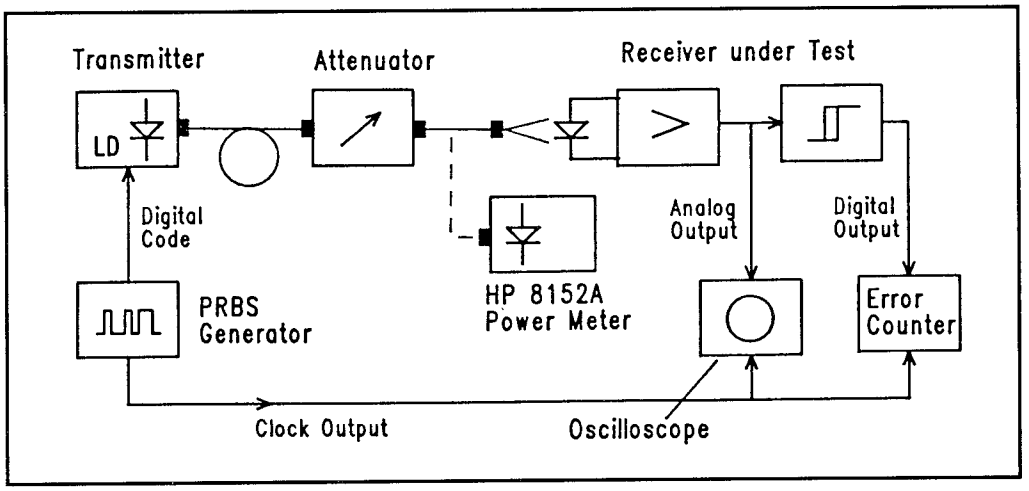

Figure 20: A test setup for making bit error rate tests

This gives you an approximate quantization of the *jitter*, the *signal-to-noise ratio*, and the *intersymbol interference*.

Fiber Optic Troubleshooting

Your voltmeter no longer works. You open the cover and begin to troubleshoot. You trace the fault to some components with a plastic cable. What is this? What do you do?

You have found a fiber optic link that has special parameters and requires special test equipment. We'll cover these parameters, equipment, and the basics of fiber optic troubleshooting, with tips and examples in the following material.

Background

Fiber optic applications include isolation, LANs (Local Area Networks), and video, audio, or digital data transmission. The consumer electronics industry uses fiber optics to isolate digital (TTL) from low level analog circuits. For example, an Onkyo Compact Disc (CD) player uses fiber optics in this application. CD players and the new DAT (digital audio tape) both use this technology for high noise immunity. Look for modern stereo systems from Japan to soon interconnect the CD player or DAT to any other component with plastic fiber optics. A new ANSI standard is being developed for FDDI (fiber distributed data interface), which is a 100 Mbit/sec optical LAN.

In consumer electronics fiber optics is proliferating. A good example of a test

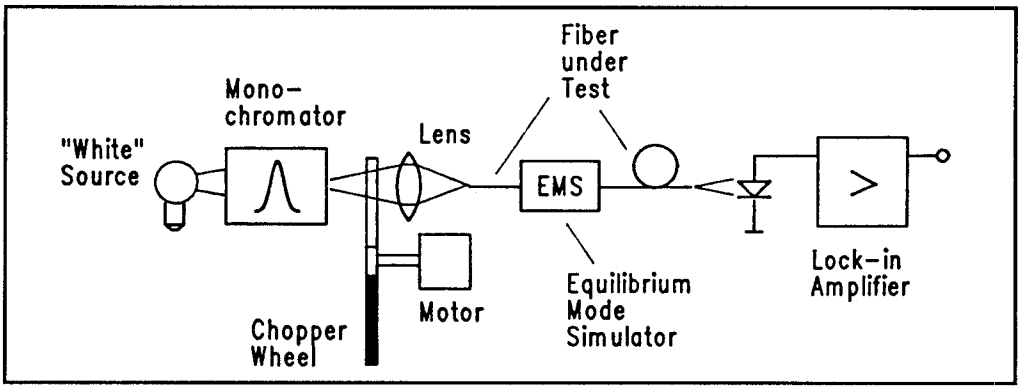

Figure 21: A test setup for making spectra attenuation tests

instrument related fiber optic application is the HP 3458A multimeter, where fiber optics provide a data link for high voltage isolation between floating measurement hardware and the GPIB section. Traditionally, pulse transformers have been used in this area.

Other applications also include RS-232C (serial interface connection) modules, such as the DOC102P and DOC101P, which can be used for higher noise rejection over long distances. Note that a standard hardwire RS-232C connection is limited to approximately 50' according to EIA (Electronic Industries Association) specifications. The DOC102P and DOC101P are good to approximately 500 m. Hewlett Packard's new Precision Architecture computer uses an optional fiber optic interface for the connection between the disk drive and the CPU. The HP 37204A Multipoint HPIB Extender also uses an optional fiber optic interface. Fiber optics play a big part in isolating the effects of TTL noise from small signal analog electronics.

Fiber Optic Link

Fiber optic links, as they are referred to, are made up of three functional blocks. The transmitter is the first block, containing an LED and any support circuitry. The second block is the cable and correct connectors for the link, which carries the light signal from the transmitter to the receiver. The receiver is the third block. It consists of a photodiode/phototransistor and support circuitry to convert the light back to an electrical signal.

Test Equipment

Troubleshooting fiber optic circuits requires specialized test equipment. This equipment allows you to verify the light output of the transmitter, view the waveshape of the optical output, accurately vary the light amplitude (useful in troubleshooting the receiver), and to substitute your own optical signal.

For example, an optical power meter measures light output power (P_t or P_r). an optical receiver, such as the HP 81519A gives you the ability to check correct optical modulation. Other equipment that may prove helpful include an optical attenuator, an optical source, and a good dual trace oscilloscope and digital voltmeter.

Basic Troubleshooting Procedure

One important resource for troubleshooting is the data book from the manufacturer on the specific parts used. Databooks are inexpensive (less than $15 or sometimes free) and provide a wealth of useful data. For troubleshooting purposes you only need to look at typical values of the following:

- V_F (forward voltage measured across the LED)
- t_r, t_f (for both parts)
- P_t (for specific current)
- I_F (usually in graphical form)
- Sensitivity of the receiver
- Attenuation of the fiber optic cable

Troubleshooting fiber optic circuits requires a logical, organized approach, just

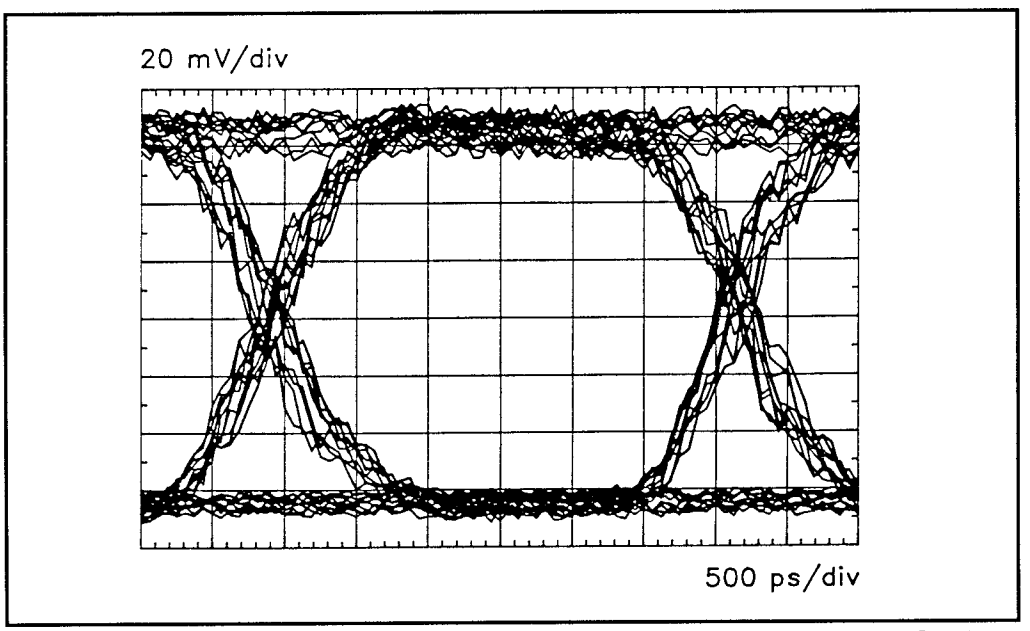

Figure 22: A typical eye pattern as shown on a digital storage scope's CRT

like troubleshooting other circuits or instruments. (But be careful. Even though the approach is similar to many other circuits, don't ignore the special safety precautions associated with fiber optics. Remember a fiber optic circuit may indicate the presence of a high voltage.) The following steps show the order of the procedure we will use to determine the failure:

1. First localize the problem. (Is it located in the fiber optic portion of the instrument?)
2. Gather information about the problem without disturbing the circuit or instrument. This is sometimes referred to as "milking the front panel."
3. Using the test equipment mentioned, isolate the problem to one of the functional blocks of the fiber optic circuit (transmitter, cable, or receiver).
4. Determine what is wrong with the defective block.

Troubleshooting the Transmitter

Troubleshooting the transmitter can be divided into three parts: checking for signals to the transmitter, checking the optical waveform, and checking the optical power.

Checking Signals to the Transmitter

To check for signals to the transmitter, probe the anode of the LED with an oscilloscope. Does a signal exist at this point? Depending on the support circuitry, a current source might be driving the LED. In this case, the voltage excursion (if it is measurable) will be very small, on the order of 50 mVAC, which will ride on a V_F of 1 to 2 VDC. If the LED is driven by a TTL gate (see Figure 23a) or other voltage source, the AC excursion will range between ground and V_F (1.5 V), or between V_{CC} and V_F, depending on the drive circuit used. For example, a pre-bias circuit (see Figure 23b) can affect the voltage swings in a different manner. Pay attention to the DC voltage across the LED as the diode must have a high enough V_F to forward bias the LED, approximately 0.2 V (a high V_F or supply voltage at the anode with the cathode near ground would indicate an open LED). At this point, any incorrect measurements other than those listed would indicate the drive circuitry.

Check the Optical Power

Before checking the optical power, remember to observe the safety precautions for the transmitter—separate it from the rest of the circuit. To check it for correct operation, first remove the fiber optic cable from the transmitter receptacle. To check the light output, a meter should be used that is calibrated for the wavelength of the LED (HP 8152A or equivalent). Replace the original fiber optic cable with a short, known good cable approximately one meter in length. Make sure the test cable has the correct connectors for the transmitter being

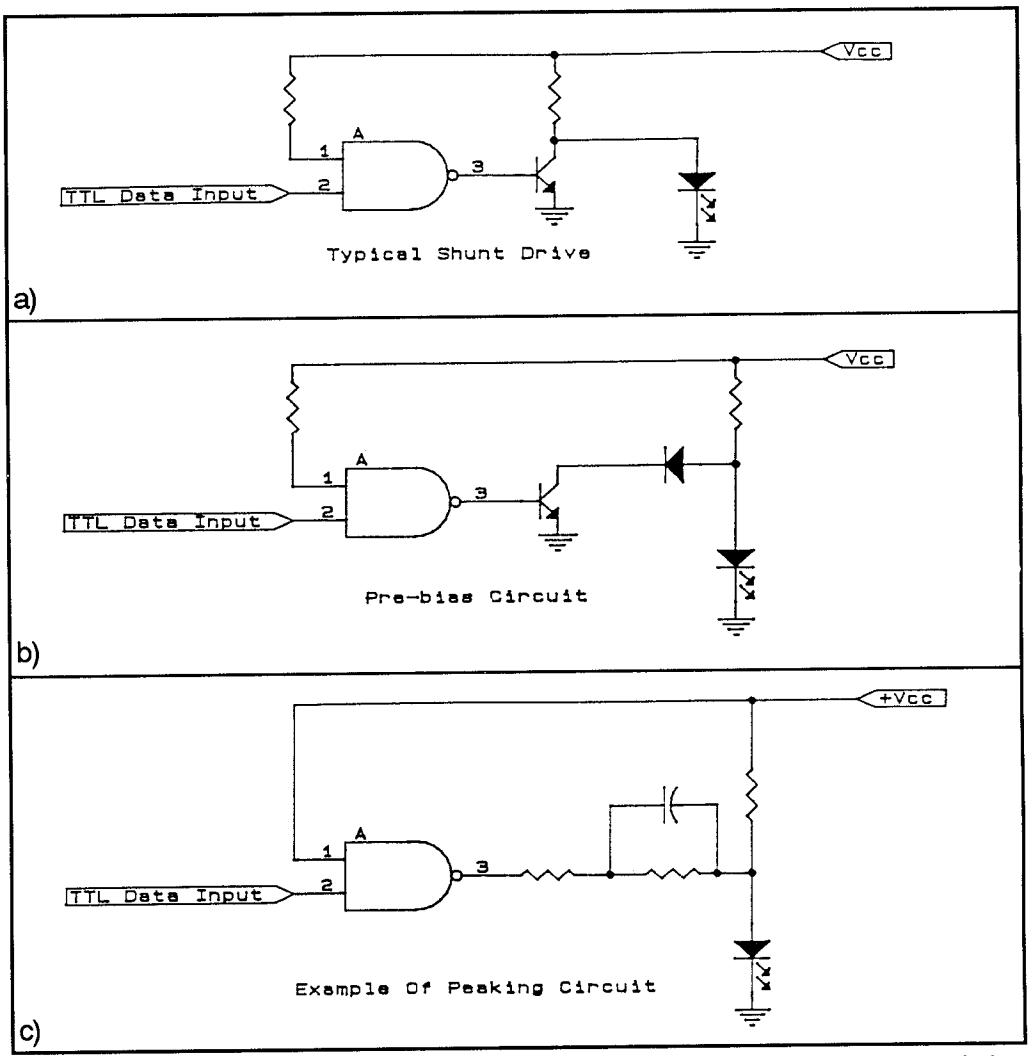

Figure 23: a) A typical shunt drive circuit; b) a typical pre-bias circuit; and c) a peaking circuit

tested. Verify an output. Then measure and record the output from the transmitter for later use during the cable test. If there is no output, the failure has been isolated to this functional block. To verify the LED output, measure the voltage loop containing the LED (see Figure 23c), then calculate the current through the LED (I_F) and check this value with the I_F vs. P_t on the graph in Figure 24.

Checking the Optical Waveform

Next, check the optical waveform with a waveform analyzer. Use the HP 81519A Optical Receiver or equivalent and an oscilloscope (see Figure 25). While

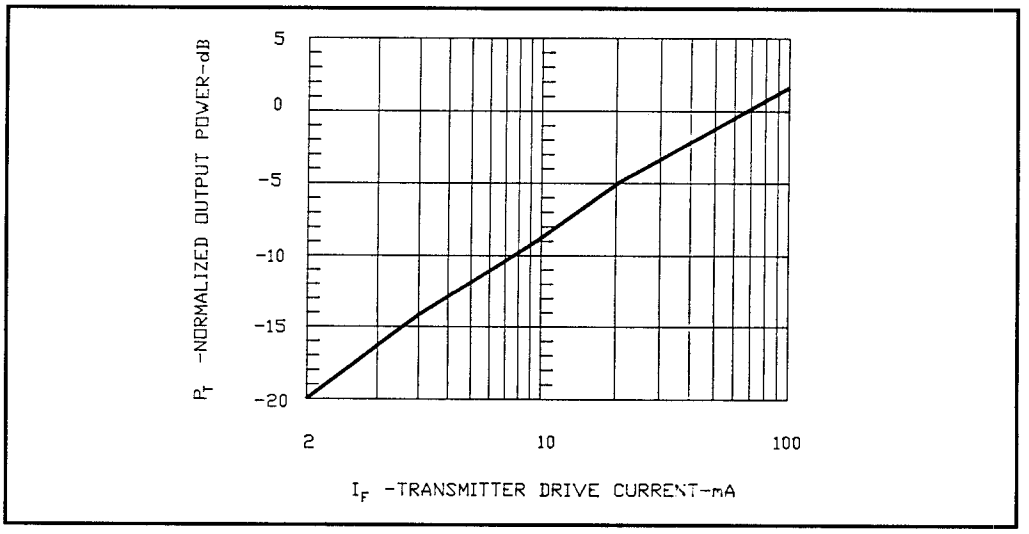

Figure 24: A typical Output Power vs. Drive Current plot

attaching the optical receiver, verify that the oscilloscope termination matches the analyzer requirements (usually 50 Ω). If possible, use a dual-trace scope and trigger on the input signal. Compare the input signal to the output signal. The signal from the optical receiver should match the signal seen across the LED. Figure 26 is an example of a good waveform. It will not be an exact duplicate because of slow responses in the LED.

In particular, pay attention to the rise/fall times of the transmitter. A long fall time (sometimes called a "long tail effect") can cause problems (see Figure 27). A long tail response can be recognized by the characteristic changing slope in the fall time. At approximately the 20% point on the fall time line, the slope changes to a more gradual sloped line. Usually the rise time on a long tail LED will also be slow, but slow rises are usually fixed by the designer using a peaking circuit (again, see Figure 23c). A peaking circuit can be recognized where the output of the drive circuit is connected in series with two resistors, one of the resistors being bypassed with a capacitor. When the first edge occurs there will be a surge of current causing a fast turn on of the LED. Unfortunately, this does not help the falling edge.

Depending on the receiver, if the long tail response occurs near the threshold of the amplifier/comparator, noise (which rides on the signal) will again pass through the threshold. This will cause jitter or multiple switchings on the receiver output.

The Cable

Testing the cable consists of comparing the optical output from the transmitter using a short and known good cable to the output of the original cable at the receiver. Using the one meter long known good cable, measure the optical output at the transmitter (as was done earlier when you checked the optical power). Reconnect the original cable to the transmitter and then move to the receiver and measure the power.

The power from the cable at this point should be sufficient to ensure correct operation of the receiver; that is, the power should be above the sensitivity level as listed in the data sheet. If the power out of the cable is below the minimum sensitivity level of the receiver, and the optical output for the transmitter is correct, then either the cable has high attenuation or is broken.

If the cable has high attenuation, first try cleaning the ends of the cable with alcohol. If this does not fix the problem, use the following technique only if the cable is glass and less than 1 km in length, or plastic and less than 200 m in length. Cables exceeding these lengths will have to be tested using another technique. Remove the cable and hold one end of the cable up to a light source. A 100 W incandescent light works well. (A long cable will have an interesting effect. The light exiting the fiber will be red for glass and green for plastic.) Note: Be careful not to excessively heat the connector with the light source.

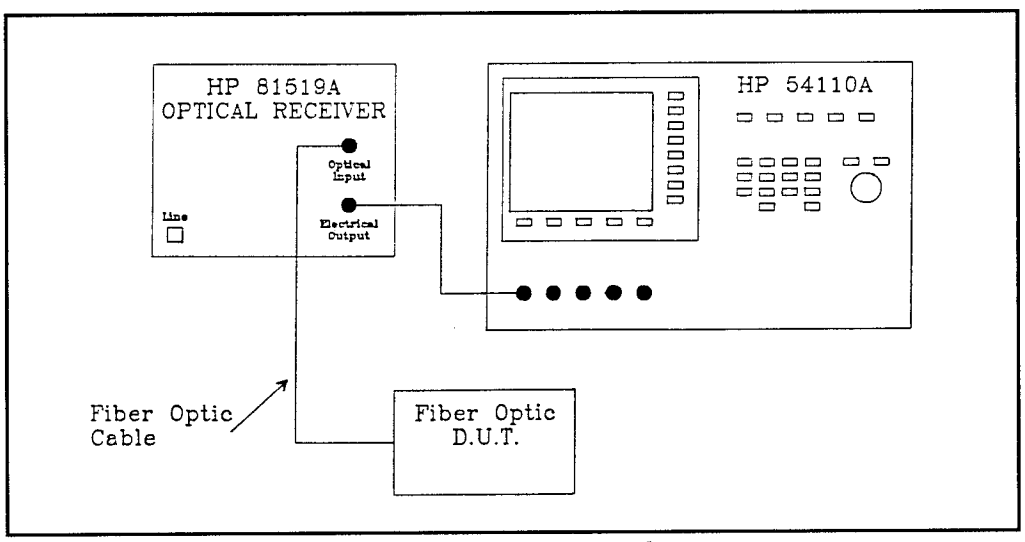

Figure 25: The test setup for making optical waveform tests

Inspect the ends of the fiber for dark spots, chips or scratches. Magnification of at least 50x will be required because of the small fiber diameter (about 50-100 microns), which cannot be easily viewed with the naked eye. (Plastic fiber is the exception as it is about 1 mm in diameter.) Remember, do *not* use the transmitter as the light source for inspecting the fiber. If small scratches exist, it is possible to remove them with polishing. Be careful not to excessively polish the connectors as this increases the distance separating the cable from the lens or IC, which increases the optical power losses at the connection. Use the correct polishing equipment for the connector installed on the cable. Any attempt to polish the cable without the fixture, which maintains the cable and connector perpendicular to the polishing paper increases the loss. Make sure the cable is clean since polishing is a last resort before installing a new connector. If either

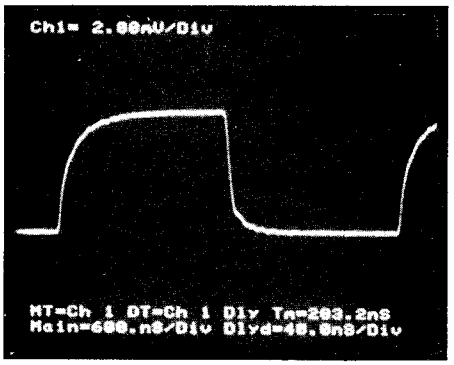

Figure 26: An example of a good optical waveform with a clean fall time

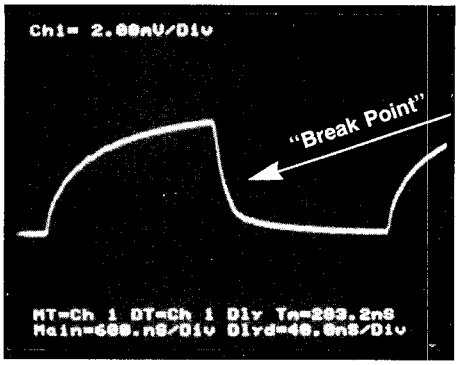

Figure 27: Poor optical waveform with a slow fall time, commonly called "a long tail effect"

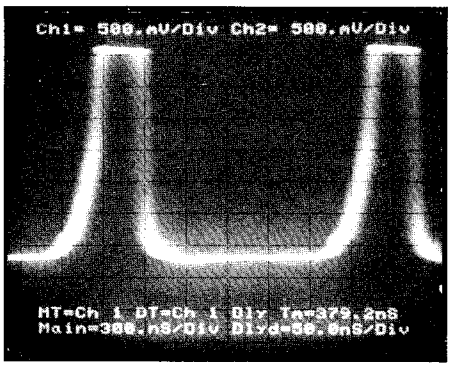

Figure 28: Severe pulse-width distortion caused by underdrive

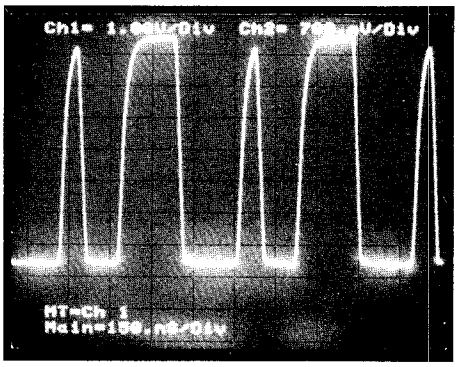

Figure 29: Double pulses caused by overdrive

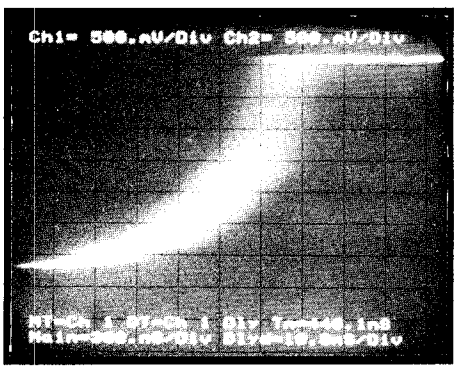

Figure 30: A pulse width with excessive jitter caused by underdrive

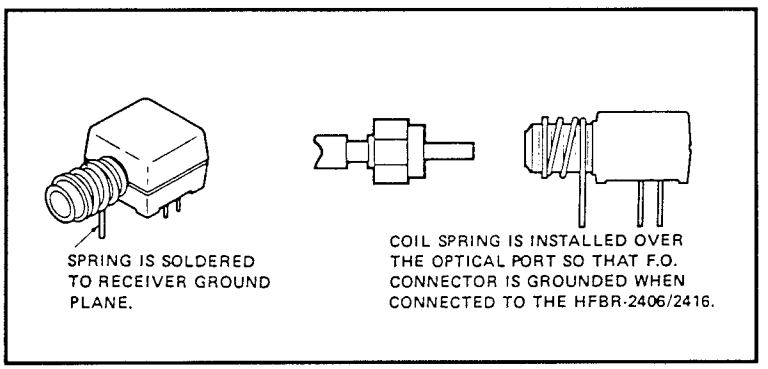

Figure 31: A spring used on a cable's metal ferrule to act as a ground plane

of the ends are damaged beyond cleaning or polishing, cut off the damaged end and install a new connector.

The Receiver

If the transmitter and the cable test good, move to the receiver side of the link. First, identify the type of receiver. If the receiver is a PIN photodiode, you may see a voltage of 200 mV, or a current of 100 to 400 nA or less, depending on the support circuitry. If the part is TTL, expect typical TTL levels. Note that some TTL (the open collector types) require an external pull up resistor. Check the output. Is a signal present? Is the signal badly distorted? Does the part oscillate or ring? Are there extra or doubled pulses? Is there a spike on the output? Is there jitter on the edges? Are mysterious half or partial pulses at half amplitude present? All these symptoms hint at where the problem lies.

Figure 28 shows the output distortion, which can come from several areas. Overdrive, underdrive, receiver photodiode failure, support circuitry, and LED long tail effects are some of the culprits. Underdrive caused this waveform.

Some of the same problems that caused a distorted output can cause extra or doubled pulses, as shown in Figure 29. Overdrive, LED long tail effects, and a faulty receiver can cause this problem. In this example, overdrive is the problem.

Edges with excessive jitter (see Figure 30) can be hard problems to solve since the cause can be one or a combination of defects. The most obvious cause would be insufficient optical power. After that it could be a bad receiver, open bypass capacitor overdrive, long-tail effects, or any part of the power supply filter. The

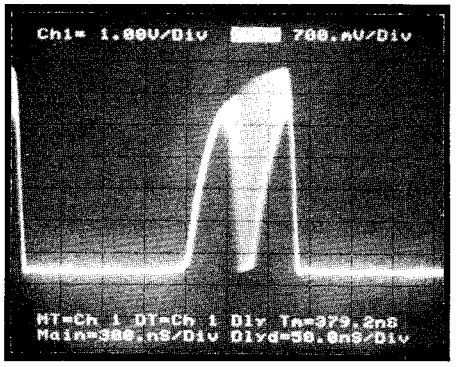

Figure 32: This partial pulse was caused by overdrive

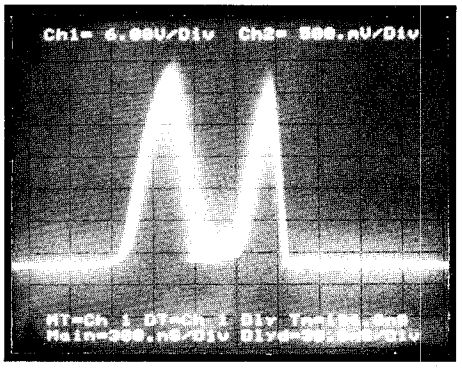

Figure 33: This one was caused by a missing bypass capacitor

problem could be noise-related where the metal ferrule of the fiber-optic connector acts as an EMI source by inducing electrical noise into the receiver.

If the environment in which the fiber-optic link is used is extremely noisy and a metal ferrule is used, it is recommended that a metal spring contact be used as a ground plane (see Figure 31). If this spring is missing or has a poor connection, oscillations can occur that may not be readily visible on an oscilloscope. The symptoms may include ringing, overshoot, or decreased sensitivity. Install a spring if it is missing, or clean the surface between the connector, metal ferrule, and spring, or resolder the spring to the printed circuit ground plane.

Another method that reduces the effects of EMI pickup by the fiber-optic connector is to use a connector with a non-conductive plastic or ceramic ferrule. Note that some receivers incorporate a shield into the case or housing of the component, so it is important on these receivers that the case is grounded. The example of jitter shown in the figure was caused by underdrive, which could result from either a contaminated fiber cable or a weak LED.

Partial pulses (see Figures 32 and 33) are a classic symptom of a long tail effect, although an open bypass capacitor or overdrive may cause a similar effect. The problem shown in Figure 32 was caused by overdrive. Figure 33 was caused by a missing bypass capacitor.

We have now shown you how to check all parts of the fiber optic link: the transmitter, the cable, and the receiver. Following these steps of fiber optic troubleshooting should isolate the problem for you whether it is in the circuit or the cable. — *Vaughn D. Martin*

4/3 - MFC
Microwave Frequency Counters

A microwave frequency counter is an instrument that quantitatively measures and characterizes microwave frequencies. Many applications exist in this frequency spectrum, and a microwave frequency counter is the instrument to use to make measurements pertaining to these applications. The two largest manufacturers of commercially available microwave frequency counters are Hewlett-Packard (HP) and EIP Microwave. We will examine representative instruments from both manufacturers.

Frequency counters are basic test tools for measuring signal frequencies. Counters are able to verify frequency accuracy of transmitters, FCC channels, oscillators, signal sources, transponders, the linearity and transfer function measurements of voltage controlled oscillators, pulse width and pulse period measurements. Basic low frequency universal counters consist of direct frequency counters and reciprocal frequency counters.

Direct Frequency Counters

Direct frequency measurements are made by comparing an unknown signal to a reference frequency, namely the time base (see Figure 1). The input signal is first conditioned to a series of pulses before passing to the main gate. The frequency is measured by generating a time interval (gate time), consisting of a number of cycles of the reference clock, during which the input signal is counted.

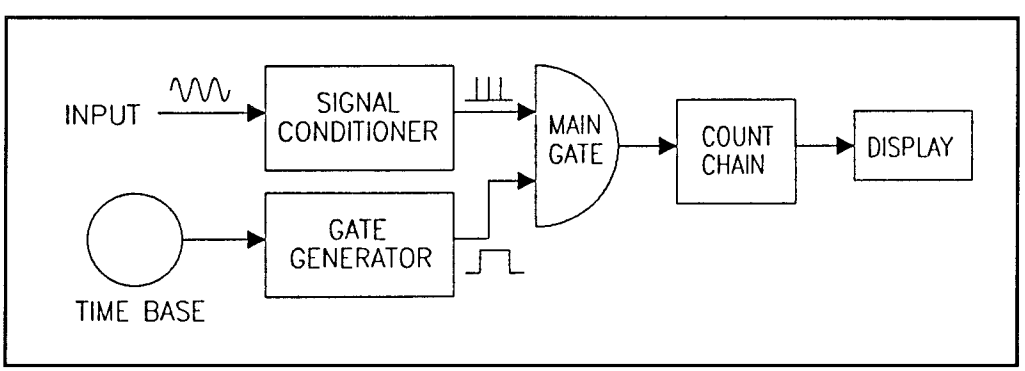

Figure 1: Direct frequency counter

The frequency is calculated by dividing the number of cycles by the gate time. Note that the required gate time is the inverse of the desired resolution, that is, the gate must be open for one cycle of the least-significant-digit frequency. For example, if a resolution of 1 kHz is desired, the required gate time is 1 msec. This basic, direct frequency counter, is the heart of most microwave frequency counters.

Reciprocal Frequency Counters

Reciprocal counters measure period, the reciprocal of frequency. As in the direct frequency counter, the input signal is conditioned before passing to the main gate (see Figure 2). The period is measured by counting reference clock cycles for a specified number of cycles of the input signal. The period is calculated by dividing the total amount of clock time by the number of cycles of the input signal.

The advantage of a reciprocal counter is that it provides higher resolution measurements of low frequency signals faster than a direct frequency counter. For example, if a 100 Hz signal is being measured over a 1 second gate time, 100 zero-crossings (rising edge) will be counted. The resolution is one zero-crossing, or 1 Hz.

A period measurement, on the other hand, using a reciprocal counter with a 10 MHz time base, will count 100,000 zero-crossings (rising edge) during a single 0.01 second period. The resolution in this case is also one zero-crossing (rising edge, that is, one cycle of the time base), or 1/10 MHz, which is equal to 0.0000001 s. Thus the resolution of the reciprocal counter is:

$$(1/0.01 \text{ s}) - (1/0.0100001 \text{ s}) = 0.001 \text{ Hz}$$

or 1000 times better than the direct frequency counter. The resolution advantage reverses, however, when the signal frequency is higher than the clock frequency (typically 10 MHz). Here the direct frequency counter will yield better resolution. In fact, a reciprocal frequency counter cannot operate beyond its time base frequency unless the counter has the ability to leave its gate open for more than one cycle of the incoming signal.

Universal Frequency Counters

Universal counters can count time intervals in addition to frequency and period, and typically operate to frequencies as high as several hundred MHz. Figure 3

Section 4
Tools and Test Equipment

Table of Contents

4/1 *Tools for Repair*

4/2 *Basic Test Equipment*

4/3 *Advanced Test Equipment*

4/3 - DMM *Digital Multimeter*
4/3 - F *Frequency Counter*
4/3 - O *Oscilloscope*
4/3 - TEP *Test Equipment Probes*

Table of Contents

4/1
Tools for Repair

Introduction

Before you select your tool kit, it will help if you know which branch of electronics interests you most. For example, if you intend to work with large power mains, large cutters would be required. Those same cutters are useless if you work with small wires.

The range of possible fields is almost endless and continues to grow. The variety of tools and equipment needed grows with it. Suppose you decide to work with television sets. In the past you could get by with some basic equipment and perhaps a tube tester. Today you would need transistor testers, IC checkers, a logic probe and much more. If you choose to go into satellite television, fiber optics or radar you will be dealing with a different range of frequencies, which means that different equipment will be needed. Fortunately you don't have to make all of the decisions right now—nor do you have to invest in the complete tool kit all at once. You can build and add to it over time, buying more tools when necessary.

The test equipment is covered in Sections *"4/2 Basic Test Equipment"* and *"4/3 Advanced Test Equipment"*. The special test equipment needed is covered in the appropriate troubleshooting and repair sections. The basic tool kit is covered here.

The real key is to purchase the best you can afford. "Cheap" tools might work, but not as well. Not only will they have a shorter life span, they can actually cause damage to equipment. In many cases, they might have less expensive (and less sturdy) metal, covered with a thin layer of chrome. The metal beneath can bend or break if too much force is applied. Also, the shiny coating can flake off. If this gets inside a device many problems can occur. Another critical factor is to be sure that the handles are insulated when appropriate.

Wire Cutters

One of the basic tools is the wire cutter. This tool falls into one of three main categories, depending mostly on the size of the wire being cut.

Side Cutter

The smallest is meant to handle component leads and other small wires such as those used for wire-wrapping. Most often these are side cutters, as seen in Figure 1.

Oblique-, End-Cutter

The oblique-, end-cutter, (Figure 2) is used to clip component leads and tails from the back of a PC board. Although it is not an essential tool (many technicians use the standard end cutter), it is useful to have.

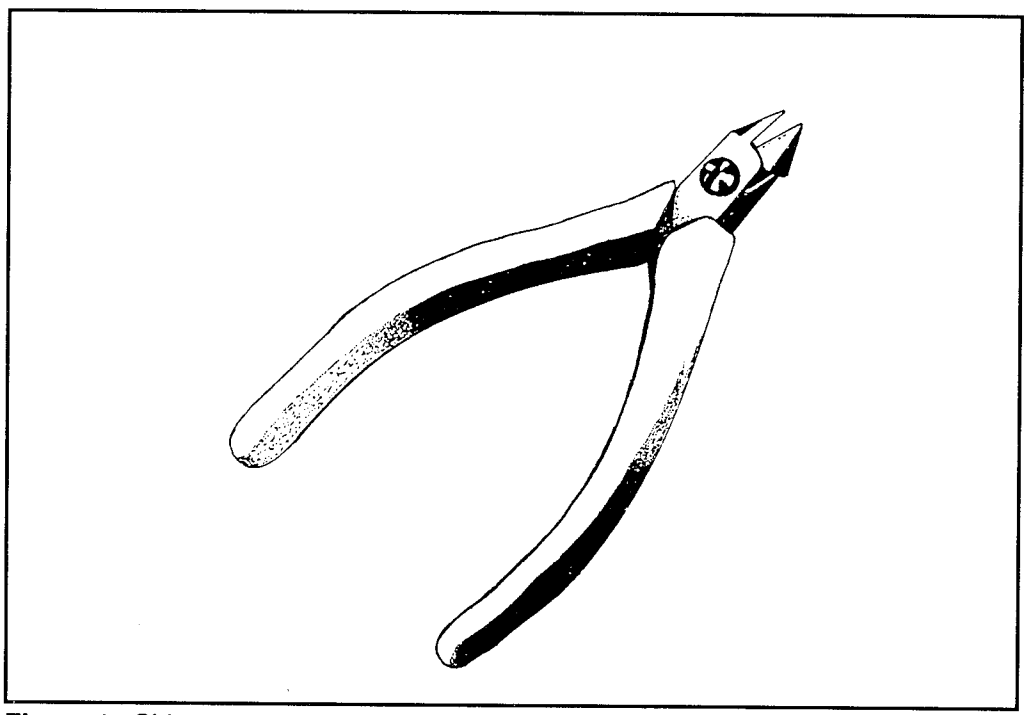

Figure 1: Side cutters for component leads and small wires

Multiwire Cutter

The third type of wire cutter cuts larger cables, including mains, multiwire and other cable assemblies that are physically larger. The exact size and type needed depends mostly on what is being cut.

Other kinds of cutters and nibblers may also be needed. A ribbon cable cutter, for example, is designed to cut small wires which are spread out laterally. Shears might be needed to cut sheet metal.

Nibblers can do a similar job when you need to cut small portions without bending or kinking the metal. These cutters are added to the tool kit as the need arises.

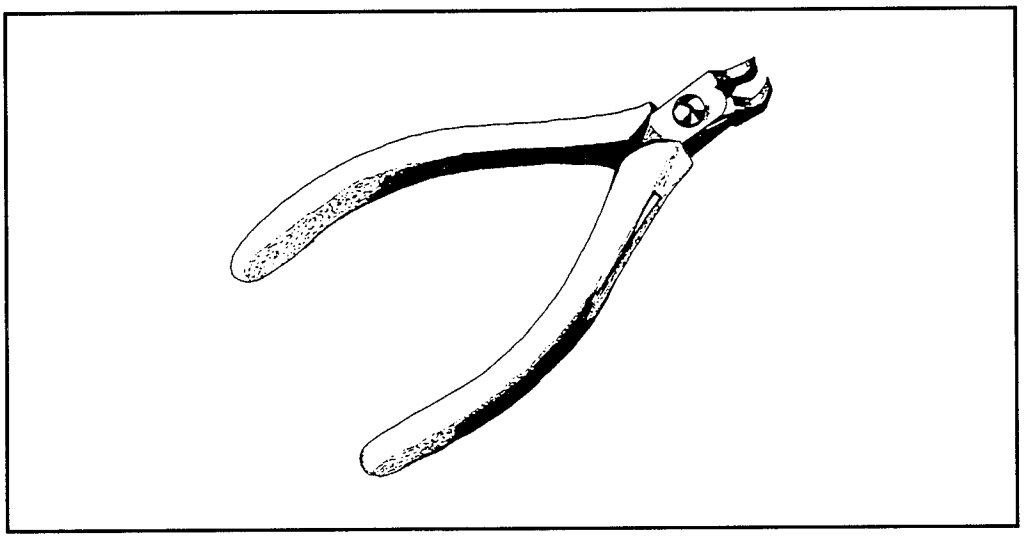

Figure 2: Oblique cutter

Gripping Tools

Pliers

Gripping tools, such as pliers, are extremely useful. They can be used to grip wires, components, screws and just about anything else. Some can also be used to preform component leads prior to insertion and soldering.

Needlenose Pliers

Needlenose pliers (Figure 3) are one of the most versatile in electronics. The long, narrow jaws make it easier to reach into tight quarters, and to grip small parts. The rounded backs of the jaws are often useful for making graceful bends.

The jaws are usually toothed to provide better gripping. Also available are pliers with smooth jaws, and even models that have plasticized jaws, or jaws with plastic sleeves. The latter are used when gripping delicate parts where jaw teeth could cause damage.

Tip ☞

Standard pliers can come in handy now and then. The greatest caution is to be sure that you do not use it in place of a wrench or socket. This is not what the tool was meant to do. Another caution is to avoid those pliers which have bare metal handles. These are fine for general household use but are not suitable for use around anything electrical.

Combination pliers/cutters are also common. Most needlenose pliers, for example, have a wire cutter. The variety is extensive. Your purchase depends on

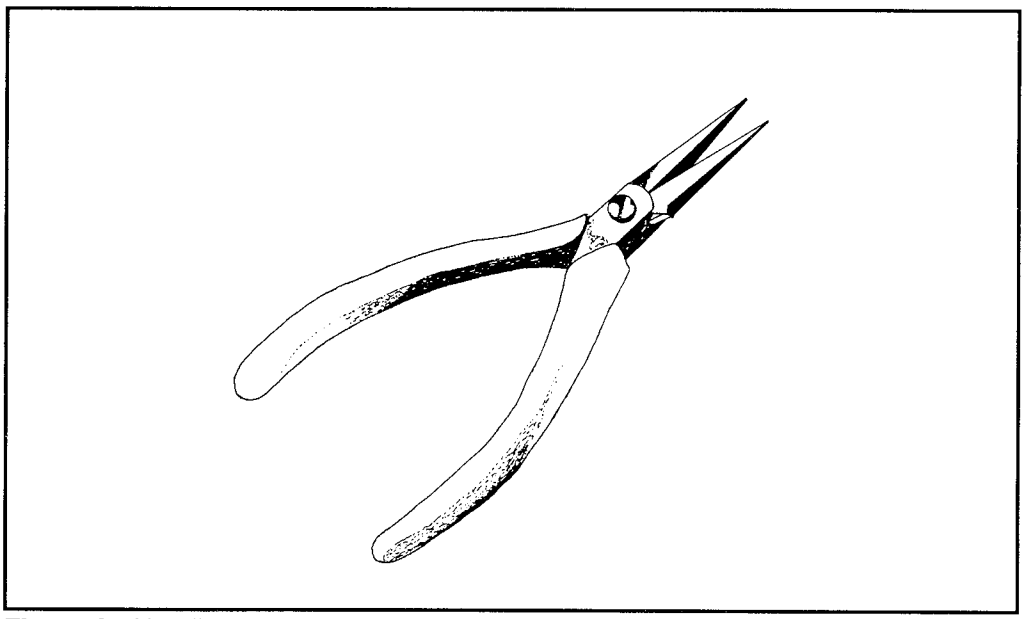

Figure 3: Needlenose pliers

your specific needs. Keep in mind that the cutters on these combination tools are meant for general use. If you need to clip component leads close to a circuit board, use the side cutting tool (as shown in Figure 1).

Other Gripping Tools

Small Gripping Tools

There are many times when needlenose pliers will be too large for the job at hand. You may need to grasp something small, or may need to clip or clamp.

The obvious small gripping tool is a pair of regular tweezers. Keep in mind that the handle is almost invariably metal, which means that this is NOT a suitable gripping tool to use when power is flowing.

Surgical Clamps/ Hemostats

Surgical clamps and hemostats are handy for holding small parts and for use as temporary heat sinks during soldering. These tools come in so handy that you can often find them at electronics supply houses and even at hobby stores.

"Helping Hand"

Another kind of gripping tool is the "helping hand." This tool comes in a variety of configurations. The simplest has alligator clips (for holding wires) on the ends of an arm. Others have clamps designed to hold circuit boards. Still others can be used for different functions, adaptable to the situation.

Wire Stripping Tools

Knife

Many technicians use a sharp knife for wire stripping. While this works—and is sometimes the only solution under the circumstances—it is far better to use a tool meant for the job. There are two main reasons. One is the obvious danger involved, made worse because it's often necessary to use your thumb behind the wire while stripping the insulation with a knife. The other is that it's very easy to cut or nick the conductor. If this happens, the best you can expect is a weak connection.

Tip ☞

For these reasons it's best to use a wire stripping tool. As always the one used must be meant for that particular kind of wire. In essence, the tool will slice through the insulation without touching the conducting wire itself.

Some stripping tools have a number of blades, each with a different sized hole. These tools are sometimes awkward to use but are much more handy than having a drawer full of strippers for every wire size.

Automatic Stripping Tool

A variation of this is the automatic stripping tool. These can be adjusted across a range of cutting depths and widths so that the tool can be used for different wire sizes.

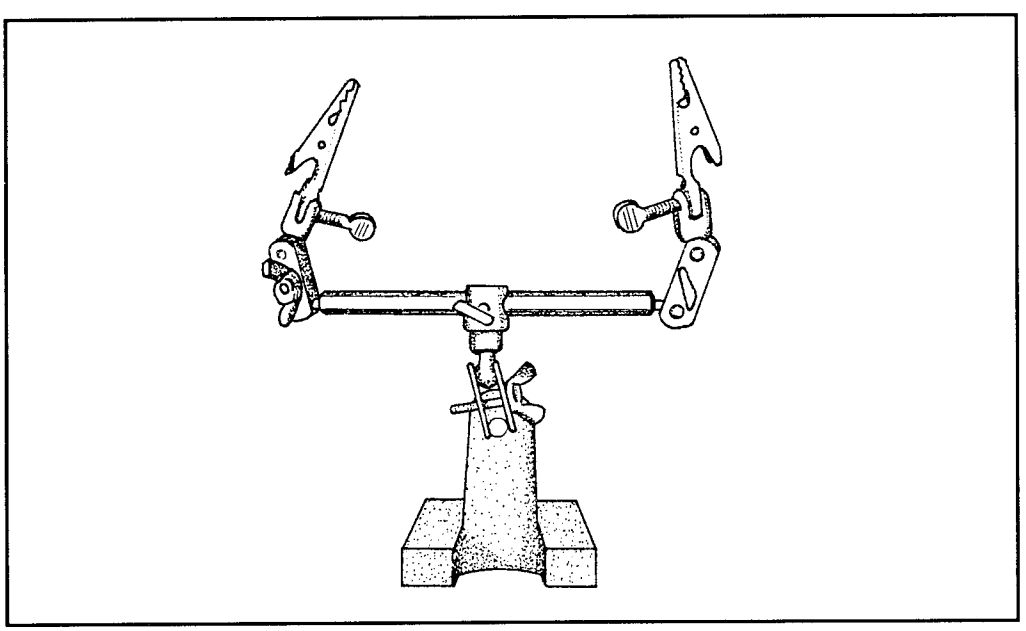

Figure 4: "Helping hand"

Ribbon Cable Strippers

Also available are ribbon cable strippers (which have multiple blades) and cable strippers (which cut through to the center conductor). In each case the tool must match the specific ribbon or cable. You cannot use a stripper meant for R-8 cable on R-59 cable and vice versa.

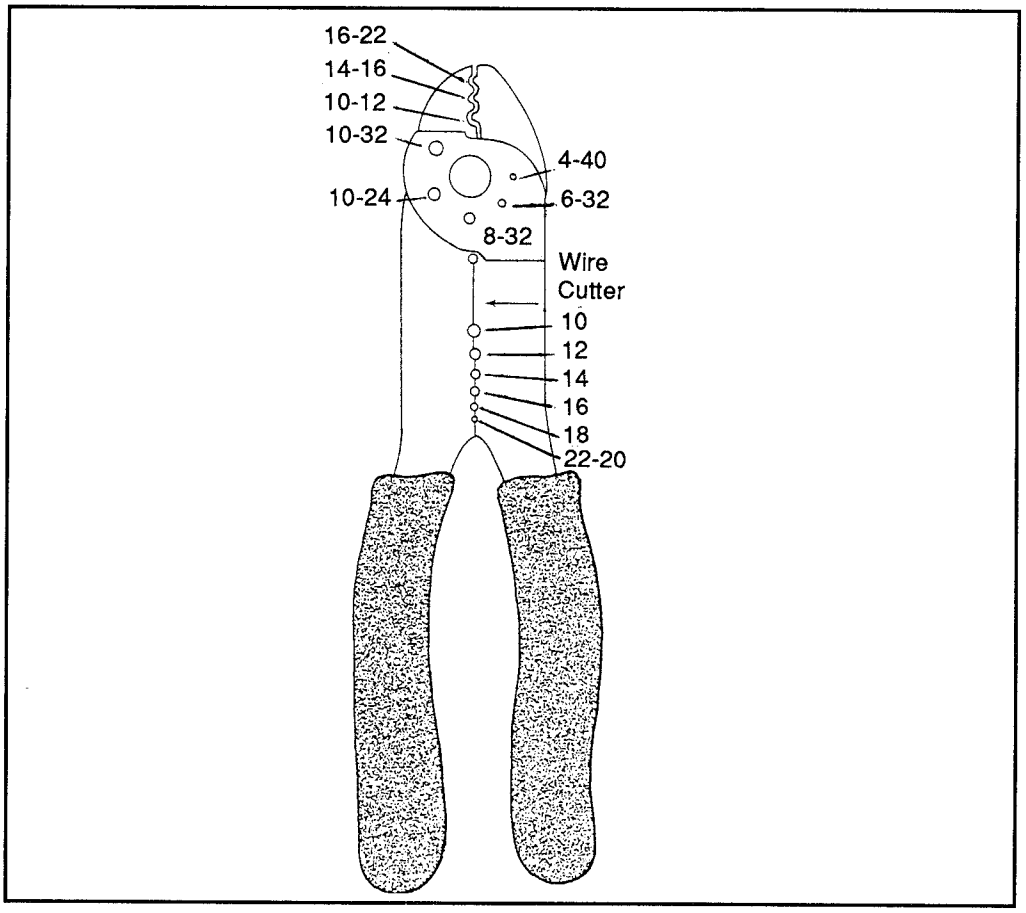

Figure 5: This wire stripper is suitable for removing the insulation from many different wire sizes

Crimping Tools

Basic Types

The three basic types of connection are:

- wire wrap
- soldered terminal
- crimped

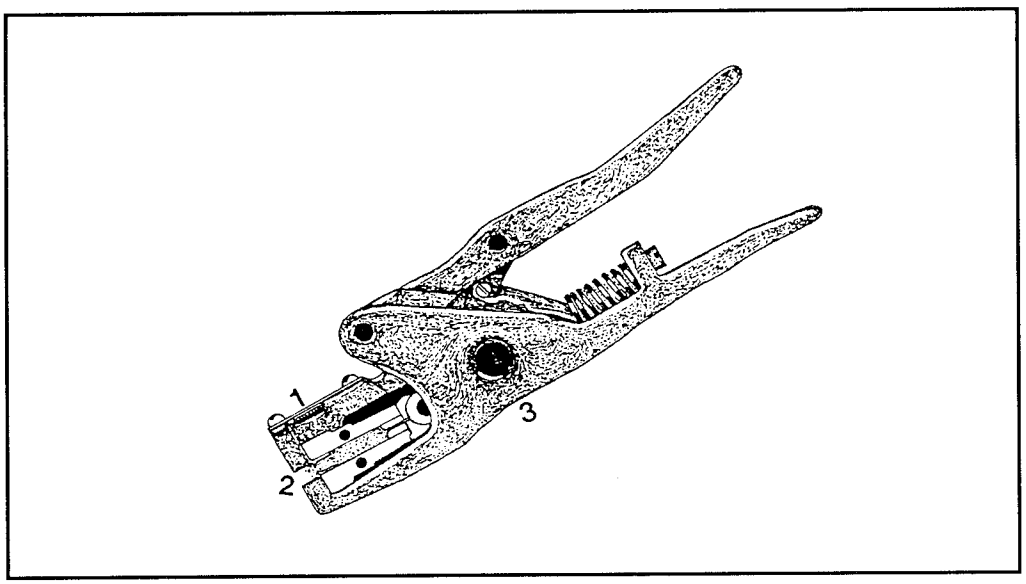

Figure 6: Automatic wire strippers 1)adjustment screw, 2)stripping blade, 3) wire cutter

The wire-wrap technique is used most often to make a connection on a prototype board to test a new or modified electronic circuit. Soldered terminals are common in direct "hard-wired" connections, and are also used to attach many different kinds of connectors to the wire or cable. When done correctly, soldering makes a strong connection, both physically and electrically.

Crimped connections make use of a solderless (or partially solderless) connector. Since there is no solder (or little solder), the strength of the connection is handled physically, either by having the connector clamped directly onto the wire or by using a crimped retaining ring. One of the most common uses of crimps is with the solderless F-type connector on R-59 cable for television hookups.

Tip ☞

Some technicians make the mistake of using the wrong tool for the job. For example, some will use pliers to crush the connector. Although this will often work, it will just as often make an unsightly and even weak connection. Not only do you need to use the right crimping tool, you must use it correctly. In general this means:

- The insulation must be stripped away so that the conductor protrudes just slightly at the end, with the actual length being determined by the type of connector used;
- The conductor is inserted into the connector or receptacle;
- The crimping tool is closed completely to make a secure crimp.

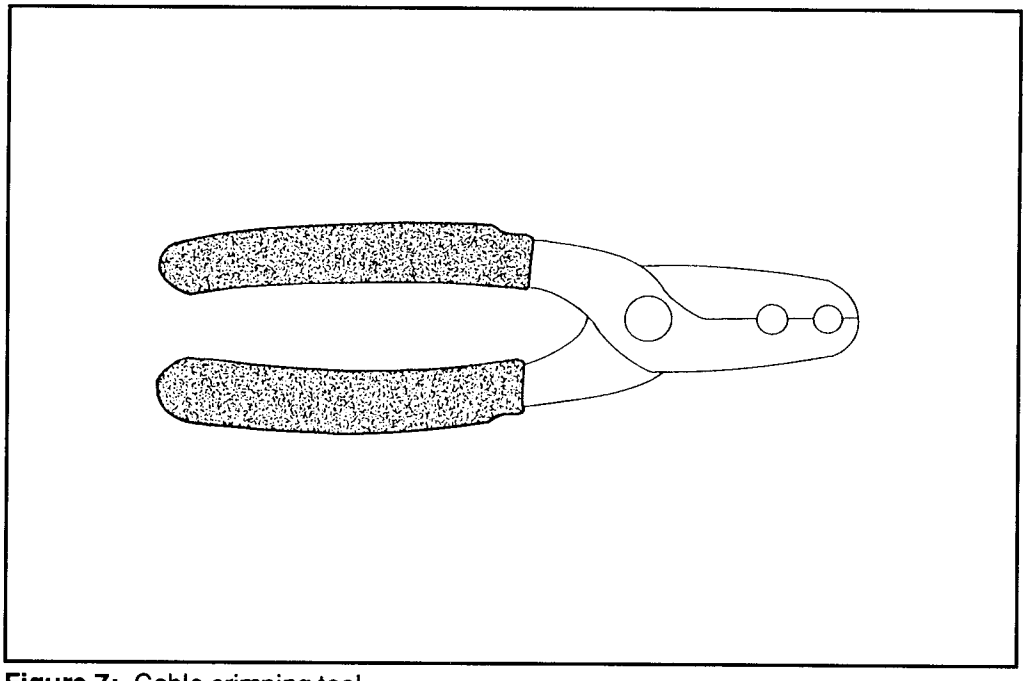

Figure 7: Cable crimping tool

Some of the more expensive tools have features that force you to close the jaws completely, and thus complete the crimping action, before you can open them again. With the more usual type, you'll have to be certain that crimp is complete and secure.

Screwdrivers and Nut Drivers

The range of screwdrivers and nut drivers manufactured today is impressive, and sometimes confusing. Some devices will have standard screws and nuts, others will have metric—a few may even have a mixture of both.

Minimum Equipment

At a bare minimum you should have two blade screwdrivers and two Philips head—a medium and small of each (See Figure 8). Add more later, as the need arises. It is important that the head of the screwdriver fits exactly into the head of the screw. If it doesn't, you risk damaging the screw, the screwdriver, and possibly yourself.

Jeweler's Screwdrivers

As shown in Figure 9, a set of jeweler's (watchmaker's) screwdrivers can also come in handy. Normally these are purchased as a box set, containing 5, 6, or more screwdrivers with heads of different sizes. Often the set will include both the blade and Philips types.

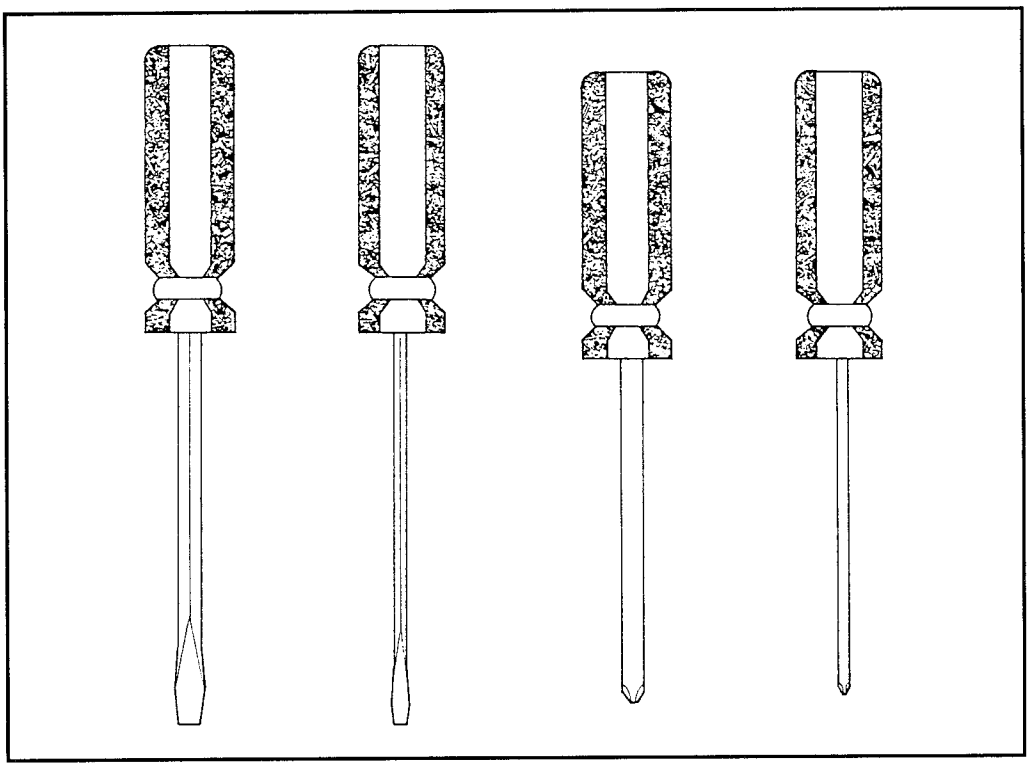

Figure 8: Standard screwdrivers

Regular/Magnetic/ Gripping

Screwdrivers can be regular, magnetic or gripping. The first is for general use. The latter two come in handy when trying to remove or insert a screw in tight quarters. Care must be taken with the magnetic type, however. Although the magnetic field is very small, some components cannot tolerate any magnetism near them.

Torx Head

Occasionally you will come across a different kind of screw head. The Torx head is becoming popular. In theory, the Philips head is less prone to stripping than the slotted type head—and in theory the Torx head is less prone to stripping than the Philips head.

Special Security Head

In addition, you may occasionally find a screw with a special security head. These are designed specifically to keep people (including technicians) out.

Nut Drivers

Nut drivers are like wrench sockets mounted to screwdriver handles. Like regular sockets, the socket-ends of the nut driver come in a variety of sizes, and may be either standard or metric.

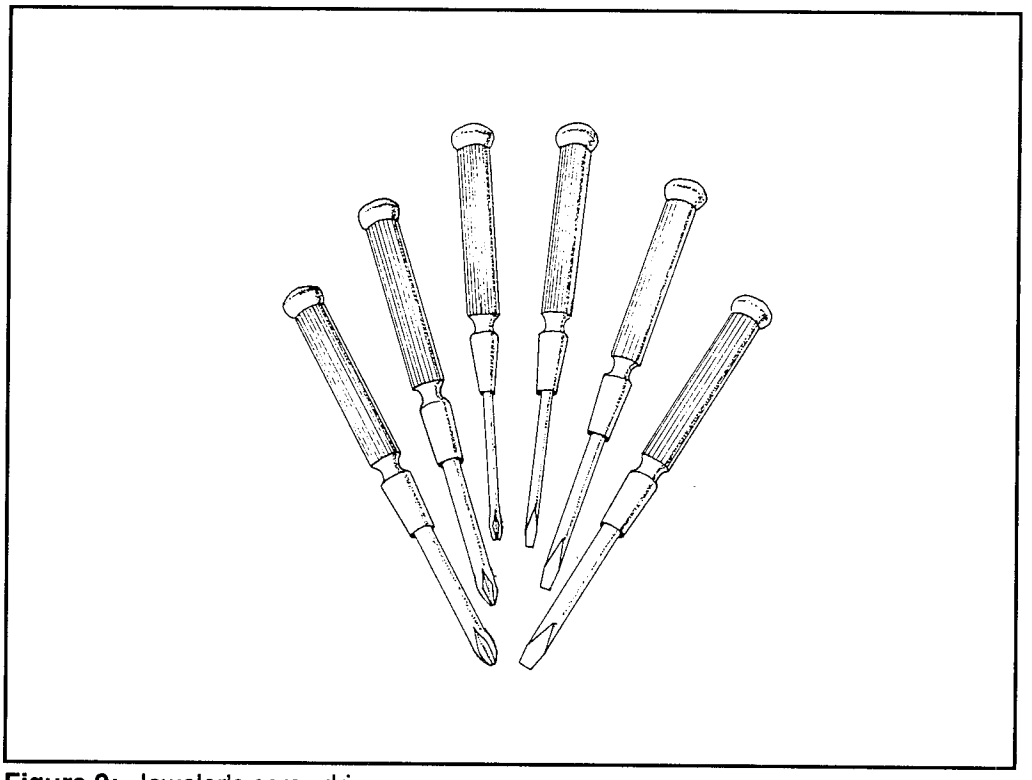

Figure 9: Jeweler's screwdrivers

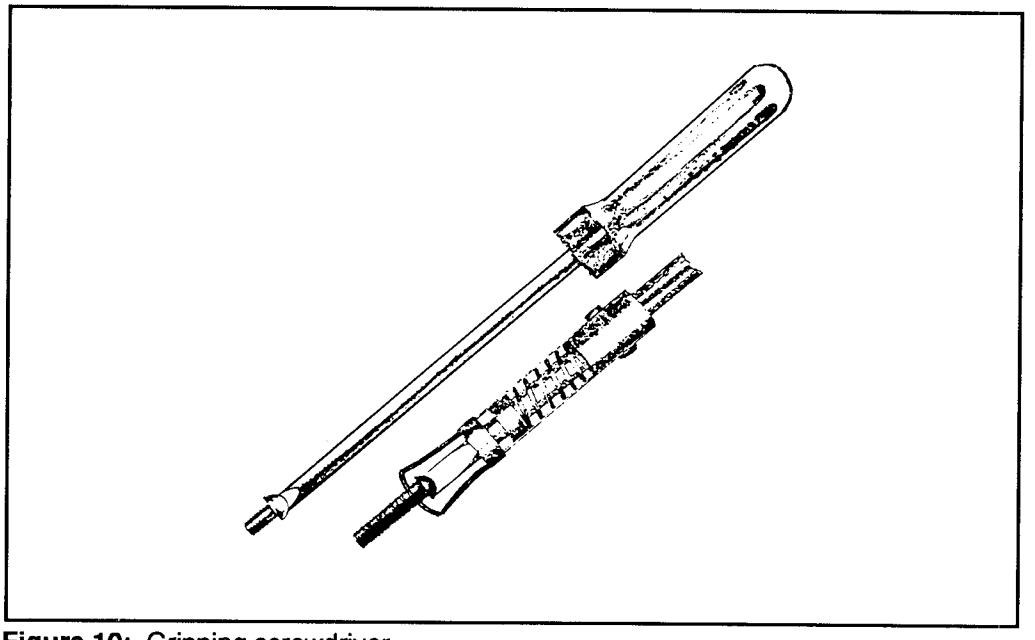

Figure 10: Gripping screwdriver

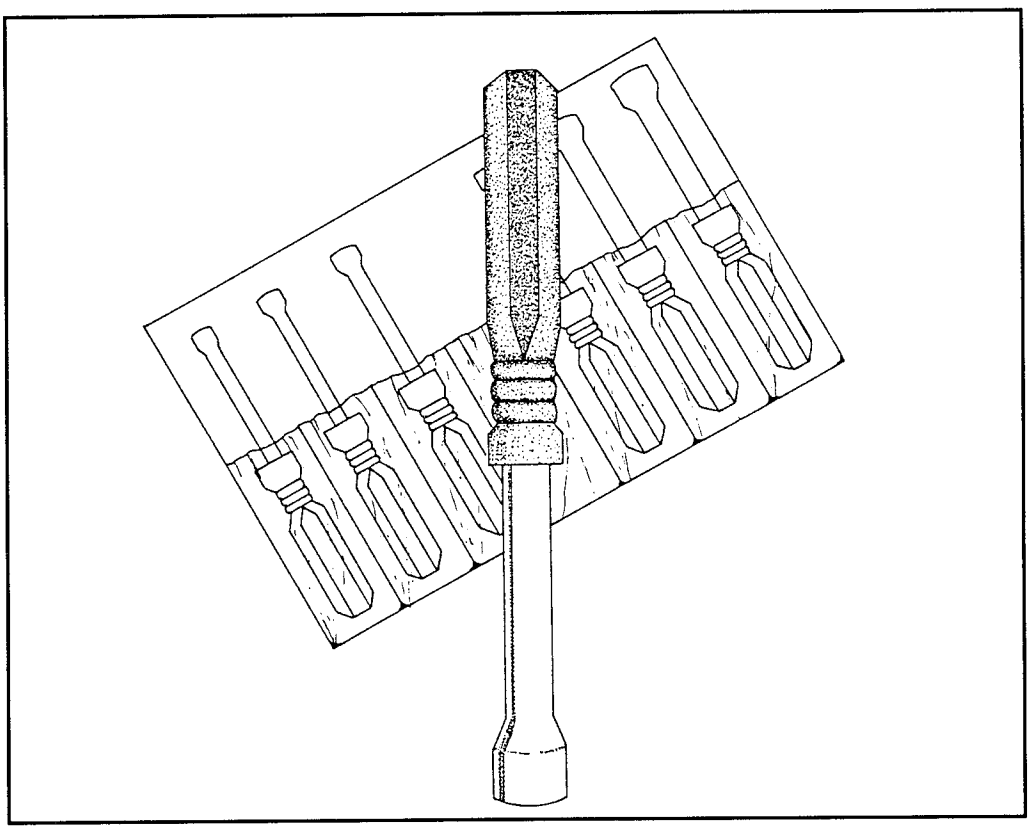

Figure 11: Nut driver set

You have a choice of a fixed set of sockets with the socket a physical part of the tool, or of a set with interchangeable socket ends. The interchangeable set will usually allow you to use regular sockets (generally those with a 1/4" socket mounting hole).

IC Tools

Installer/Puller/ Straightener

If you intend to be working with ICs—and these days there isn't much choice—you should have at least one IC installer and one IC puller. You may wish to purchase an IC pin straightener. This latter tool gently and safely straightens all the pins, which is a much better choice than trying to do this by hand with something like needlenose pliers.

Inspection Tools

The electronics technician has three built-in inspection tools—nose, eyes and

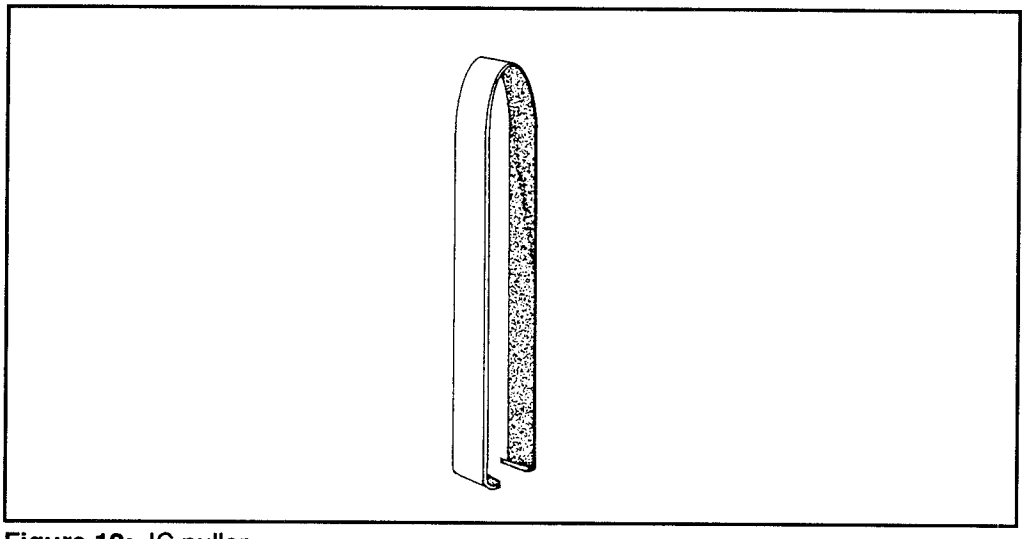

Figure 12: IC puller

ears. Other inspection tools are available to make better use of the natural senses, particularly the sense of sight and hearing.

Burned resistors and other components can often be seen and even smelled. Other components that are failing may give off characteristic noises. (Some capacitors, for example, will whistle if they are failing. A variety of mechanisms will also make noises.)

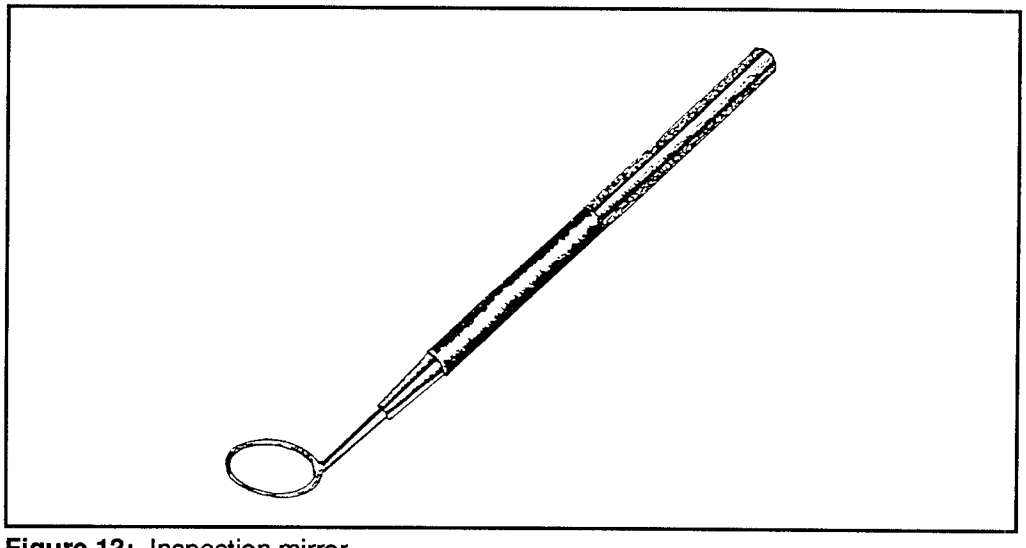

Figure 13: Inspection mirror

Stethoscope

A stethoscope can help you locate certain noises. A particular sound may, to your ear, seem to be coming from everywhere. The stethoscope can help pinpoint the source, or will at least narrow it.

Bench Lamp

For sight, the most basic inspection tool is a good source of light. This is often an adjustable bench lamp, but your tool kit should also include a flashlight and some spare batteries.

Mirror

At times, regardless of the amount of light, you will discover some places are inaccessible. At such times a mirror with a handle, such as a dental inspection mirror, will come in handy. It can be inserted into areas where you can't normally see, and is particularly helpful when you need to see the back of something that is hidden.

Magnifying Glass

You will need a magnifying glass to examine small parts, markings and codings. There will also be times when you need to have a close-up view of a connector, solder trace or other component or feature. At such times a decent magnifying glass can be invaluable. Because clear vision is so important, get a magnifier with good quality optical glass. A magnifier that distorts is not only less useful but could actually be detrimental.

Soldering

Another part of your basic tool kit is the soldering tool. This can be either one of the least expensive parts of the tool kit, or one of the most expensive.

Soldering Pencil

For most soldering a simple soldering pencil in the range of 15-40 watts will do. These can be purchased for as little as a few dollars. Others, with interchangeable tips and wattages will cost a little more.

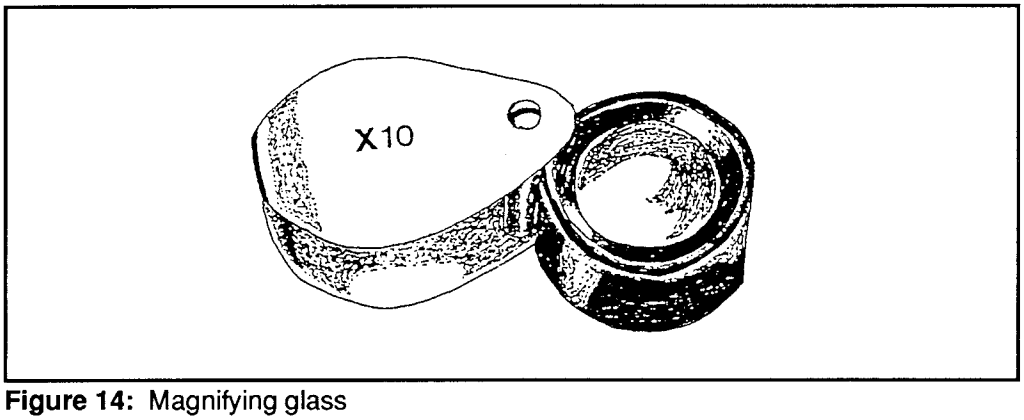

Figure 14: Magnifying glass

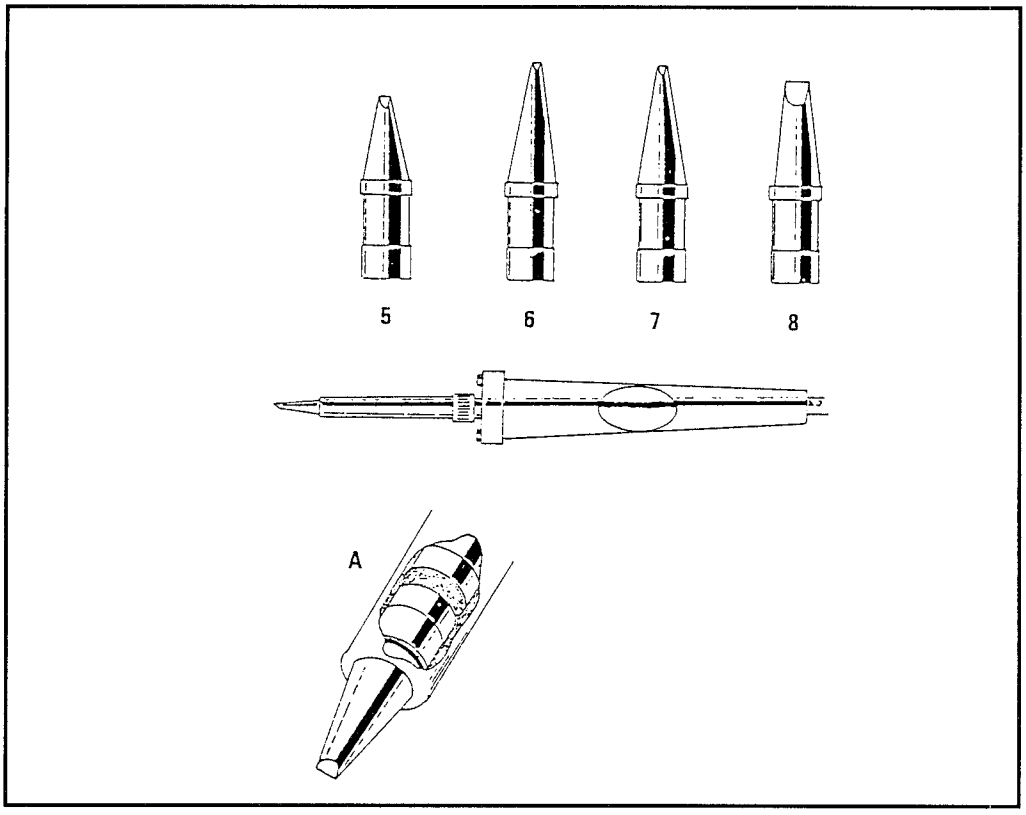

Figure 15: Interchangeable tips and temperature control can be critical

Not that long ago these soldering pencils were quite suitable for virtually every job. Although they are still "stock and standard" in the field, they are inappropriate for many modern circuits and components.

Soldering Tool with Grounded Bit

Certain components, especially ICs, are highly sensitive to both heat and static electricity. Care is needed to control the first and to eliminate the second. If you intend to work on such circuits, you will need a soldering tool that has a grounded bit to keep any stray static electricity from going where it shouldn't. It is also often helpful to have variable control of the heat.

Such tools are fairly expensive, but when compared to the cost of ruining a circuit, they are relatively cheap.

Tip ☞

In general, if you intend to do much soldering or desoldering, make the investment in a good tool. The $3 soldering pencil might be fine for soldering wires, but can cause expensive damage if used on a delicate circuit.

Regardless of the tool you purchase, be sure that it has a holder. This is usually a metal spiral stand that holds the tool at an angle, and keeps it away from any surface, while also creating a barrier against accidentally touching the hot tip.

The solder used MUST be suitable for electronics. Solder for plumbing often uses an acid core as a flux. This is unsuitable for electronics work. It can damage component leads and will almost certainly add stray capacitance.

Resin Core Solder

Resin (or rosin) core solder is used for electronics. This can be found in both wire and strip form. It is most often found in spools. The size will vary considerably. For most uses you will want the smaller wire sizes since they melt faster and thus reduce the possibility of heat damage to the circuit or component being soldered.

Desoldering

Just as you will need to solder, you will also need to desolder. This means you will be removing existing solder from a joint or component.

Desoldering Wick

One of the simplest ways is to use a desoldering wick. This is a resin-impregnated wire braid. The area to be desoldered is heated until the solder is melted. The braid is touched to the area, at which point it pulls the solder away from the area and into the braid. The used part is then clipped away and discarded.

Desoldering Bulb

A second method is to use a desoldering bulb. This tool is a simple syringe with a heat resistance nozzle (usually made of PTFE plastic). The bulb is squeezed,

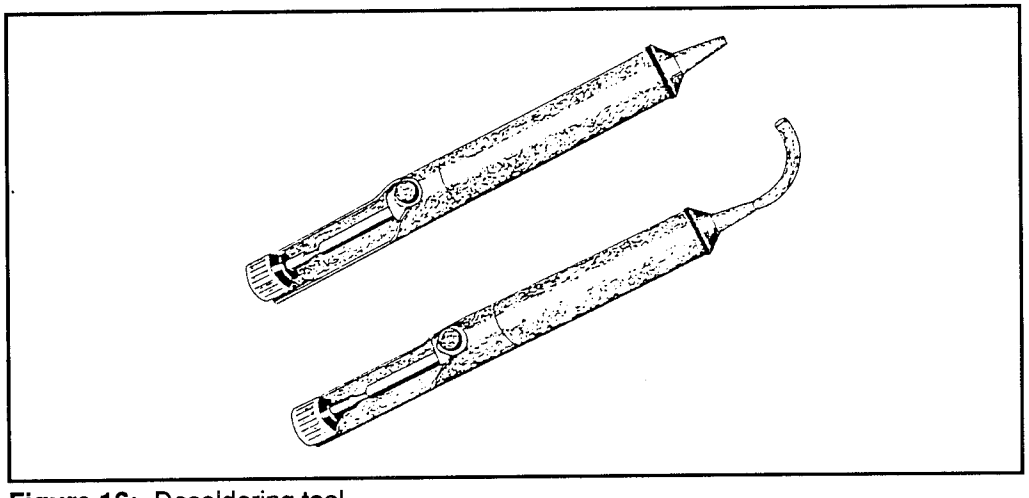

Figure 16: Desoldering tool

forcing the air out of the bulb. The solder is then melted, and when the tip of the bulb is placed near the liquid solder and the bulb released, the solder is sucked through the nozzle and into the bulb.

Spring-loaded Desoldering Tool

A little more expensive is the spring-loaded desoldering tool shown in Figure 16. A lever is depressed which moves and locks a plunger inside the tool. Again the solder is melted and the heat resistant tip is brought near the liquified solder. Then a button is pressed. This causes the plunger to snap back up inside the barrel, thus sucking in the melted solder.

IC Desoldering Bit

A more expensive tool, which is also available as an adaptor for some soldering irons, is an IC desoldering bit. This allows all the pins of a chip to be desoldered at the same time. The more expensive versions have built-in suction to remove the solder from the pins as the tool melts it.

General Supplies

A shop with every tool and piece of test gear will be almost useless without other supplies on hand. It will be impossible to carry every possible component, but you should have some of the common ones on hand at all times.

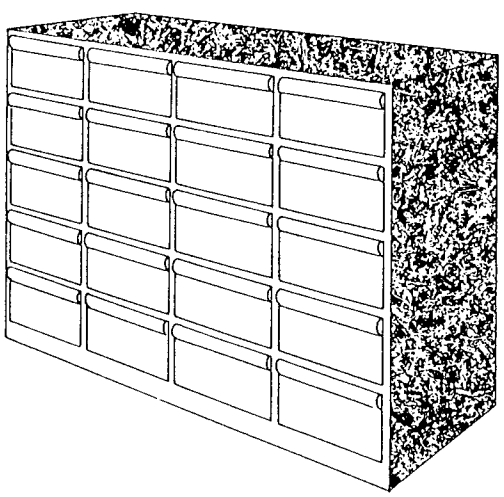

Figure 17: A multidrawer cabinet will help you find the part you need quickly

4/1 Tools for Repair

Multidrawer Cabinets

The first thing you'll need is a means of storing and sorting the parts. Merely tossing them into a box is almost as bad as having no spare parts at all. Multidrawer cabinets are easily obtained and are not expensive. The plastic kind, with clear drawers, allows you to see what is inside the drawer. Even then, clearly label each drawer.

You will almost certainly need more than one cabinet. You may even choose to have cabinets for each of the overall parts categories (resistors, capacitors, etc.), at least one for miscellaneous parts, and at least one for mechanical parts (screws, nuts, fasteners, etc.). How many cabinets you have, and what they'll contain, depends entirely on you.

Standard Resistors

You will almost certainly need a selection of standard resistors. This selection needs to be as wide in range as possible, as to value, power rating and other factors. Most can be carbon composition (since these are used most often) with a range of values between about 10 Ω and 1 MΩ. In general, avoid resistors with a tolerance of greater than 10%, and preferably most of your stock should be 5% tolerance or better. Remember, you can always install a better component.

The range of power ratings needed depends on the equipment with which you will be working. The most common is the 1/4 W resistor. However, there will be many times when 1/2 W or greater resistors will be needed.

Capacitors

Capacitors are more tricky. It's difficult to predict exactly which capacitors you will need, of which values and which types. Further complicating the assessment, some capacitors have a shelf-life, which decreases with adverse storage conditions.

Solid State Components

It is even more complicated to predetermine the solid state components, such as diodes, transistors and ICs. There are so many different kinds. Some are interchangeable under certain circumstances while others are meant for a specific purpose. This makes it almost impossible to have an effective stock on hand to cover all the different jobs (unless you care to invest thousands of dollars). You'll find, however, that as you work in your chosen field you'll notice certain trends that will make your decision easier. (This differs from field to field, so there are no general guidelines.)

4/2
Basic Test Equipment

Introduction

There was a time when only basic equipment was needed for troubleshooting and repair. As devices have become more complicated, so have the pieces of equipment needed to work on them. Before getting into the detailed descriptions, some practical advice concerning test equipment should be covered.

Your eyes, ears and brain are the best test equipment you can have. For most problems, use your senses to determine where to begin.

Ears work well for identifying the problem. Devices often make noises while in operation. Often you can hear if something is wrong, and where. A motor that is whining or grinding, a gear that clacks, or a capacitor that is whistling are all examples of problem noises. In audio repair you must hear the output to decide if a piece of equipment is working properly. (Keep in mind that even if you adjust all settings to the manufacturer's specifications, the end-user must be satisfied with the operation.)

For example, an individual was having problems with a Hi-Fi VCR which played the left channel audio at a level higher than the right channel audio. The right channel audio fluctuated from loud to soft, making the audio annoying and undesirable to hear. He listened to the VCR and decided to clean it. He then listened again, to find out if this was the solution. The problem persisted, so he checked the audio board. He replaced the board and realigned the unit.

Eyes are the best way to locate most problems. If a power circuit has failed, look to see if there are any indications. Burn marks, blown fuses, leaking capacitors, and broken wires are just a few examples of things you might spot upon visual examination. In a more extreme example, a piece of mainframe computer equipment was sent back to the factory because it wouldn't come on. Upon opening the power section, the scorched remains of a mouse were discovered. It had apparently crawled into the unit and stepped across two points carrying several thousand volts. The remains were removed, and the section replaced.

Your brain is a marvelous computer of complex neurons and synapses. Stored within the many cells is the practical knowledge required to make the correct,

decisions for repairing items. Think problems through thoroughly and logically, but keep in mind that sometimes the solution may defy logic.

The design of most equipment these days is moving toward smaller electronic parts. These parts are becoming harder (and sometimes impossible) to troubleshoot on an individual basis. This is due, in part, to the number of functions an individual Integrated Circuit (IC) can perform. With the surface mounting of ICs and the miniaturization of other components, more advanced test equipment is required. This section describes the test equipment required for electronics repair.

Test Equipment

Work Station Supply

The workstation power supply is usually a variable VDC, with sometimes variable VAC outputs. It can be a lab-grade variable voltage supply or a well-filtered, high-current supply. Usually it is best to have both with voltages from a few volts to a few thousand. Figure 1 shows a typical workbench power supply. A voltage divider may be required for units that have several different power inputs. A typical voltage divider that you can build is shown in Figure 2.

The power supply can be very useful in place of items that require the use of

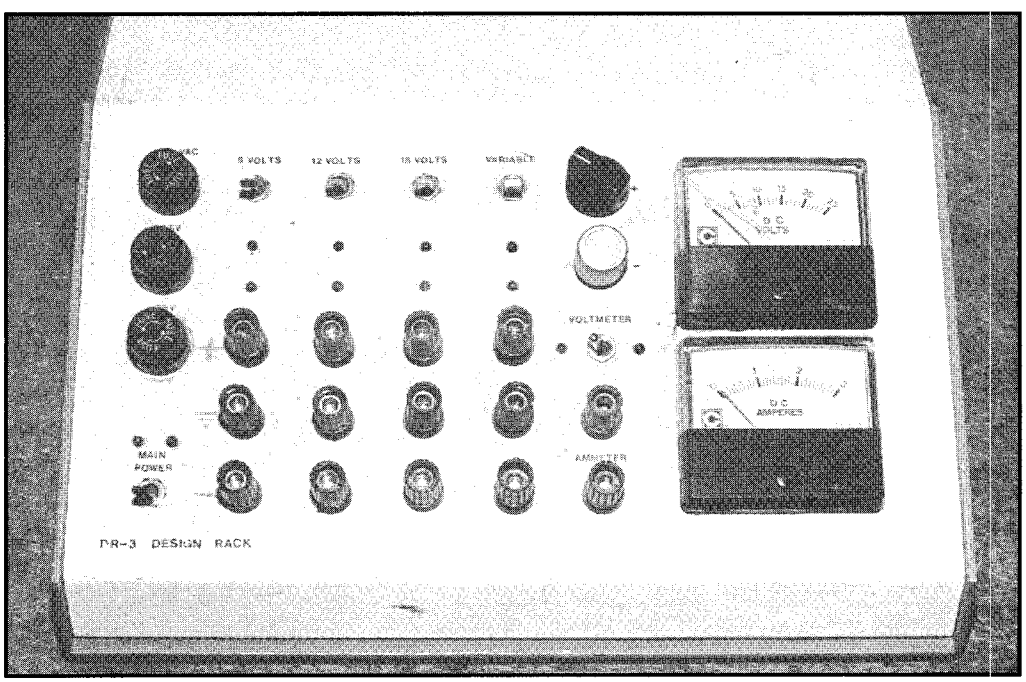

Figure 1: Typical workbench power supply

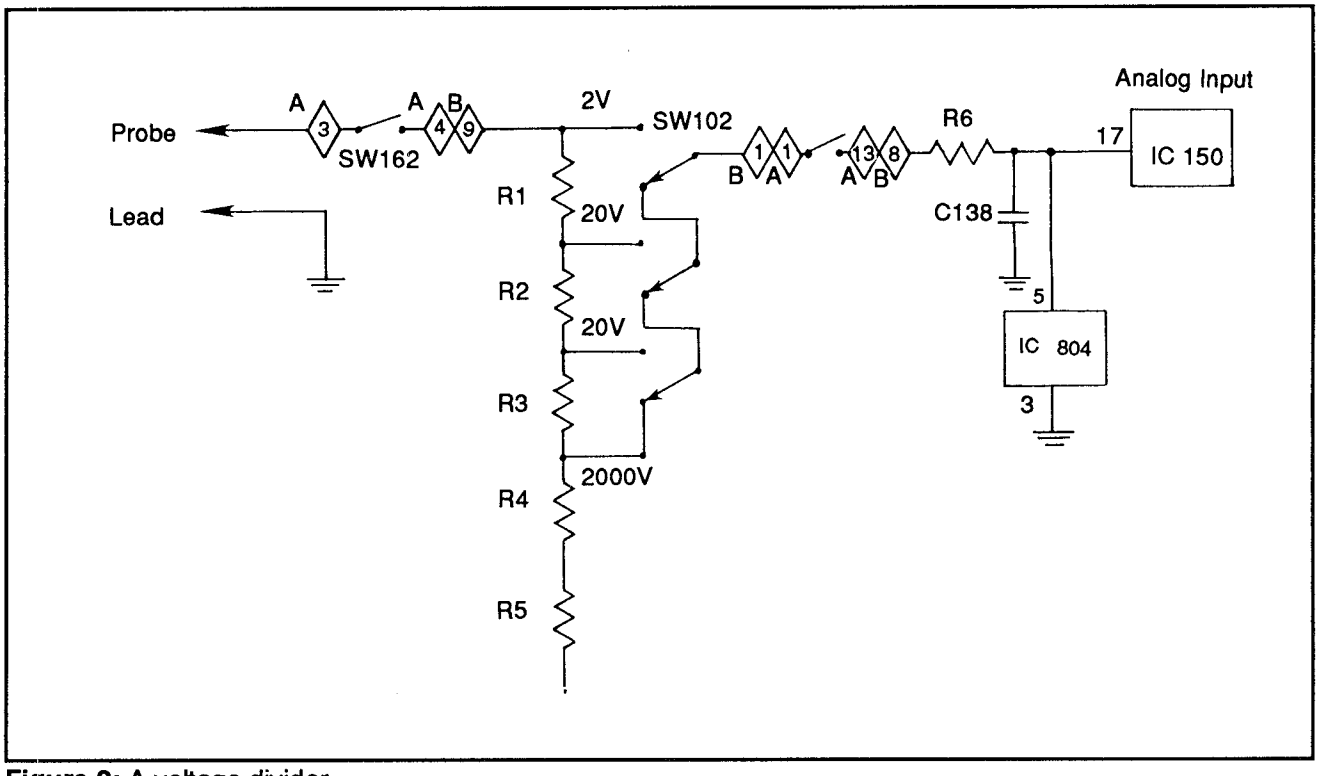

Figure 2: A voltage divider

batteries. Also, it is best to use the workbench power supply, rather than the tested item's power section, to avoid damaging the unit. When testing, remove or bypass the internal power supply.

When testing troubles in output stages of stereo amplifiers, the DC power supply can be used. The current limits would be set to the level for the amplifier stage requirements, thereby avoiding possible damage to expensive transistors.

Capacitance Checkers/ Substitution Box

A capacitance checker simply measures the capacitance of a capacitor. The test leads are hooked to the capacitor with respect to polarity (if any) and the scale of the meter is read. The range selector is set for the step higher than the suspected capacitance. If the reading is within a marginal error of perhaps 10 percent, the capacitor can be assumed to be good.

Some digital volt/ohm meters have capacitance checkers where you plug a capacitor into slots and read the meter. These digital multimeters (DMMs) have multiple ranges for checking capacitors. You can attach test leads from these slots and test capacitors in circuits.

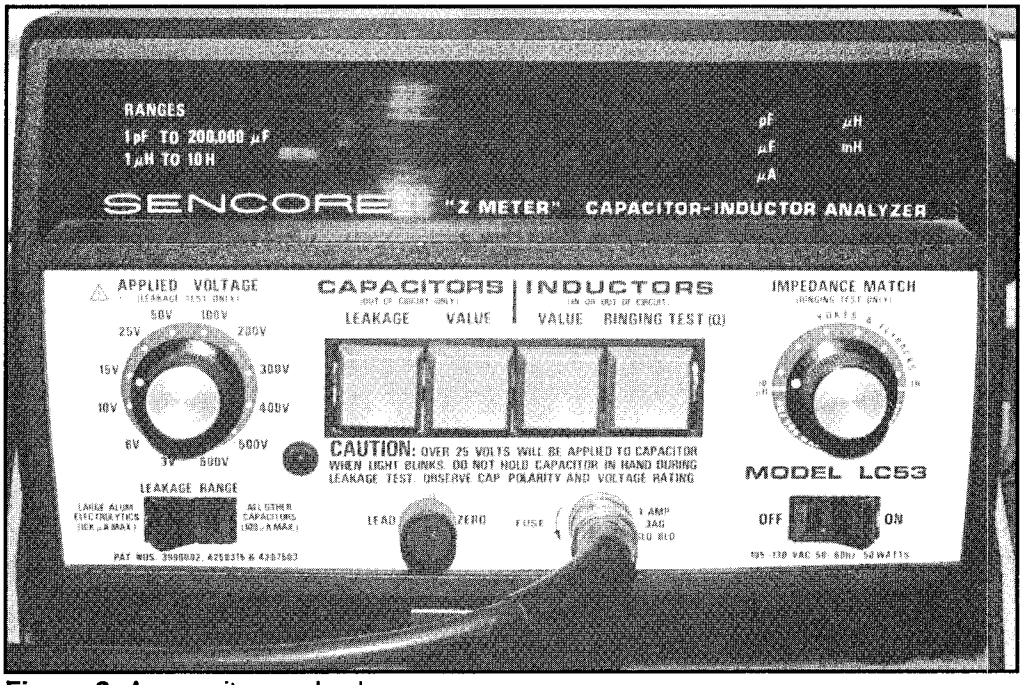

Figure 3: A capacitance checker

Capacitors suspected of leaking can be tested by an ohmmeter. The resistance of a capacitor should be in the several MΩ range.

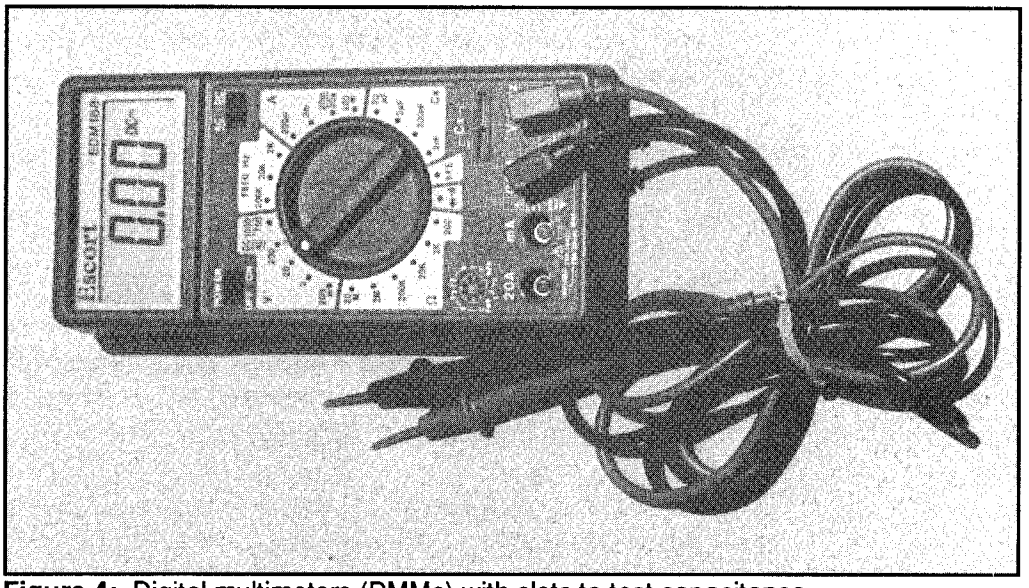

Figure 4: Digital multimeters (DMMs) with slots to test capacitance

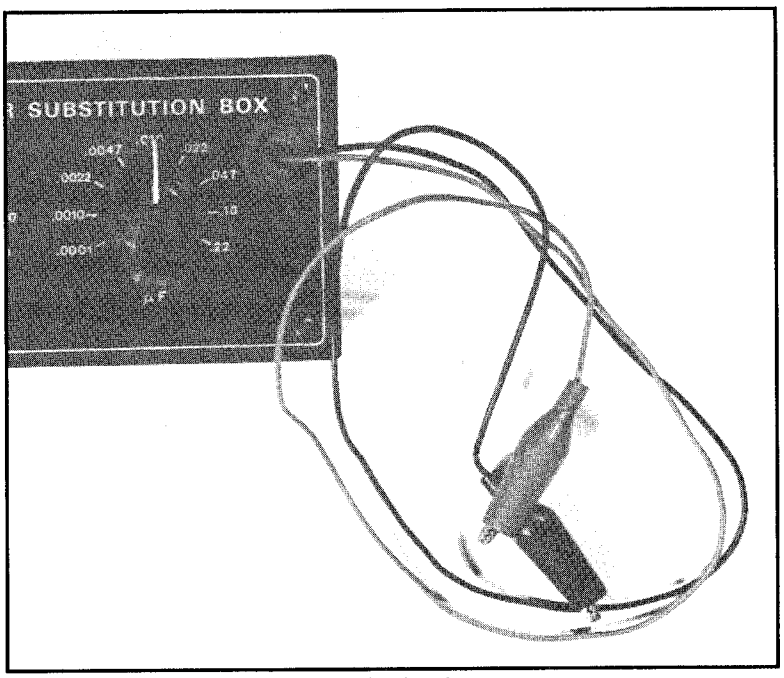

Figure 5: A capacitance substitution box

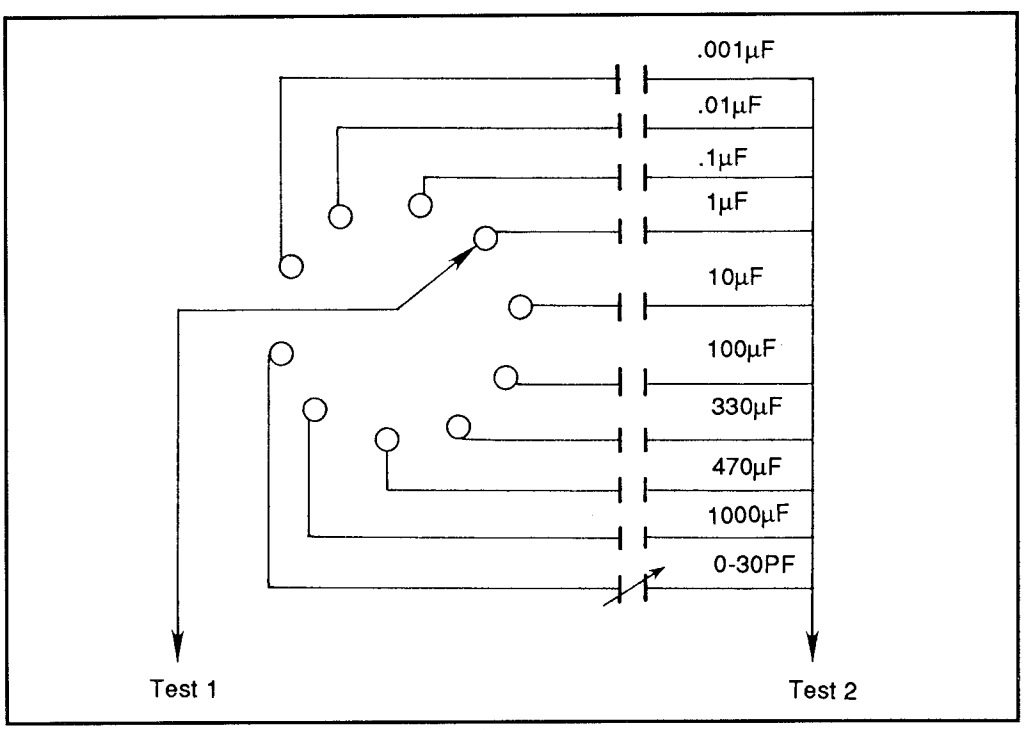

Figure 6: Capacitance substitution circuit

When connected, the initial reading will appear low and progress to an almost infinite reading. Smaller value capacitors may charge faster, displaying an infinite reading almost immediately.

Capacitance Substitution Box

A capacitance substitution box is shown in Figure 5. This is a variety of capacitors built into a casing, hooked to a rotary switch with a common output.

The use of such a simple device can determine either the replacement, or proper capacitance needed for a circuit being tested. Capacitance substitution boxes are easily built. Figure 6 shows a sample circuit.

Resistance Substitution Box

A resistance substitution box is shown in Figure 7. Some resistance substitution boxes may be piggybacked with capacitance substitution boxes as shown in

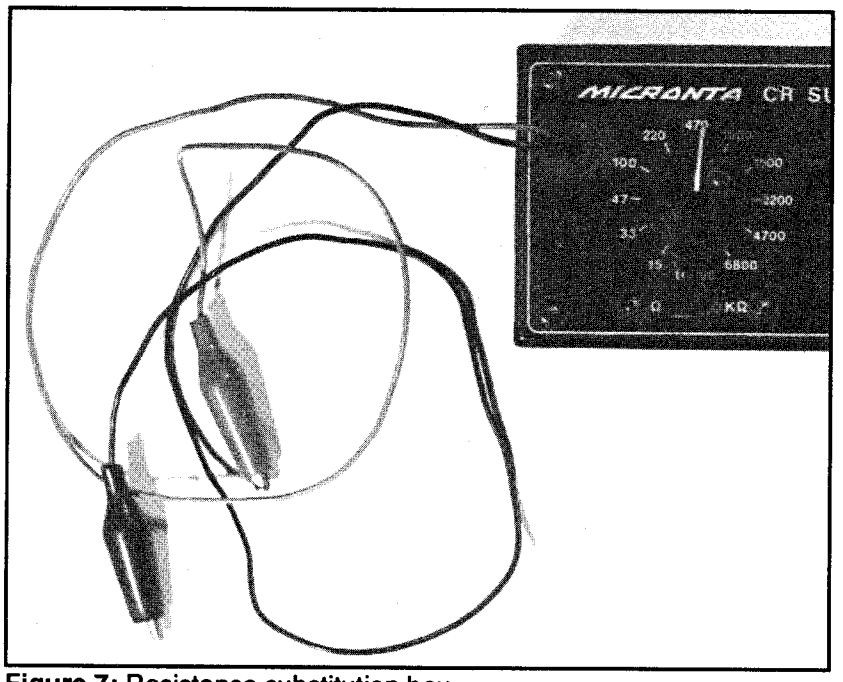

Figure 7: Resistance substitution box

Figure 5. Fixed resistance values are selected via the rotary switch. A circuit diagram of a resistance substitution box is shown in Figure 8.

Signal Tracers

A signal tracer is a simple electronic device which may consist of aural (speaker) and visual (meter) signal monitoring sections. The signal tracer traces an RF signal through various stages of a receiver.

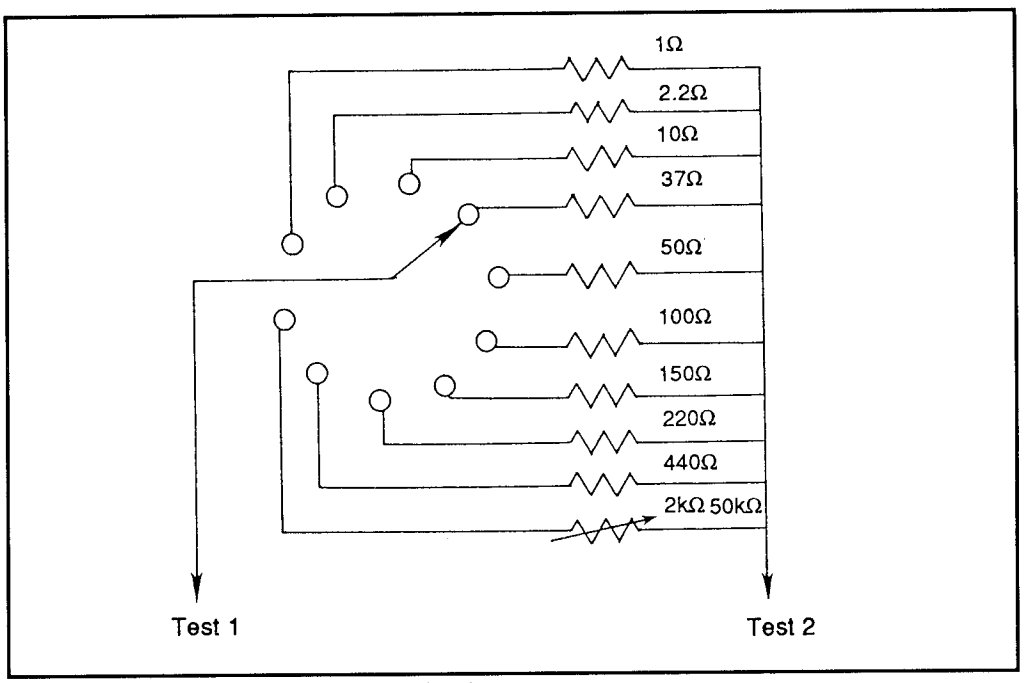

Figure 8: Resistance substitution circuit

The signal tracer is connected to the input section first, then the output section of each stage in the signal path. The trouble can be found in the stage where the signal disappears.

Figure 9 shows a simple signal tracer. The selector switch is set to the RF position and an RF detector probe is used to check for the signal. The ground lead of the RF probe is connected to the chassis ground. The probe tip is connected to the antenna terminals. The gain control of the tracer is turned up until you get a signal level indication.

The test probe is then moved along the signal path from the base to the collector of the RF stage. Next, connect the test probe to the base of the mixer stage and to the collector.

Slowly work through the input and output of each IF stage to the detector. As you move through the receiver, the signal from the tracer should increase, and the gain will have to be cut back.

Over time you will obtain a feel for what is the proper gain for a particular stage. The gain control is adjusted so as to produce a constant reading on the meter from one circuit to the next.

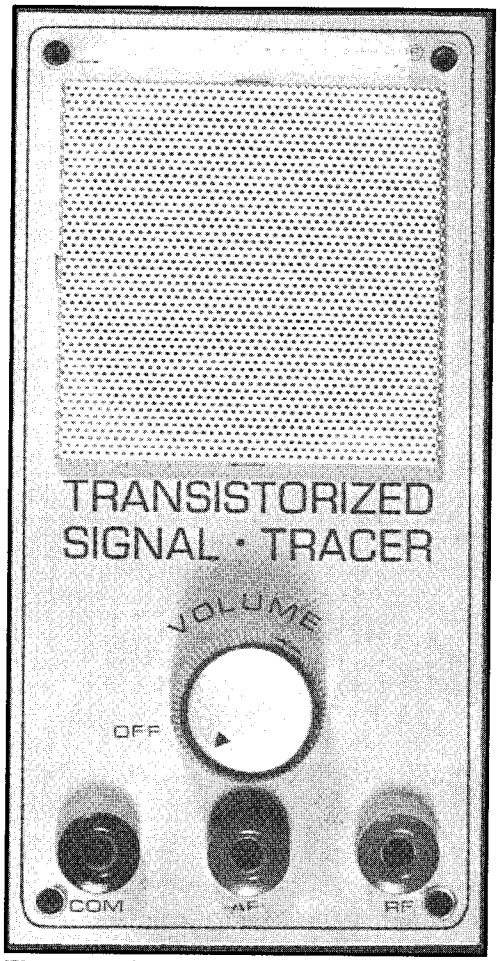

Figure 9: Signal tracer

Transistor Checkers

A transistor checker is shown in Figure 10. It can be used to check low-, medium- and high-powered PNP and NPN transistors. The transistor checker can check for electrode open circuits, current gain, short circuits and visual indications of signal output information. A typical transistor checker should be able to test all transistor types (FET, N or P) and all power ratings with the same test.

Modern transistor checking can usually be done with multimeter checkers. Refer to the DMM's manual. Typically there will be an hFE socket (Figure 11) with several slots labelled E, C, B in which a transistor is inserted. Then the transistor reading is displayed on the meter.

Transistor checking is usually a "Go/NoGo" form of troubleshooting. A transistor checker can be used to determine the polarity of an unknown transistor

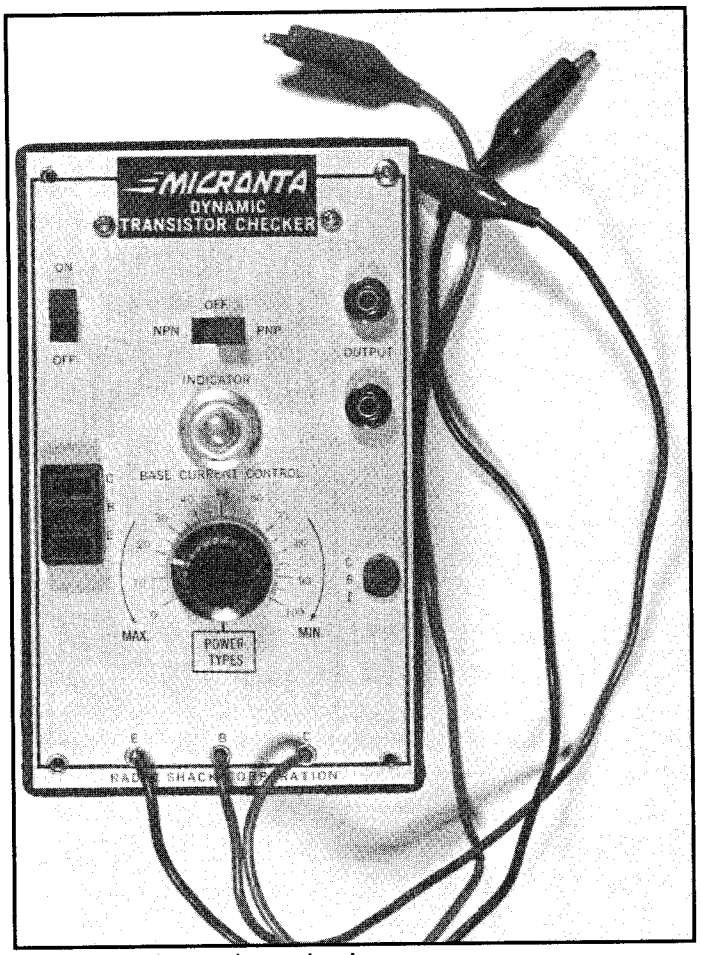

Figure 10: A transistor checker

and the operating current. This is very useful when trying to match a new transistor to an unknown old one.

The transistor checker may have a lamp that glows when a transistor is connected and the unit is adjusted correctly. The brightness of the lamp varies in direct proportion to the signal output. The greater the output, the brighter the lamp.

Other units may have some kind of analog or digital meter to display the statistics for the transistor.

The transistor checker can be used on transistors alone, or in a circuit. Test leads are provided for connecting the unit to a transistor within a circuit. The leads, as well as the test sockets, are labeled as to the emitter, collector, and base of

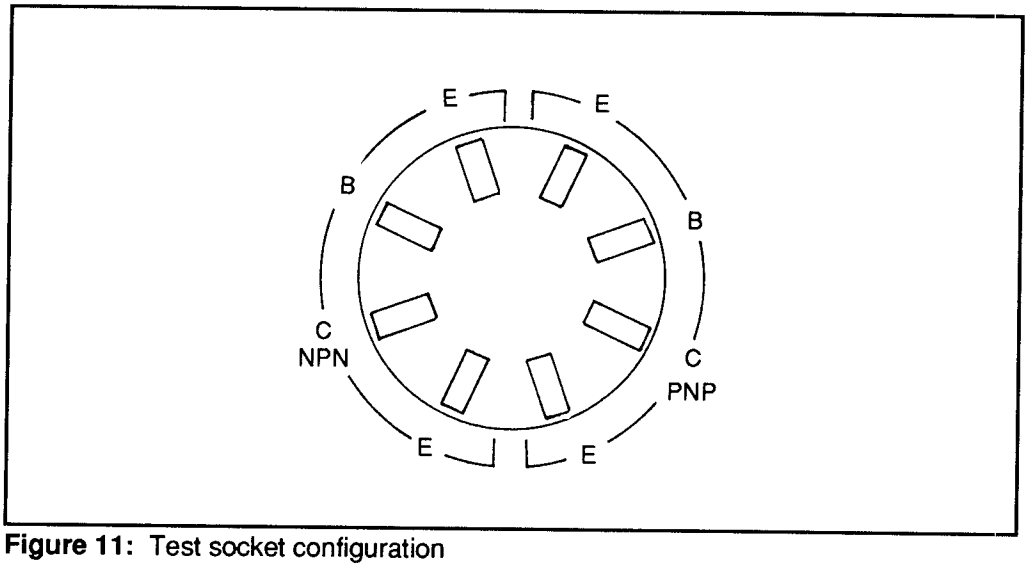

Figure 11: Test socket configuration

transistors. Figure 12 shows typical designs of transistors and which leads are designated collector, emitter and base.

Testing transistors with a transistor checker is simple and straightforward. A stand-alone transistor is inserted in the proper holes, or connected to the proper test leads of the checker. In this example, the current control knob is placed at zero. The lamp is switched on and the correct selection of the PNP/NPN switch is made. Transistors will only fire the indicator lamp when the switch setting is correct.

Slowly rotate the current control knob and note the point at which the lamp glows and then drops out. This indicates the operating current of the transistor. The higher the value, the greater the gain since the base current is decreased as the knob is rotated towards 100. Maximum base and collector currents occur at zero.

If the indicator lamp does not operate, either the transistor is bad, the settings are incorrect, or the transistor specifications fall outside the parameters of the tester.

Checking transistors in a circuit depends on the shunting resistances of the circuit in which the transistor is used. If the transistor shows an adequate gain in a circuit, it can generally be considered good. If no gain, the problem could be a bad transistor. If, for example, a circuit should have a gain of 10 but shows no gain, or improper gain, the transistor should be removed and rechecked out of circuit. Checking for leaky transistors must always be done out of circuit.

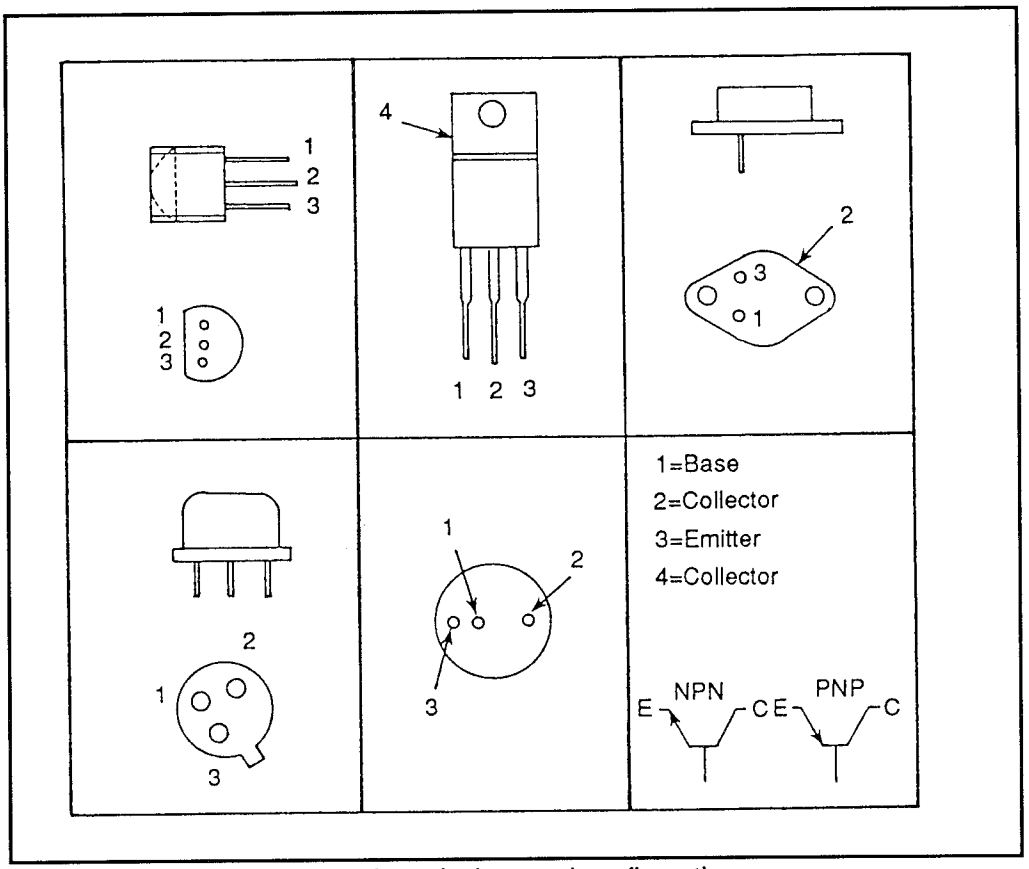

Figure 12: Some typical transistor designs and configurations

Tube Testers

Tube testers have almost become passé, however, there are still a number of devices—particularly older ones—that use tubes. It may be a good idea to have a portable tube tester, or access to one at your local parts supplier.

Tube testers have an extremely simple design. Figure 13 shows a typical home tube tester.

To test a tube, find the proper socket on the tester, insert the tube, look up the tube on the tube chart and set the dials. The unit will indicate whether the tube is good or bad, and with the press of a button, you can determine if there is a gas leak.

By looking at a tube you can usually see a visible indication of a gas leak. There is a silver lining on the top portion of the tube that extends down the sides about 1/4 of an inch. If this is missing, or only a small amount remains, you can assume

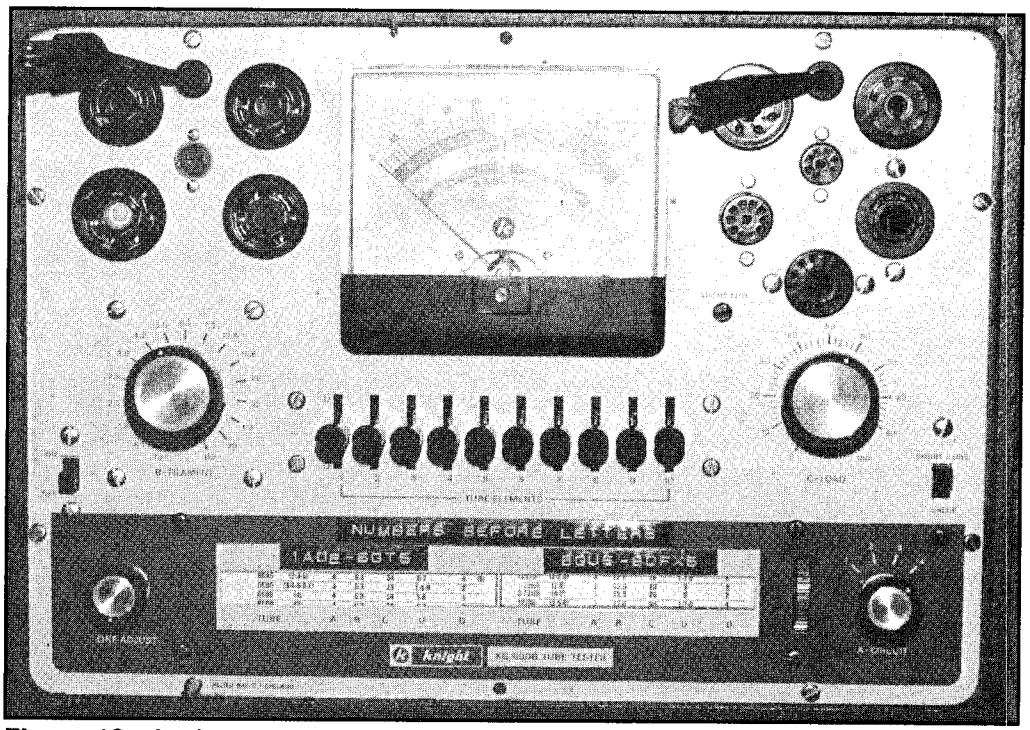

Figure 13: A tube tester

the tube is leaking. This may not be true for all tubes, so a tester is the best way to be sure.

Tube testers are not readily available on the market. Finding one will require some foot work and phone calls. Antique stores are a good source to find a low-cost, portable home tube tester. Finding a vendor for tube replacement is difficult and in some areas impossible.

Automatic Test Equipment

The ultimate piece of test equipment is a fully-automated test unit. Since more electronic appliances are becoming microprocessor-based, more systems have built-in testing routines. With the right test equipment, one can read and process this information. Also, equipment circuits of today are so closely dependent on each other that proper measurements must be taken simultaneously to be valid.

As appliances become more complex, so do the test units used to repair them. Figure 14 shows a stand-alone, fully computer-based and controlled automatic test unit. More manufacturers are creating test units or cards that can be added to your home PC, allowing complete analysis of an appliance being tested.

4/2 Basic Test Equipment

There are two basic methods of creating automatic test equipment (ATE):

- stand alone
- PC based.

ATE is programmable and capable of performing and displaying measurements autonomously or in a system. Measurements are not limited by the user with this sort of test equipment, and any number of different measurements can be performed in any number of periods. With a digital meter you can only take a reading and process it at that point in time. With an ATE, the unit can be programmed to take samples at predetermined times over a time period, store the data, and display it at the convenience of the operator.

If you have a PC, an ATE may be the best way to go. In the long run, the costs would be far less than buying separate individual pieces of test equipment.

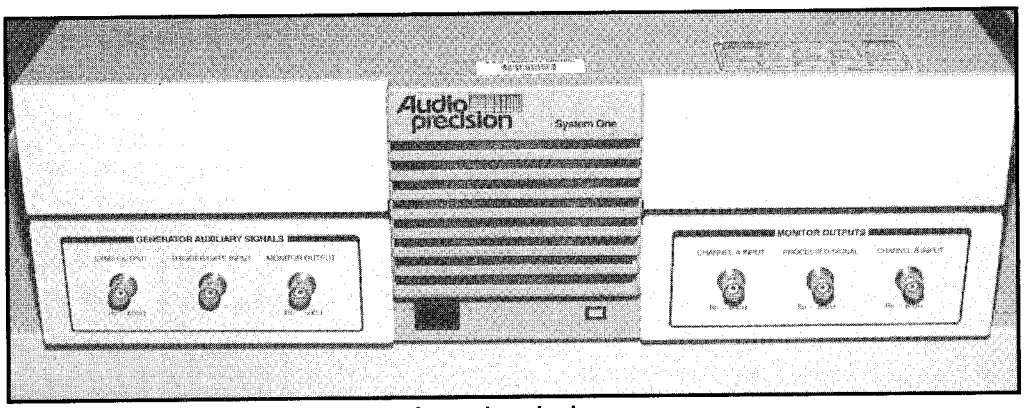

Figure 14: Computerized automatic testing device

4/3
Advanced Test Equipment

4/3 - DMM
Digital Multimeter

Introduction

A good, reasonably priced digital multimeter (DMM) can be one of your best pieces of test equipment. The DMM can be used for measuring transistors, transistor checking, continuity checking, diode checking, capacitance checking, and voltage checking. A digital meter inputs analog signals and then converts the output through an analog-to-digital converter and displays it digitally.

The meter in Figure 1 has 24 possible ranges with six different input slots. There are two switches, one for power on/off, and the other for AC/DC switch selection. The AC/DC switch selection only affects the voltage ranges.

The inputs are the transistor slots, capacitance slots, volt/ohm/Hz input, and two amperage inputs. There is also the common or black lead slot. The mA slot can handle up to 999 mA before blowing the internal overload fuse. The 20 A slot

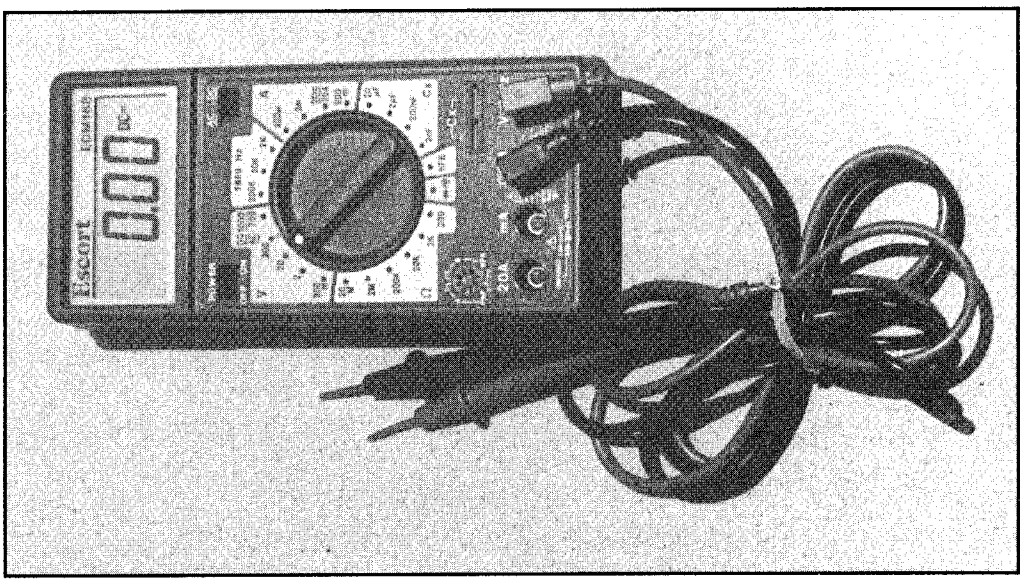

Figure 1: Digital multimeter

can handle up to 20 amps before blowing the internal fuse. The exact specification for the maximum amperage that can be inputted to the unit in each of the slots will be noted on your meter or in your manual. Exceeding these limits can be costly.

The output is in the form of discrete numbers rather than as a pointer deflection on a continuous (analog) scale. The major advantages of this are accuray, speed and ease of use.

Why Digital and Not Analog?

Compared to an analog meter, the DMM is superior in almost all areas. The display can be complete with decimal point and polarity signs. The DMM eliminates the problems of the scale factor, interpolation and lead connection.

The DMM has greater resolution than the analog meter. The analog meter can be accurate to one part in one hundred, or one percent. A DMM has an accuracy of less than ±1 percent of the reading (any reading) and a resolution of one part in 2,000. The best DMMs are accurate up to ±0.0005 percent with a resolution of about one part in 100,000.

An analog meter takes about a second or more to make a reading. A DMM makes about 5 readings per second, and in some applications much more. Therefore a DMM is more accurate and faster. It is often worthwhile to spend a little extra to go digital.

Figure 2 illustrates the difference between digital and analog. The circuit being tested has a transistor, Q100, with a .5 volt difference between the base and emitter. If the value is off by just .1 volts, the output will change the next processing circuit. Using an analog meter with an inherent accuracy of about one percent is not sufficient in a circuit allowing no more than a .1 percent variable. The DMM would have no problem testing this.

DMM Features

DMMs have built-in autopolarity features. You do not always have to remember which leads should be hooked to what. This feature will make circuit troubleshooting easier when you have to make positive and negative voltage measurements. The plus or minus sign may be visible next to the numeric display to indicate polarity. Some meters will only turn on a negative sign with the assumption that all other numbers are positive readings. This feature is useful when adjusting circuits like FM detectors on stereo equipment and circuits that must be adjusted to a null value.

With the autoranging feature in DMMs, the meter will indicate whether the range is too low or too high. Some meters, like the one shown in Figure 3, automatically choose the best scale for the equipment being tested.

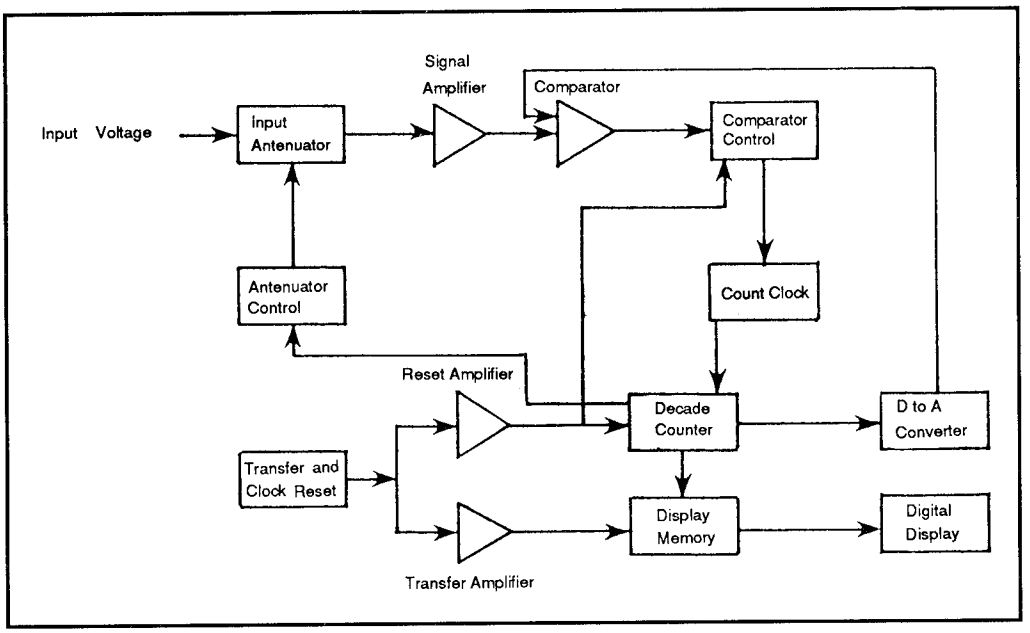

Figure 2: An example circuit

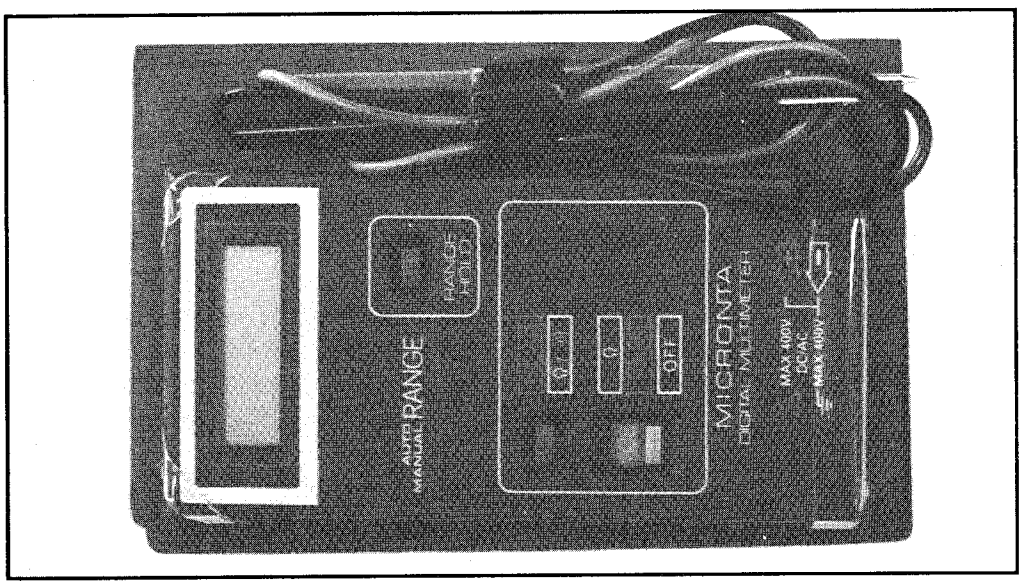

Figure 3: An autoranging DMM

Most DMMs have an overload protection circuit that shuts the unit off, or blows an internal fuse when exceeded. Your DMM manual will indicate the operating range for your meter. Typically, voltages may be measured to 1000 V AC and DC, and up to 10 A.

Some meters will not be protected if you exceed these limits. Take care when hooking your meter up to circuits with extremely high voltage.

The Multiple Ranges

Figure 4 shows a multimeter with features like voltage, current (amperage), ohms, frequency, capacitance, and transistor measurements. This multimeter is also capable of measuring diodes or continuity checks.

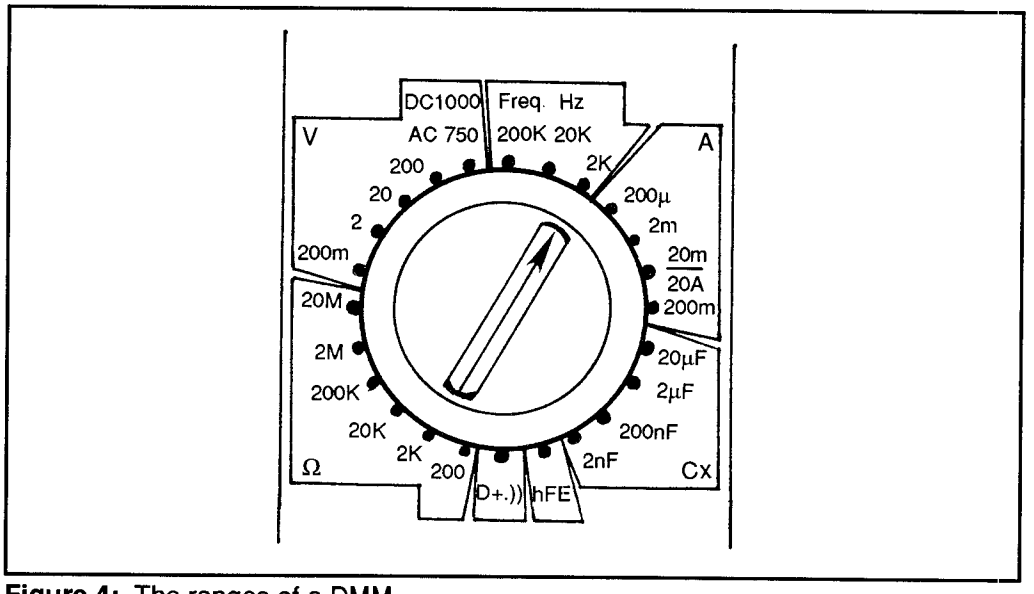

Figure 4: The ranges of a DMM

Voltage Tests

Voltage checking with a DMM is a simple process. Select the range high enough to measure the voltage you are checking. The DMM meter can handle DC voltage to 1000 V and AC to 750 V. If you do not know the range, begin at the highest setting and work your way down. This will protect the meter. Although most DMMs are protected by an internal fuse, if this blows you will have to change it before continuing. By using a higher range, this cannot happen.

Connect or touch the black lead to ground and the red lead to the test point. Read the meter. If the meter displays a 1, beeps, or shows a plus sign, the selected scale is not high enough. If the reading does not seem satisfactory, try the next scale down to increase the significant digits. Next to the numeric display will be the words AC or DC and possibly a minus or plus sign. Readings in excess of the meter capability will ruin the meter.

Current Tests

To measure current, a circuit in the DMM converts the current to a voltage drop across a known resistor and measures the voltage. Figure 5 shows an example

circuit of how this is accomplished. In this example, current flows through resistors R2, R3, R4, and R5, which develop a maximum voltage. Changing the input selector to less resistance allows more current to flow and a higher value of current to be read.

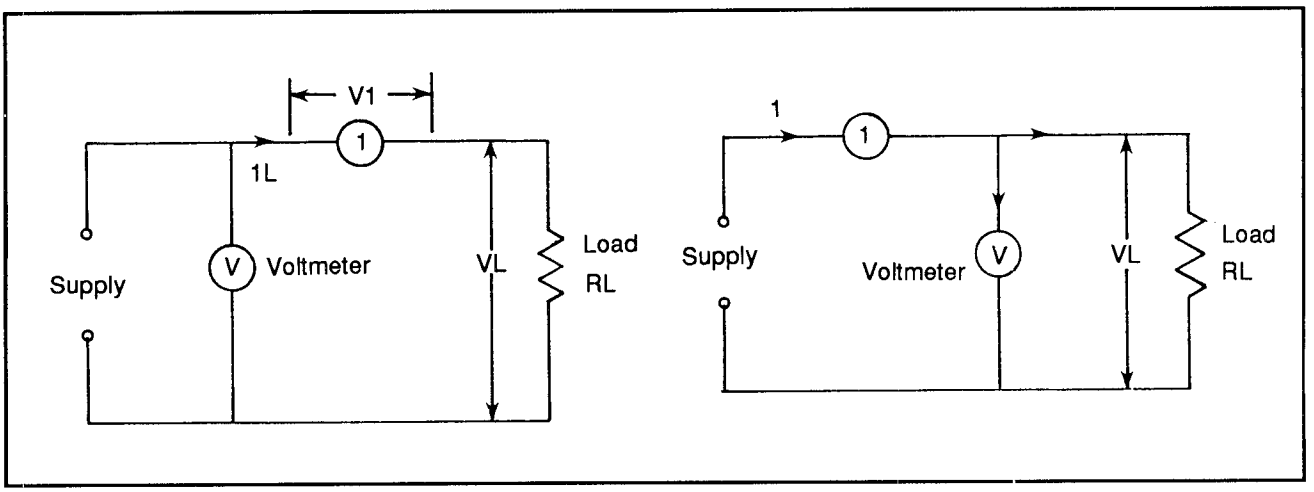

Figure 5: Current testing circuit

Ohms Tests

To measure ohms a DMM will supply a reference current that will generate a constant current across the unknown resistance so that the voltage can be measured. (Figure 6 shows a circuit that may be used to do this.) For example, the unit might be required to measure between 0 V and 1 V across the resistance X (Rx). If Rx is 0 Ω (no resistance) then the voltage will be 0 V. When Rx = infinity, the voltage exceeds 1 V and the meter indicates an over-range condition.

Using a 1 mA current source, we will achieve 1 V when Rx = 1,000 Ω. As a higher

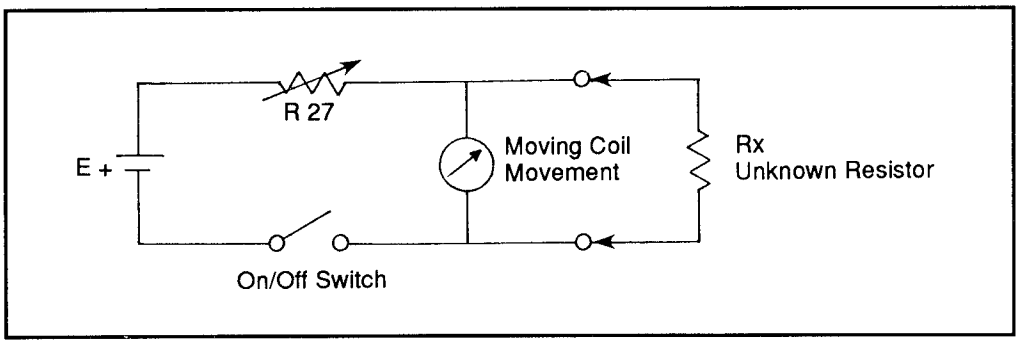

Figure 6: Resistance checking circuit

resistance is measured, a lower current value is needed. To measure a 1 MΩ resistance would then require a 1 μA source. Each range of the DMM will use a different current reference voltage, and these specifications may be present in your manual.

Using an ohms checking range can be accomplished in circuit or out of circuit. Attaching a resistor to a meter out of circuit will indicate the resistance for the tested resistor. Checking in circuit will give an accurate reading, but additional circuits may cause this reading to be false or altered. In the sample meter, you can read resistance as high as 20 MΩ and as low as 0.1 Ω.

Frequency Tests

The meter in Figure 7 can register frequencies up to 200 kHz. Some meters may be able to do more, others less. Next to the numeric display will be the kHz symbol. Frequencies in excess of 200 kHz will not damage the meter but they will not be able to be read. This meter can read a minimum of 1 Hz. When connecting, start with the highest meter setting and connect the probes. Scale down step by step as necessary.

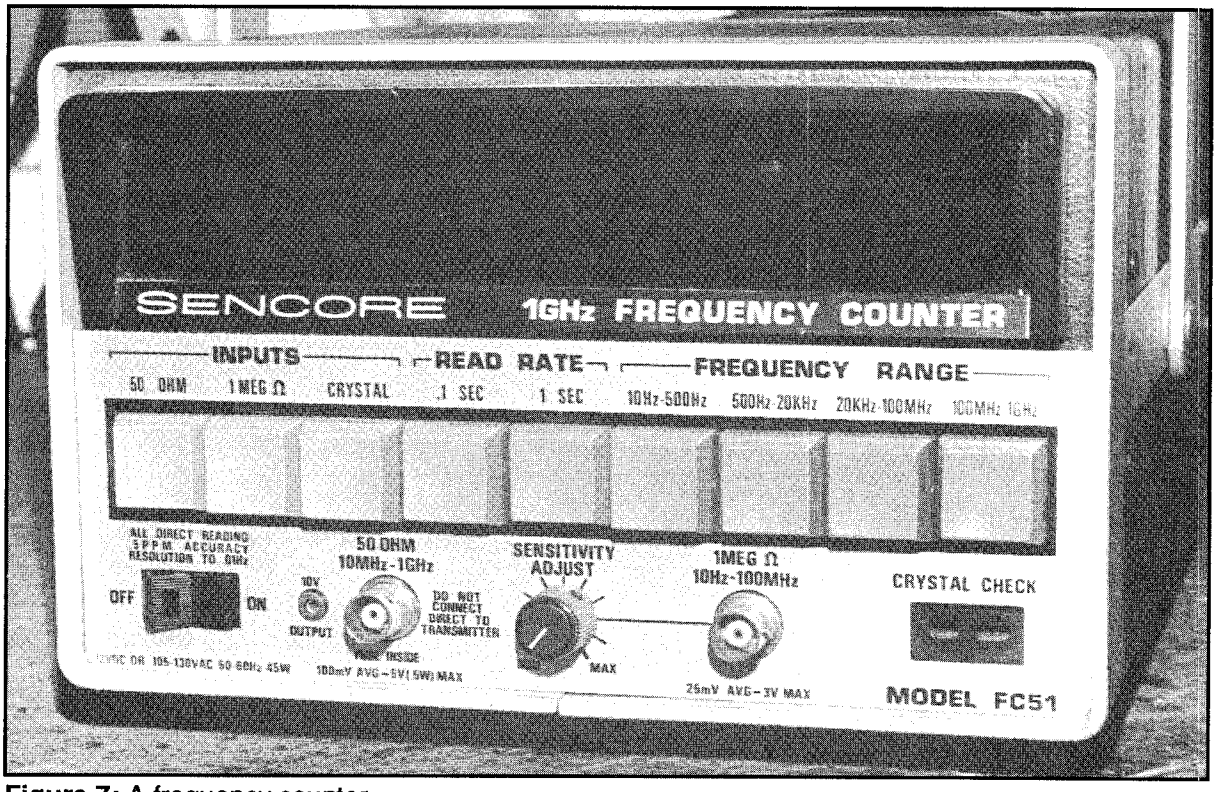

Figure 7: A frequency counter

Diode Tests

Diode checkers of DMMs simply pass a low current through a diode to indicate forward voltage, short/open, and good/defective error. Proper connection of the anode and cathode are required for testing. The display will indicate the forward voltage drop of the diode. A good silicon diode will show between 0.500 V and 0.900 V. If the diode is defective, the reading will be 0 indicating a short circuit. Reverse the leads and see if the display shows a 1, which indicates a good diode. Any other value may indicate a bad diode.

When checking continuity, a buzzer will sound and the scale should read 0. Any other reading will indicate some form of resistance or the presence of a short. Any resistance under 100 Ω will set off the buzzer.

Capacitance and Transistor Measurement

By setting the range selector to the Cx position, you can measure the capacitance in the capacitance measuring socket. Before connecting any capacitor into the socket, short the capacitor leads together to discharge it. Any voltage sent to the measuring socket may damage the DMM.

Set the meter selection to the Cx position and insert the capacitor into the socket. Take care to note the correct polarity for the capacitors, if applicable. Read the meter. This particular meter can measure between 2 nF and 20 µF.

Transistor hFE Measuring

Setting the range selector to the hFE position will allow the measurement of PNP or NPN transistor types. The transistor must be inserted into the correct sockets as noted on the meter or in the meter manual. After the transistor is inserted into the unit, it will indicate the correct hFE value for the tested transistor.

4/3 - F
Frequency Counter

An Introduction

Frequency, time and event measurements are usually provided by test equipment with some type of counter (usually frequency counters or universal counter timers). These counter devices gate a signal over time and count the number of pulses of the signal during that time.

Figure 1 shows a basic general purpose counter. General purpose counters can measure frequencies from DC to about 500 MHz. Typically a general purpose counter will have two input channels. Each channel is identical in operation and either channel can be used to measure frequency. Through the use of various

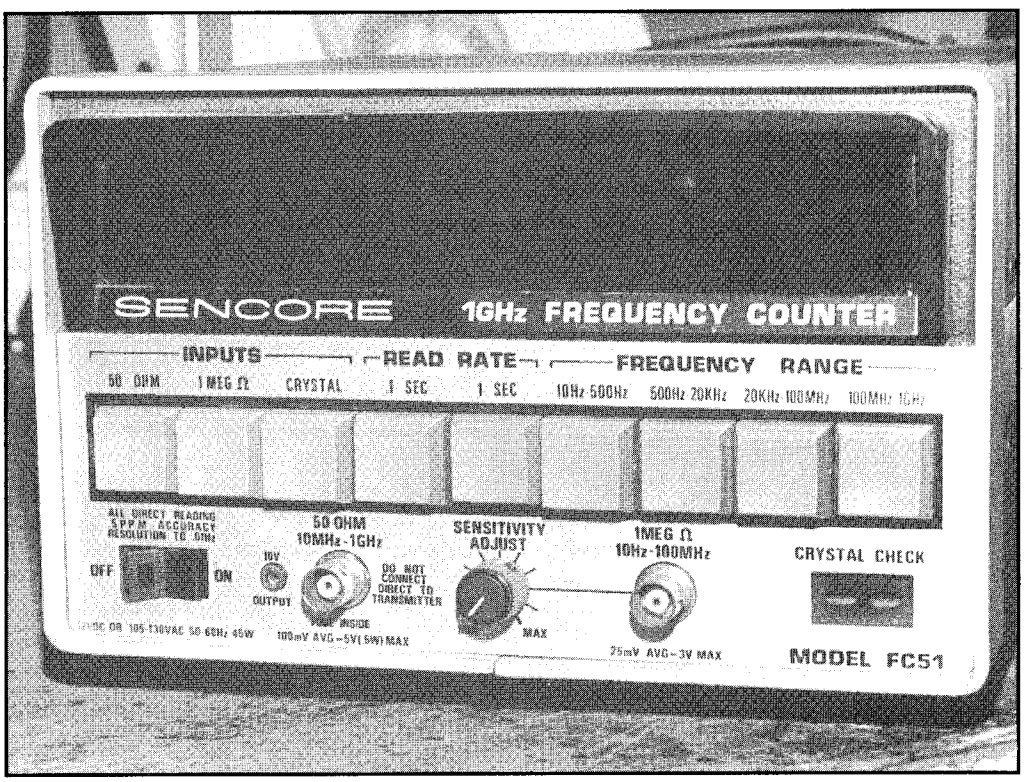

Figure 1: Frequency counter

controls, signal conditioning is possible. It is also possible to adjust signal components like signal attenuation and trigger level.

Channels A and B are direct gated counters and combined with reciprocating gated or multiplying counters measure the 500 MHz level. Frequency counters able to measure above this level will include a third channel, C, which is designed to use higher frequency adaptations of direct gated counters. Higher frequency circuits are usually separate from the lower frequency circuits to avoid the possibility of higher frequency interference.

Figure 2 shows a block diagram of a basic counter. The input signal has to be cleaned up before being processed. This occurs in the signal conditioner. The signal must be decreased if too high, and when too low, amplified. The signal must also be adjusted to be a clean square wave. If the signal is DC, it is converted to AC to eliminate undesirable DC bias on the signal.

The frequency counter then varies the slope of the signal and sharpens it by sending it through a Schmitt trigger. In the Schmitt trigger, hysteresis is added, making the system less sensitive to noise. Figure 3 shows the effect of the counter's Schmitt circuit. The hysteresis band, and the point of trigger, is sometimes adjustable on counters to allow more control over the waveform.

The counter gate is controlled by an internal time-base generator. This circuit is

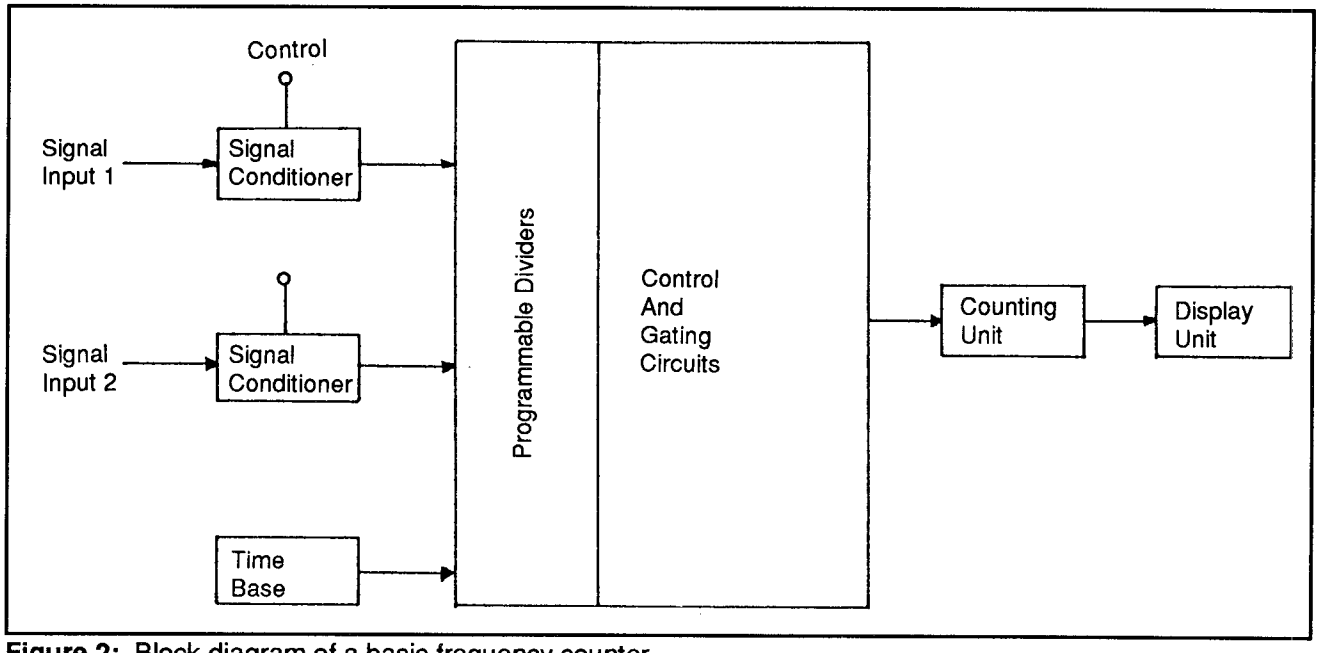

Figure 2: Block diagram of a basic frequency counter

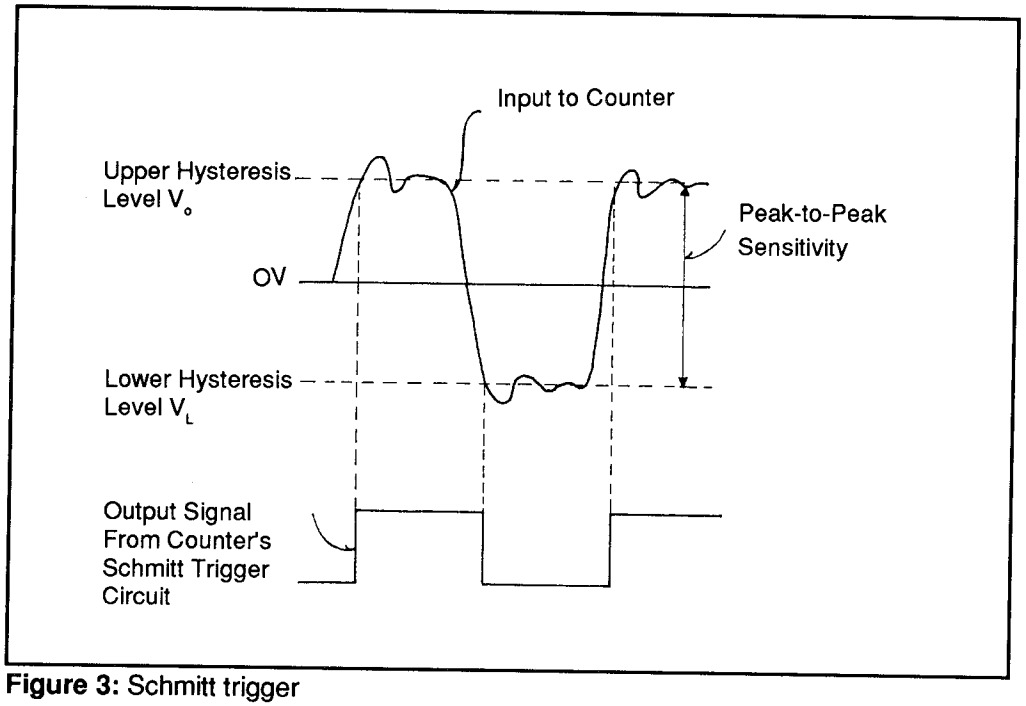

Figure 3: Schmitt trigger

a stable reference oscillator, usually set at 1, 5 or 10 MHz. The crystal is either a temperature compensated crystal oscillator (TCXO) or an oven controlled crystal oscillator (OCXO). TCXOs require microprocessor control and are less accurate than OCXOs. Time-base can be input from an external source when the internal source proves to be inaccurate for certain applications. Standard reference signals such as a broadcast signal may then be used for reference rather than relying on the internal time base.

Both the time-base signal and the input signal are sent to the programmable dividers. The dividers provide independent control over these input signals to meet the requirements of different measurement modes.

Flip-flops, registers, counters and gates are found in the control and gating section. These sections control the signal path through the counter in order to get the desired measurement mode. The internal time base normally controls the counter gate, but by allowing the gate to be controlled externally and counting the time-base signal pulses, a measurement and display of the time interval between opening and closing the gate is made.

The number of pulses passing the gating circuit is measured by the counting unit, and this information is displayed on the LCD, LED or VDT display. First,

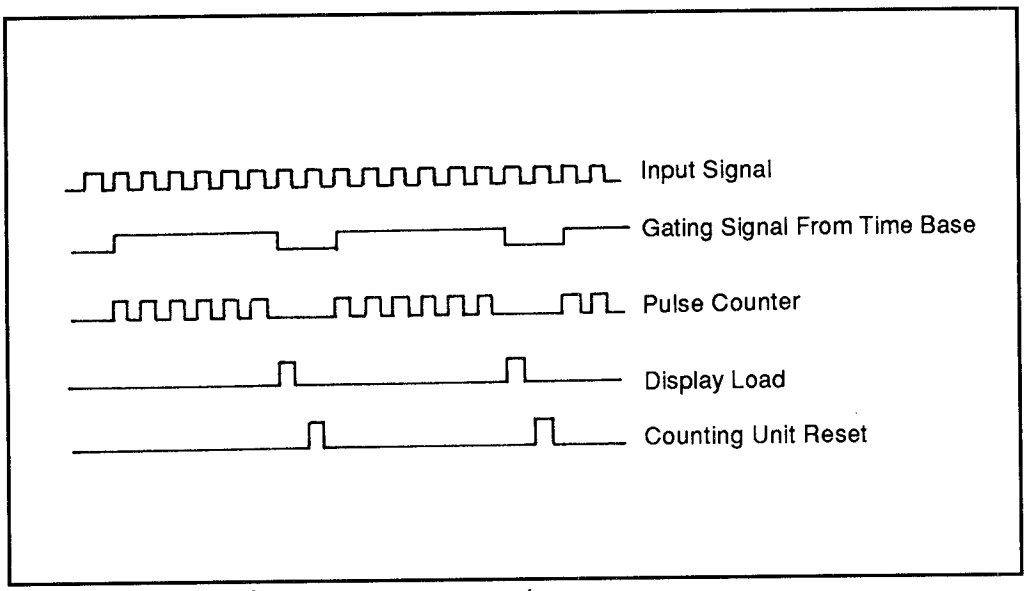

Figure 4: Taking a frequency measurement

however, the unknown time interval measurement of the input signal is compared to a known quantity (the time-base) by gating. The frequency can be calculated and displayed when the period of the time-base signal is known.

By opening the counter gate manually, the device can do event counting. This is done either by a front panel button or by a pulse input which allows the counter to add the received signal pulses to Channel A. A received pulse going to Channel B closes the gate. The counter displays the number of pulses collected at Channel A during the opening and closing period of the gate. During this type of counting, the time base is not counted or used to control the gate of the counter.

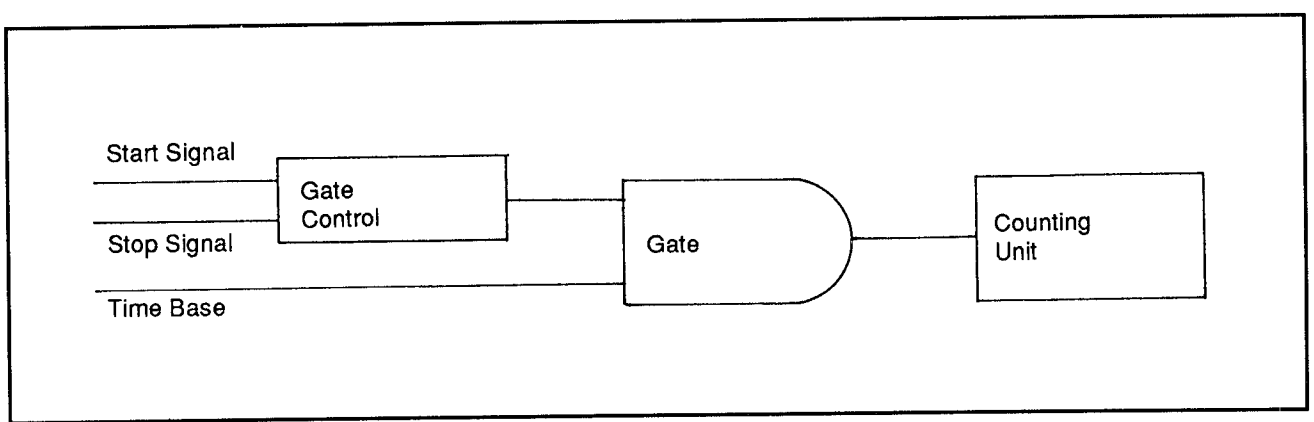

Figure 5: Time interval measurement technique

Measurement Process

There are several different modes with which counters operate to measure different parameters. These parameters include: frequency, time interval, totalizing, period, and ratio.

Frequency Measurement

Figure 4 shows the circuit arrangement for frequency measurement. Frequency measurement is the most common counting method. In this circuit the time-base controls the operation of the gate. The time-base will open the gate and allow counting for a given time (t). The total pulses (n) are counted, then divided by t to get the frequency (f=n/t) of the input signal. For example, if there was a count of 50,000 over a period of 0.2 ms, the frequency would be 250 kHz.

A more accurate way to measure frequency is to take the average of several samples. This is known as frequency averaging. Frequency averaging can only be used on a repetitive waveform. The counter assumes that any inaccuracies are random enough to be averaged to zero on a large sample.

Time Interval

Figure 5 shows a time interval measurement technique. The gate is controlled by separate start and stop signals. The start and stop signal parameters are controlled by setting different options on the counter.

By using time-interval techniques, measurements can be made on repetitive signals to see signals in the picosecond range. The start and stop are very important when measuring small time intervals, and they must have equal delays.

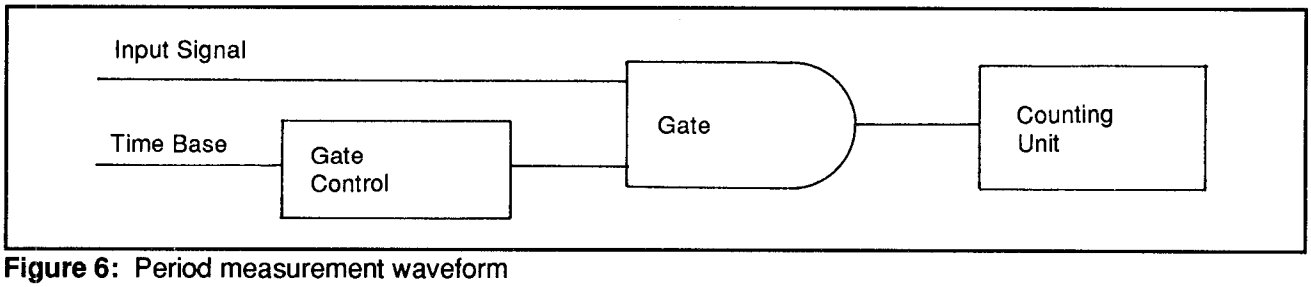

Figure 6: Period measurement waveform

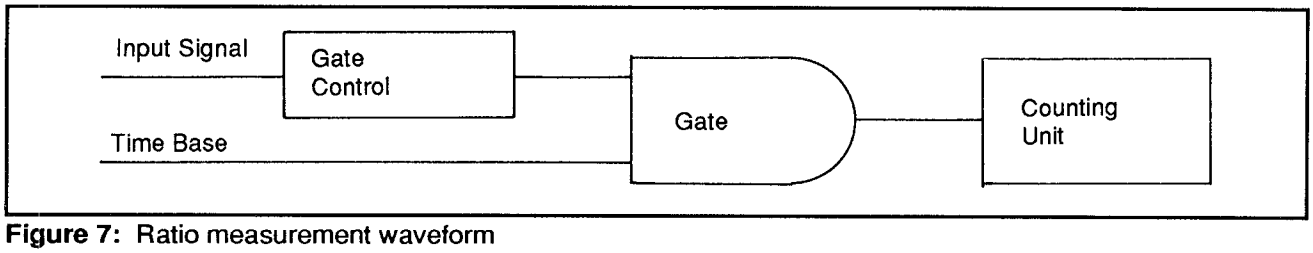

Figure 7: Ratio measurement waveform

Totalizing Measurement

Totalizing is very similar to time-interval measurement, but the time-base is replaced by the pulses to be totaled. In this mode the unit measures the number of pulses between the start and stop signals. These conditions may also be controlled by the front panel. Totalizing may be done by a preset counter in which a count value is loaded into the instrument and an output occurs only when the preset count value is met or exceeded.

Period Measurement

Period measurement (Figure 6) is the time required for a signal to complete one cycle. The time-base pulses during the time the gate is open are totalled by the counting unit. When checking low-frequency measurements, it is best to use period measurements. Period averaging is a technique used to increase the accuracy of period measurements. In low-frequency measurements a long measurement time is needed. To measure within .01% accuracy you would require 100 seconds to obtain a resolution of 1 Hz. One way to measure low frequencies is to multiply the low signal by a factor of 100 or 1000 before being counted. Then the output is divided down by the same factor to give a proper display.

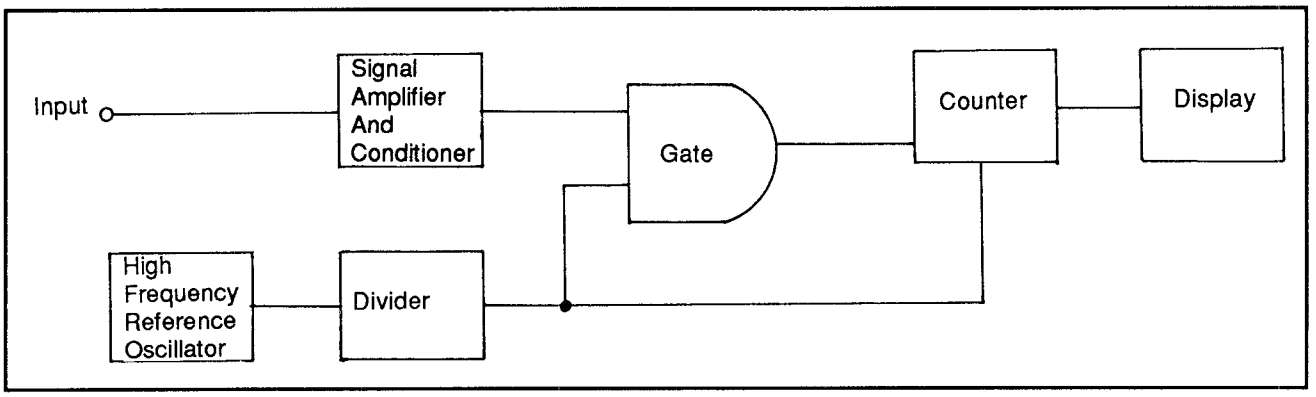

Figure 8: Block diagram of a high frequency counter

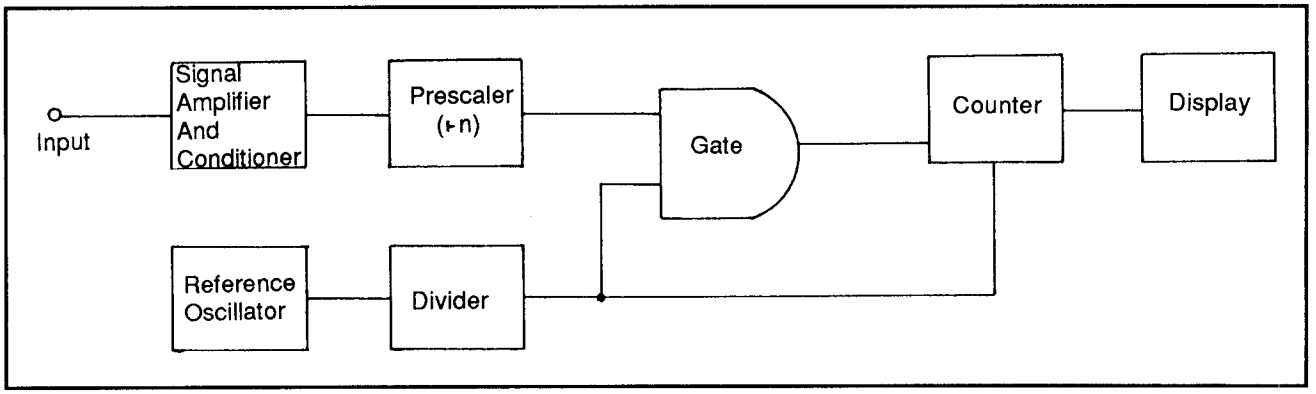

Figure 9: A prescaler circuit

Ratio Measurement

Figure 7 shows the circuit arrangement for ratio measurement, which is the same as that used in frequency measurement. The ratio between the two input signals is measured.

To get a ratio measurement, the high frequency is fed into the signal line and the low frequency is fed in to replace the time base. The low frequency controls the opening and closing of the gate, and the high-frequency pulses are counted and ratioed against the low. The frequency count is sent to the display. To increase the accuracy, the unit may average several samples before displaying a frequency count.

High-Frequency Counting

There are two basic types of frequency counters available: those that measure high frequencies and those that measure low frequencies. High-frequency counters use direct-gated counters.

In direct-gated counters, the output of a high-frequency reference oscillator, or time-base, is divided to achieve very accurate, controlled time periods. Figure 8 shows a block diagram of an average high-frequency counter, direct-gated circuit.

Direct-gated counters are very good at measuring signals above 500 MHz. They are limited in range by the speed of the circuits themselves.

One method of measuring very high frequencies is by the use of prescalers. Figure 9 shows the block diagram of a prescaler circuit. A prescaler circuit can be an internal device, or an add-on device which, when used, will divide down the input frequency to a frequency level which the direct-gated counter can measure. The gating period in a prescaler is much longer than a normal counter. Digital counters have high-frequency limitations but prescalers do not since they are simple dividing circuits.

Another method for using direct-gated circuits in measuring high frequencies is by heterodyning the input signal to a lower frequency. Figure 10 shows a block diagram of a heterodyne counter. Heterodyne counters can measure frequencies over 20 GHz and are much more complex than other counter types. The resultant signal is counted during a gated period, and controlled by the heterodyning signal before being displayed. A variation of the heterodyne circuit is the synthesized heterodyne counter which uses a microprocessor to create a synthesized oscillator reference signal and controls the measurement procedures.

Low-Frequency Measurement

A good response to a low-frequency signal requires a very long counting period. For example, to count a 10 Hz signal requires a period of 100 seconds to achieve an accuracy of ±1 percent. Direct gating would not be very useful for this.

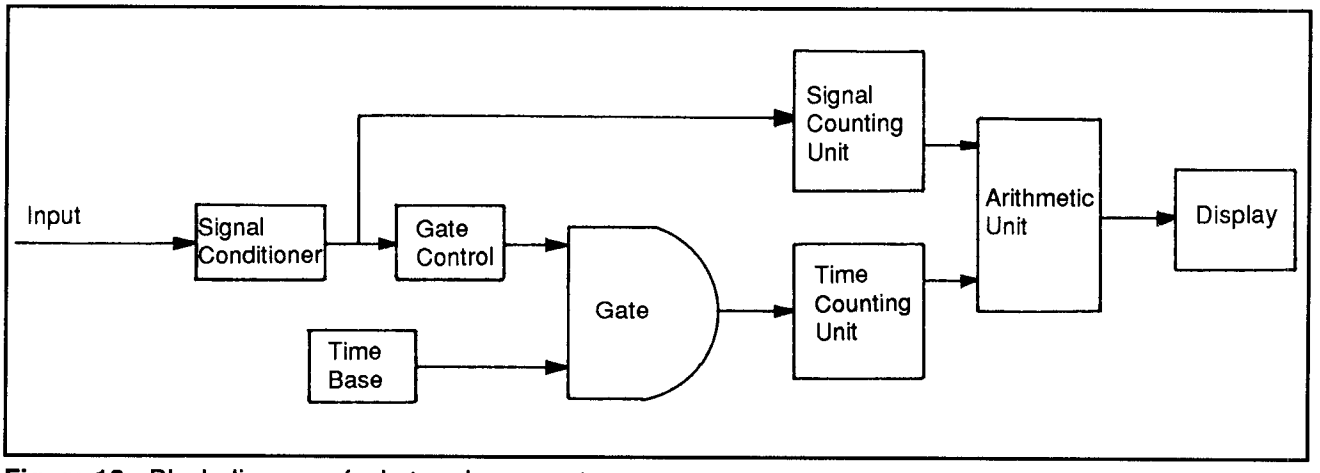

Figure 10: Block diagram of a heterodyne counter

However, by gating the time base with the input signal, low frequencies can be counted.

A reciprocating gated counter uses an arithmetic unit to count and calculate. The reciprocal is displayed as a MHz scale. If a count of 1,000 was made, the display would show 0.001 MHz or an actual frequency of 1kHz.

Another method for measuring low frequencies is by using a phase-locked loop circuit to multiply the frequency of the input signal. The output frequency from the voltage-controlled oscillator is proportional to the input frequency.

It should be noted that frequency counters are not usually made of just one circuit but are more often made from several. Average counters can measure up to 500 MHz, and use combinations of direct-gated and either the reciprocating-gated or multiplying methods. Counters measuring higher frequencies will use these combinations and additional methods. The front panel of a counter determines which circuits are used for what frequencies, with inputs for separate low and high frequencies. When using counters, it is best to know the limitations and counter specifications.

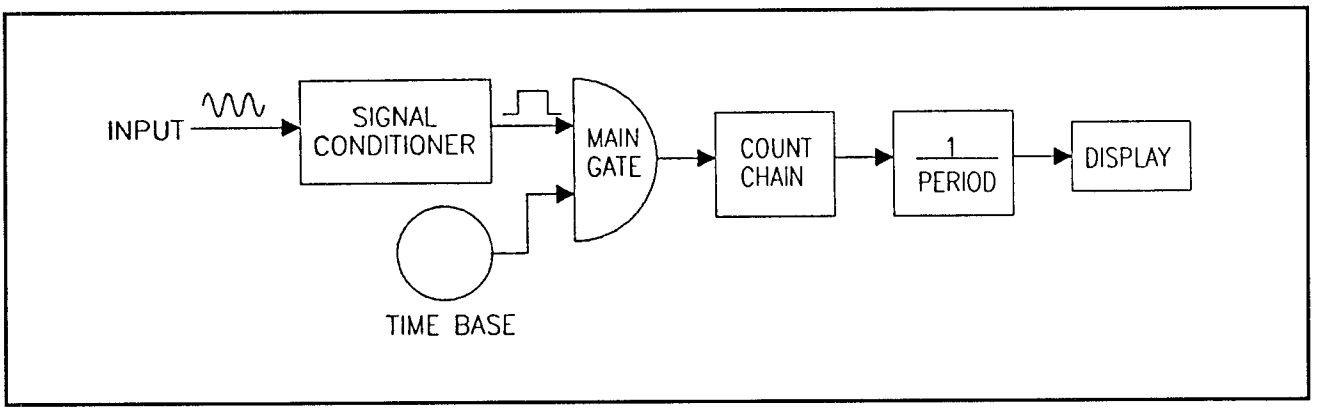

Figure 2: Reciprocal frequency counter

shows an HP 53131A universal frequency counter.

Time Base Considerations

In a direct frequency counter, the time base is the reference for the gate interval over which the signal is counted. In a reciprocal counter, the time base is counted over one cycle of the input signal. Any error or uncertainty in the time base frequency will be reflected in the accuracy of the counter measurement. Thus it is important to be familiar with the different types of time base oscillators available, and the basic characteristics of the oscillators that affect accuracy.

There are three main types of crystal oscillators used in counters: room temperature crystal oscillator (RTXO); temperature compensated crystal oscillator (TCXO); and oven controlled crystal oscillator. The vast majority of counters use one of these quartz crystal oscillators as time bases.

Room temperature crystal oscillators are manufactured to minimize frequency change with temperature. The temperature compensated crystal oscillator adds components that compensate for the crystal's change in frequency due to temperature.

Temperature controlled crystal oscillators are typically an order of magnitude more stable than RTXOs.

The most stable type of oscillator available is the oven controlled crystal oscillator. This crystal is housed in a temperature controlled oven, which minimizes temperature changes in the crystal. Most counters that offer oven

controlled oscillators feature proportional ovens, which provide heating proportionally. A PWM (Pulse Width Modulator) is typically used here to dole out energy (heat) on an "as required" basis by varying the pulse width, which, in turn, controls the heat.

Other Factors

In addition to temperature effects, several other factors affect the frequency accuracy of a crystal oscillator. These factors include: line voltage variation, aging rate or long term stability, short term stability, magnetic and gravitational fields, and various environmental factors (see Figure 4).

Any variations in the voltage applied to the oscillator, or its associated circuitry, causes variations in the oscillator frequency. The magnitude of this variation is determined by the effectiveness of the voltage regulators in the frequency counter. Regulation that provides a voltage change of less than ±10% is typically sufficient; better regulation is superfluous since any further improvements in line voltage stability would be minor in comparison with frequency variations due to temperature effects.

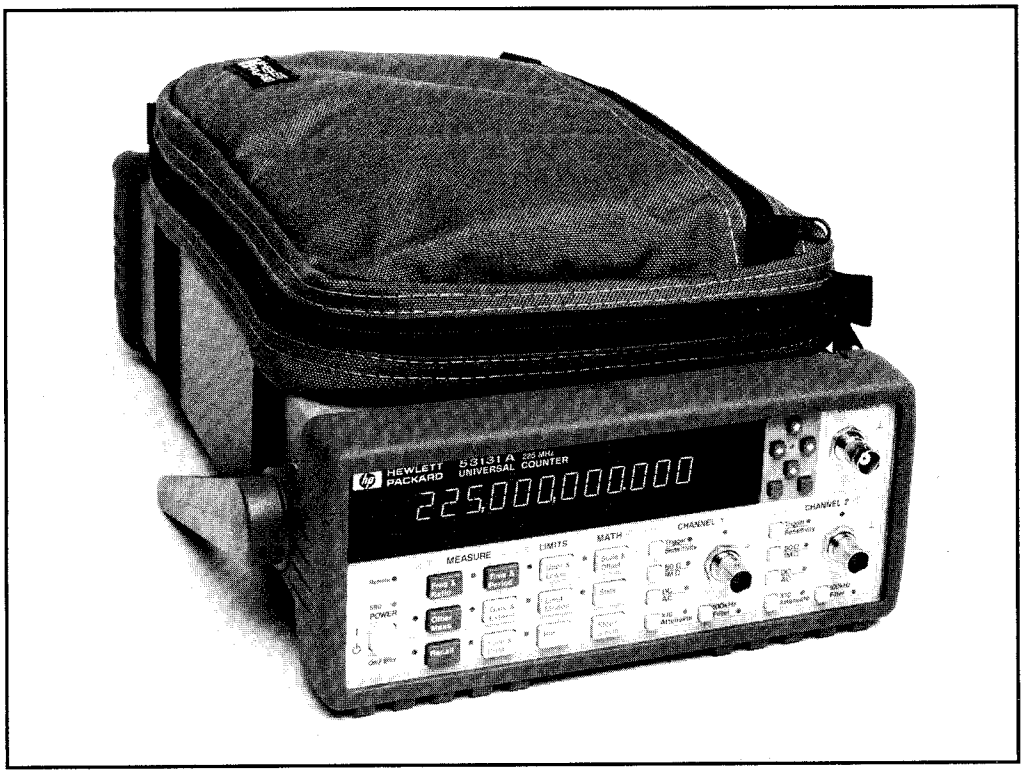

Figure 3: A typical universal frequency counter, the HP 53131A

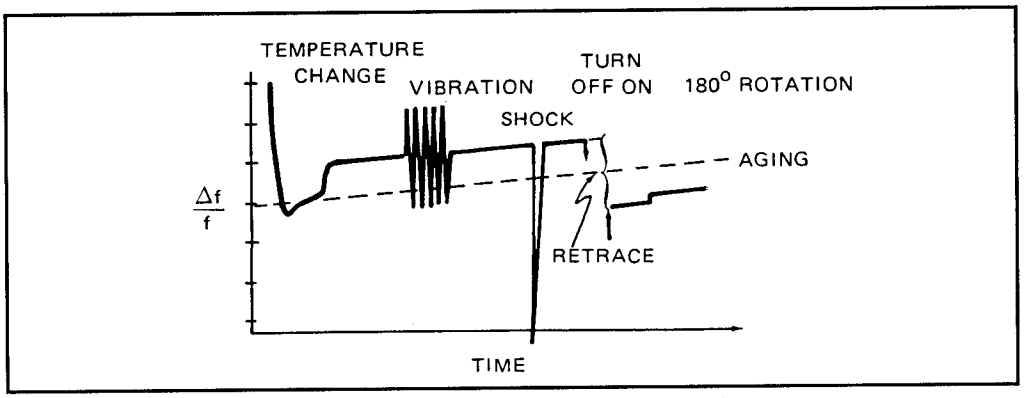

Figure 4: Physical environmental influences on a crystal

Aging rate refers to the gradual cumulative frequency drift occurring in a crystal over time (see Figure 5). Aging rate depends on the quality of the crystal used, and is typically specified in terms of frequency change per month.

Short term stability, also known as fractional frequency deviation, refers to the random frequency and phase fluctuations in the oscillator output. The specification of short term stability is incomplete without an indication of the measurement, or averaging, time. The short term stability indicates the uncertainty due to noise in the oscillator frequency over the specified time period.

Down Conversion Techniques

For the most part, counters can directly count frequencies only as high as 500 MHz. The direct-count frequency range is fundamentally limited by the speed of the counter's logic circuitry. With continuing advances in high-speed logic ICs, including gallium arsenide (GaAs), frequencies somewhat higher than 2 GHz are now measurable by direct counters. At present, however, you need to use some form of down-conversion for frequency counting above about 2.5 GHz. The three basic techniques used for down conversion are: *prescaling*, with a maximum frequency range of approximately 3 GHz; the *transfer oscillator*, used in the 20 GHz region; and the *heterodyne converter*, sometimes called harmonic heterodyne converter, which is currently used to measure frequencies as high as 170 GHz.

Users of microwave frequency counters must look to one of these forms of down conversion to extend frequency measurements beyond the 2.5 GHz limit, which falls just short of the lower end of microwave frequencies — 3 GHz. The

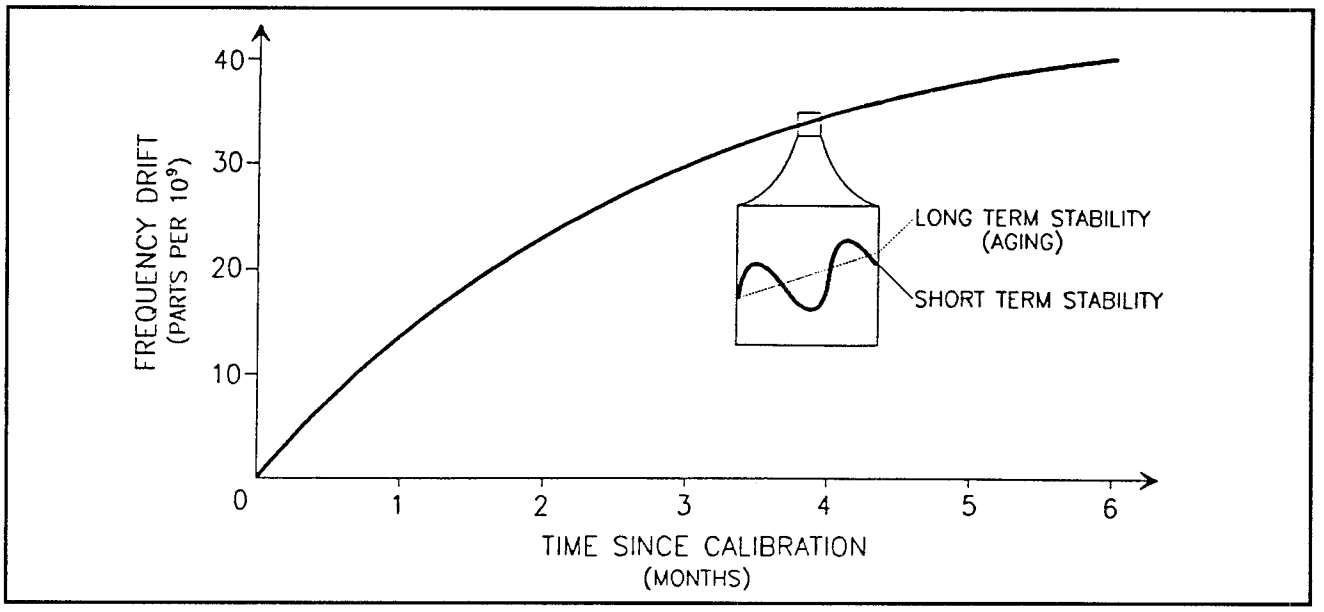

Figure 5: A crystal's aging rate

wavelength at 3 GHz is 1 mm, which is the commonly accepted frequency threshold where microwave technology begins. Beyond 3 GHz the wavelength drops below 1 mm.

Prescaling

Prescaling involves simple division of the input frequency, resulting in a lower frequency signal that can be counted in digital circuitry. The frequency measured by the counter section is related to the input simply by the integer N. A display of the correct frequency is accomplished either by multiplying the counter's contents by N or by increasing the counter's gate time by a factor of N. Typically, N ranges from 2 to 16.

Figure 6 shows the block diagram of a high frequency counter using prescaling as its down conversion technique. The input signal is conditioned to interact correctly with the prescaling circuit. It is divided by N before entering the main gate. Beyond this, the block diagram looks like a conventional counter, with the main gate being opened and closed (by the main gate flip-flop) in timing precisely determined by the crystal time base of the instrument. The counter now accumulates the under 500 MHz frequency measurement, which is multiplied by N and transmitted to the display.

Modern frequency counters using this technique are capable of measuring above

1.0 GHz. Recent developments in solid-state technology promise to extend this range into the low microwave range in the near future.

Transfer Oscillator

The transfer oscillator uses the technique of phase locking a low frequency oscillator to the microwave input signal (see Figure 7). The low frequency oscillator can then be measured in a conventional counter, and all that remains to be accomplished is to determine the harmonic relationship between that frequency and the input.

The transfer oscillator technique phase locks a harmonic, N, of a low frequency local oscillator (L.O.) to the incoming signal. By phase locking the L.O., its frequency is locked at f_x / N, which may be directly counted. In other words, the incoming frequency is divided and "transferred" to a low frequency oscillator, which may be directly counted. All that remains is to determine the harmonic relationship between the low frequency oscillator and the input frequency, that is, determine N. This is accomplished by mixing the input signal with a harmonic of the low frequency oscillator offset by a fixed value, f_o. The ratio of the resultant IF to the fixed offset frequency is the harmonic number. The gate time then may be extended by the harmonic number to determine the input frequency.

Heterodyne Conversion

Heterodyne down conversion centers about a mixer that beats the incoming microwave frequency against a high stability local oscillator signal (see Figure 8). This results in a difference frequency that is well within a conventional counter's 500 MHz to 2.5 GHz bandwidth.

The local oscillator signal is generated in several ways. One basic technique is depicted in Figure 9. The L.O. signal is derived using an oscillator whose output

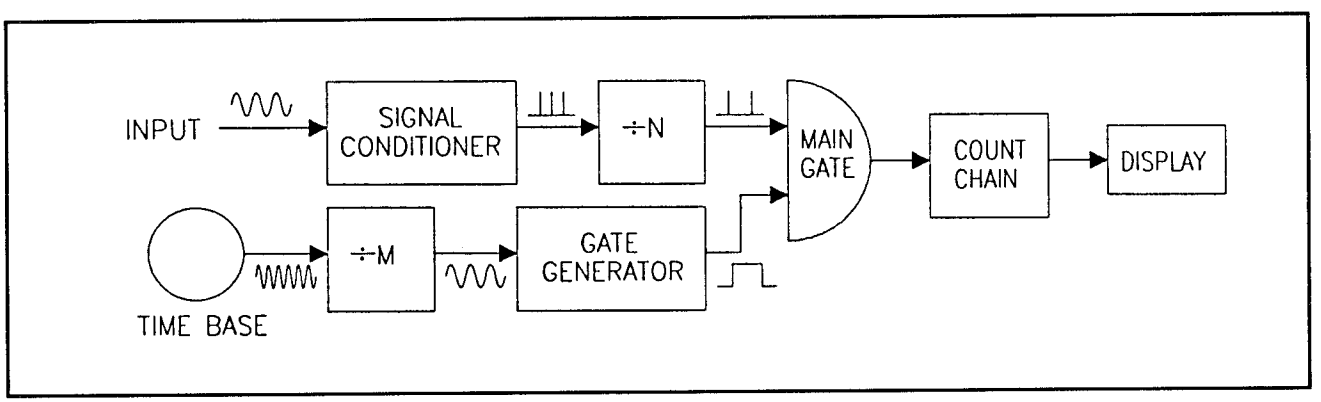

Figure 6: High frequency counter using prescaling

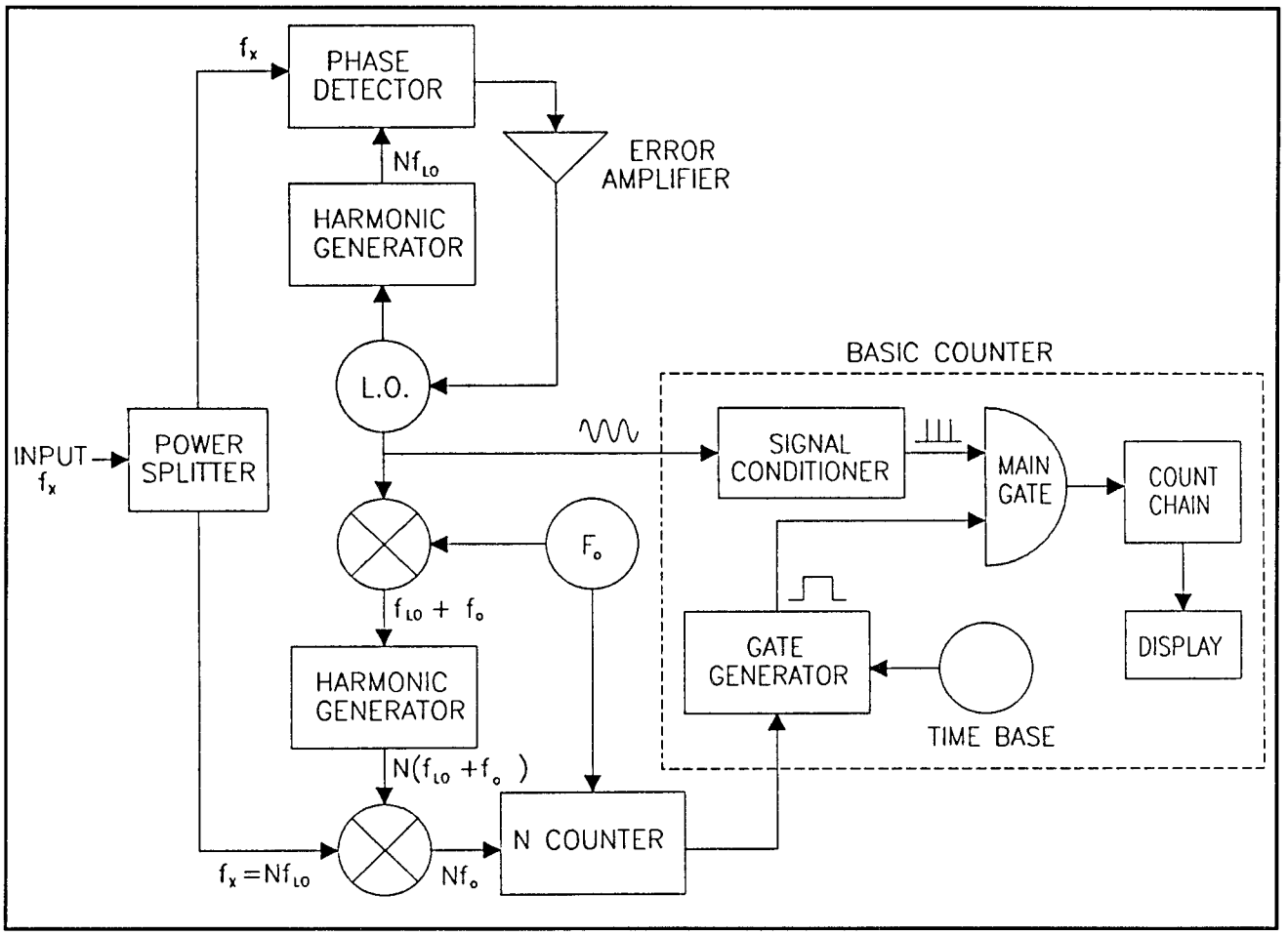

Figure 7: A transfer oscillator

is directed to a harmonic generator. The output of the harmonic generator is a "comb" of frequencies, one line of which is used to down-convert the incoming signal in the mixer.

Harmonic Mixer

Sometimes a harmonic mixer or sampler is used rather than a comb generator and mixer, but the net effect is the same. By sweeping the frequency of the oscillator, the comb spectrum may be varied until the signal detection circuit indicates that an IF (intermediate frequency) is present. Once an IF is found, the counter terminates its acquisition routine and begins its measurement routine.

The measurement routine involves the determination of the RF input signal's

frequency. The theory is relatively simple. In mathematical terms, the unknown frequency is equal to a harmonic of the local oscillator frequency plus or minus the IF:

$$f_x = (Nf_{LO} \pm f_{IF})$$

The IF is counted directly by the basic 500 MHz direct counter. In order to find the unknown frequency, the following terms must be known: the comb line frequency (or harmonic number) N and the sign of the IF. For example, let's suppose the L.O. frequency is 400 MHz and the IF frequency is 125 MHz. To find the input frequency, it is necessary to determine: 1) Which harmonic of the L.O. frequency is producing the IF that is being counted; and 2) Whether the IF should be added or subtracted. The answers to both questions may be found by stepping the L.O. frequency.

$$N = (\Delta IF) / (\Delta LO) = 17/1 = 17$$
$$f = (17)(400\ MHz) - 125\ MHz = 6.675\ GHz$$

Refer to Figure 10. If a change of 1 MHz in the L.O. frequency moves the IF by 16 MHz, the desired harmonic is the 16th; if the change is 17 MHz, the harmonic is the 17th, and so on.

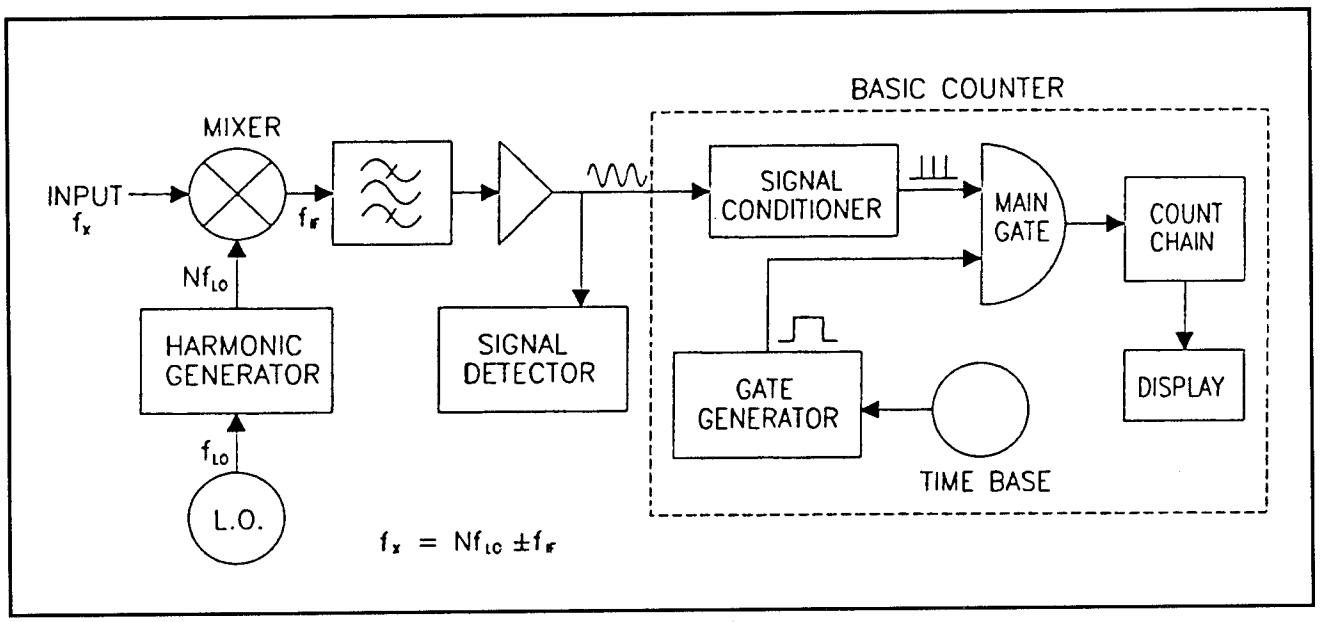

Figure 8: A heterodyne converter (harmonic heterodyne)

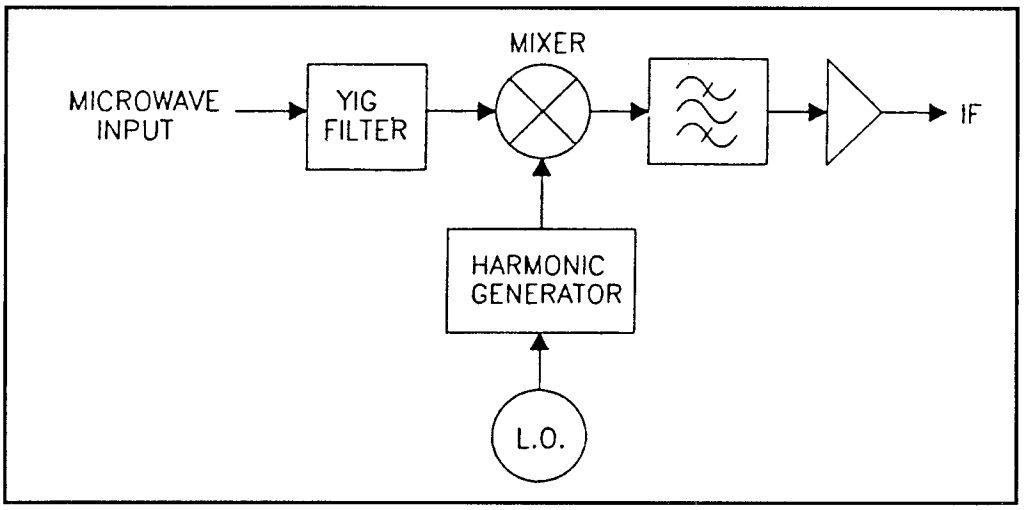

Figure 9: A microwave converter

Whether the IF should be added or subtracted depends on the way the received IF moves in relation to the change in the L.O. frequency. Suppose a 1 MHz change in the L.O. increases the IF by 17 MHz. Obviously, this identifies the harmonic as the 17th (6.8 GHz). Such a change also shows that the unknown frequency is lower than 6.8 GHz. In other words, the difference between the 17th harmonic and the unknown frequency is the IF. As the L.O. frequency (and hence its 17th harmonic) increases, and the unknown remains the same, the difference between the two signals increases. The IF also increases. An increasing IF indicates a minus sign and a decreasing IF indicates a plus sign. This resolves the ambiguity in the sign of the IF.

Automated Measurements

In our example, the unknown frequency is equal to 17, the harmonic number, times 400 MHz, the L.O. frequency, minus 125 MHz, the IF, or 6.675 GHz. One feature of the harmonic heterodyne method is that it is easily adapted to automated measurements. Virtually all current CW (Continuous Wave) and pulse counters use this heterodyne process, with an internal microprocessor performing all the work.

Accuracy of Microwave Counter Measurements

The accuracy of microwave counter measurements is limited by two factors: The plus/minus one-count quantization error; and time base errors. Time base errors may further be looked at in two different ways: short-term stability, which generally limits the repeatability from one measurement to the next; and long-

term stability, which limits the absolute accuracy of a measurement.

Temperature Fluctuations

In a typical user environment, a counter's accuracy capabilities will be masked by the effects of temperature fluctuations on the time base (crystal). It is best to carefully examine temperature stability specifications before attempting high precision measurements with a microwave counter.

Assuming a stable temperature environment exists, let's compare the short-term stability (repeatability) of microwave measurements. Figure 11 illustrates this comparison. For a gate time of one second, it is clear that the transfer oscillator is limited to about 1×10^{-8} resolution. The heterodyne and harmonic heterodyne converters are limited to about 1×10^{-9}, where short-term instabilities of common crystal oscillators become the limiting factor. With the high stability of an oven oscillator, these two converters are capable of resolving 1×10^{-10} at microwave frequencies.

Of considerably more importance, however, are the long-term effects that limit the accuracy of microwave counter measurements. Figure 12 graphs the combined effects of inaccuracies due to time base aging and the ±1 count uncertainty. In this figure it is assumed that the time base was calibrated to a high degree of accuracy one month ago. Clearly, even with the best time bases available, the long-term instability of the time base becomes the accuracy limitation, no matter

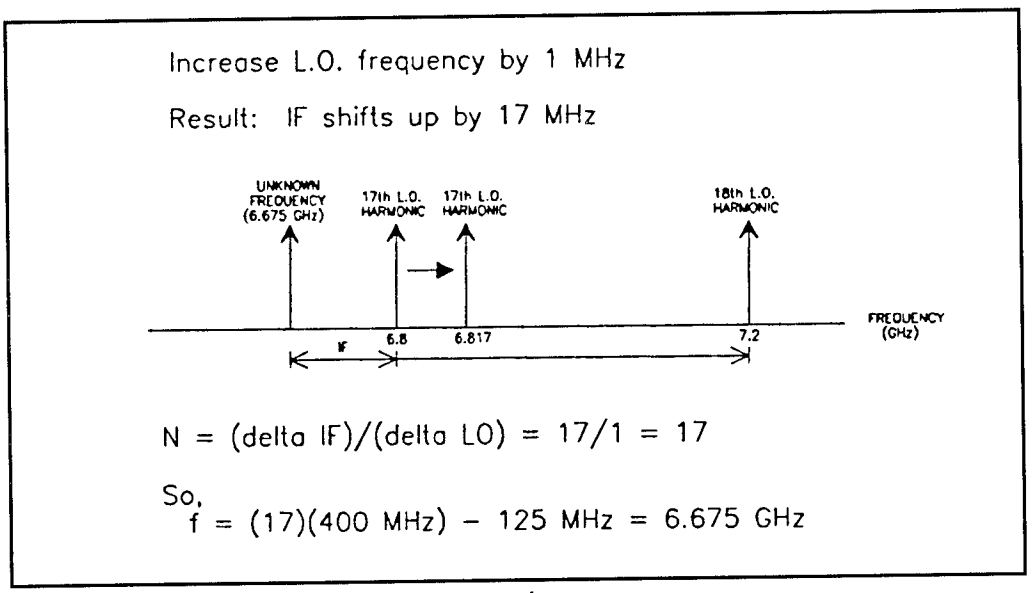

Figure 10: Heterodyne converter example

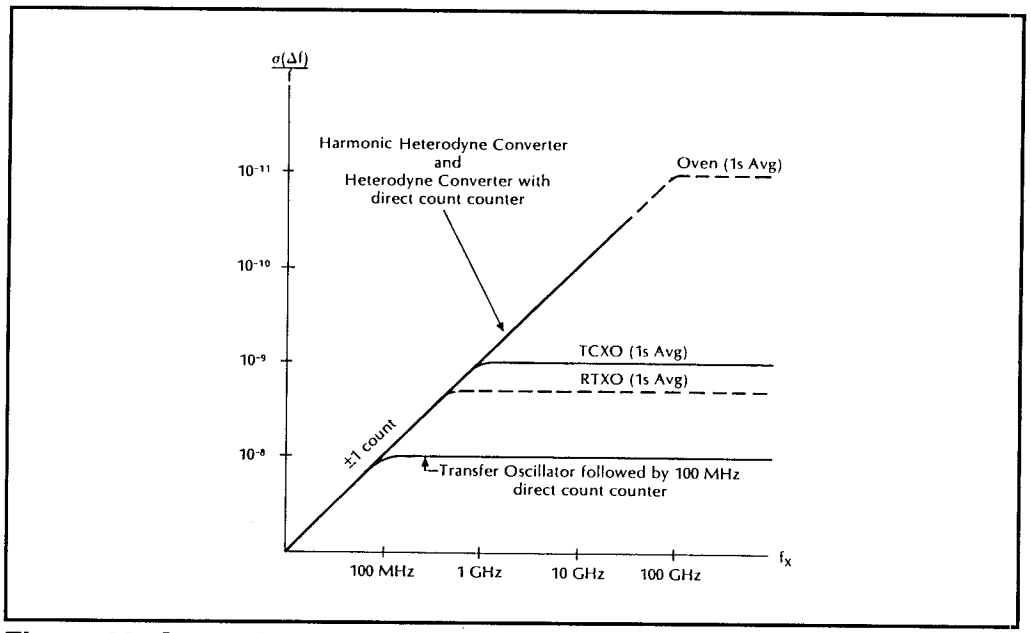

Figure 11: Comparing down converter techniques for oscillator accuracy and frequency

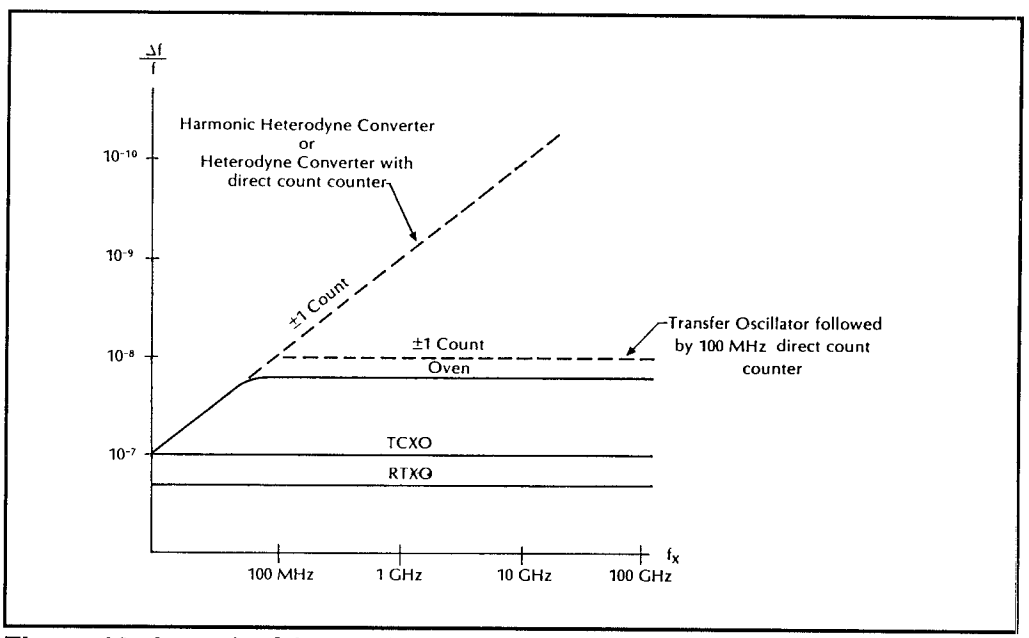

Figure 12: A graph of the combined effects of time base aging and the ±1 count uncertainty

which down conversion technique is used.

Time base error results from a frequency error in the time base reference oscillator. The time base error is proportional to the reference oscillator frequency error, and is expressed as a fractional error.

To get a feel for the magnitude of the measurement uncertainty due to time base error, let's consider the following example. Assuming we're using a counter with a 10 MHz TCXO time base, aging at its specified aging rate of one hundred parts per billion per month (worst-case condition), and that the time base has not been calibrated for one year, let's see what the error will be. The worst-case frequency error is the sum of the individual errors — aging rate, short term stability, temperature stability, and line voltage variation. Remember, aging rate is a constant frequency drift beginning immediately after the time base is calibrated. It continues until the time base is re-calibrated; so we multiply the aging rate by the time since the time base was last calibrated. The worst-case frequency error after one year is 6.701 parts per million, or 67.01 Hz on a 10 MHz time base. This is the worst-case frequency error of the time base; however, not of a microwave frequency measurement.

To calculate the worst-case error in a microwave frequency measurement, let's also assume the microwave frequency being measured is 10 GHz. The uncertainty of a 10 GHz frequency measurement will be the same fractional error as the worst-case time base frequency error, that is, 6.701 parts per million. Hence the worst-case error is calculated to be 67.01 kHz. This is the uncertainty in a 10 GHz frequency measurement due to the time base.

As was just shown, a frequency error in the internal time base oscillator results in the same percentage error in the frequency reading. Measurement errors caused by time base accuracy can be reduced by comparing the 10 MHz output on the counter to a standard of known accuracy. The time base frequency can then be corrected by turning an adjustment screw. Another method is to use an external 10 MHz reference instead of the internal time base. This external time base could be a rubidium or cesium beam standard with a known degree of accuracy.

Gate phasing error is caused by the relative timing between the gate and the incoming signal, and results in an uncertainty of ±1 count in the least significant digit. For example, consider the incoming signal. After passing through the signal conditioner, the signal appears at the main gate as a pulse train. Gate A counts two zero-crossings, whereas Gate B counts three.

If you set the resolution of the counter to 1 kHz, the potential error on each gate is ±1 kHz. (In a direct frequency counter, the gate time required is inversely proportional to the desired measurement resolution.) The gate phasing error is inherent to all counter measurements; it is analogous to a ±LSB uncertainty in digital components.

Sensitivity and Dynamic Range

A second key performance criterion for microwave counters is sensitivity. Sensitivity indicates the lowest amplitude signal the counter can measure. A typical sensitivity specification for a good microwave counter is -25 dBm. There is little difference in sensitivity specifications among the different down-conversion techniques we have discussed.

The lower dashed line in Figure 13 indicates the true sensitivity of a typical HP 5340A Frequency Counter, which uses the transfer oscillator technique. The transfer oscillator is capable of exceptional sensitivity since the input signal into the down-converter enters a narrow-band (about 200 kHz) phase lock loop. The counter is therefore relatively insensitive to noise on the input and may be designed for high sensitivity without too much concern for triggering on low-level noise.

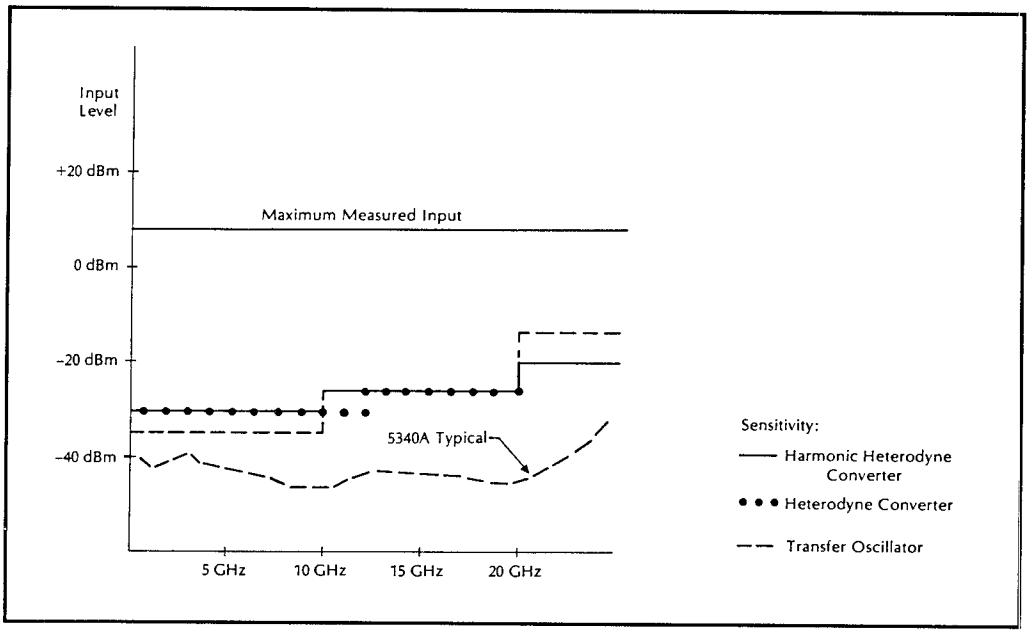

Figure 13: Sensitivity of an HP 5340A Frequency Counter

The dynamic range of a microwave counter is a measure of the separation of the sensitivity specification and the highest level input signal that can be counted reliably. A typical value for this upper level is +7 dBm, which is also graphed in Figure 13. Some microwave counters allow measurements of inputs to +20 dBm and beyond; for example, the HP Model 5341A (Heterodyne Converter) and the HP Model 5342A Option 003 (Harmonic Heterodyne Converter) both measure +20 dBm inputs.

Measurement Speed

A third key specification is speed. Speed is usually determined by a combination of the counter's signal acquisition time and measurement time. Acquisition time is the time it takes the counter to find the signal, and measurement time is the time it takes to count the signal. Acquisition time is the main variable component in a counter's speed, and is dependent upon the down-conversion architecture employed. It ranges from one to a few hundred milliseconds.

A microwave counter using the transfer oscillator technique will typically have an acquisition time of about 150 ms, which is comparable to the heterodyne converter. Gate times for the transfer oscillator are longer since, as with the prescaler, they must be set to N/R in order to effectively multiply the counter's contents by N. This factor of N can cause the transfer oscillator counter to measure much more slowly than the heterodyne converter for high resolution (100 Hz or less) measurements of microwave frequencies. For typical measurements with resolution of 1 kHz or greater, you will not notice the difference in measurement speed between the different techniques.

Measurement time depends on the type of basic counter used, that is, direct or reciprocal. Remember, gate time, the primary component of measurement time, is proportional to the inverse of the measurement resolution in a direct frequency counter. In a reciprocal counter, the gate time is a function of the frequency being measured.

Other Key Criteria

Other key criteria reveal the counter's performance in realistic signal environments, including its ability to handle multiple signals and FM or signal instability. An important consideration in systems is kickback noise, which consists of signals coming out of the counter directed back at the device under test. These signals can interfere with other measuring equipment in the system. Burnout protection indicates the maximum signal level that can be applied to the

counter before damaging the microwave input. Let's examine each of these criteria in more detail.

Multiple Signal Environments

Most microwave frequency counters operate just fine when measuring only one signal. But what happens when there is more than one signal present at the counter's input? Most counters are designed to measure the highest signal. The specification that describes the counter's ability to measure the highest signal in the presence of other lower signals is amplitude discrimination. An amplitude discrimination specification of 10 dB, for instance, means that the highest signal must be 10 dB above all other signals in order to guarantee proper counter operation.

All modern microwave counters incorporate amplitude discrimination in their designs. This capability is one of the key features of the transfer oscillator and harmonic heterodyne converter. These counters are typically capable of always finding the most prominent component of the spectrum, provided it is at least 2 dB above nearby signals and at least 10 dB above signals at the far end of the counter's frequency range (see Figure 14).

What if you want to measure a signal that is not the highest signal present at the counter's input? In other words, what if the spectrum looks like Figure 15, and

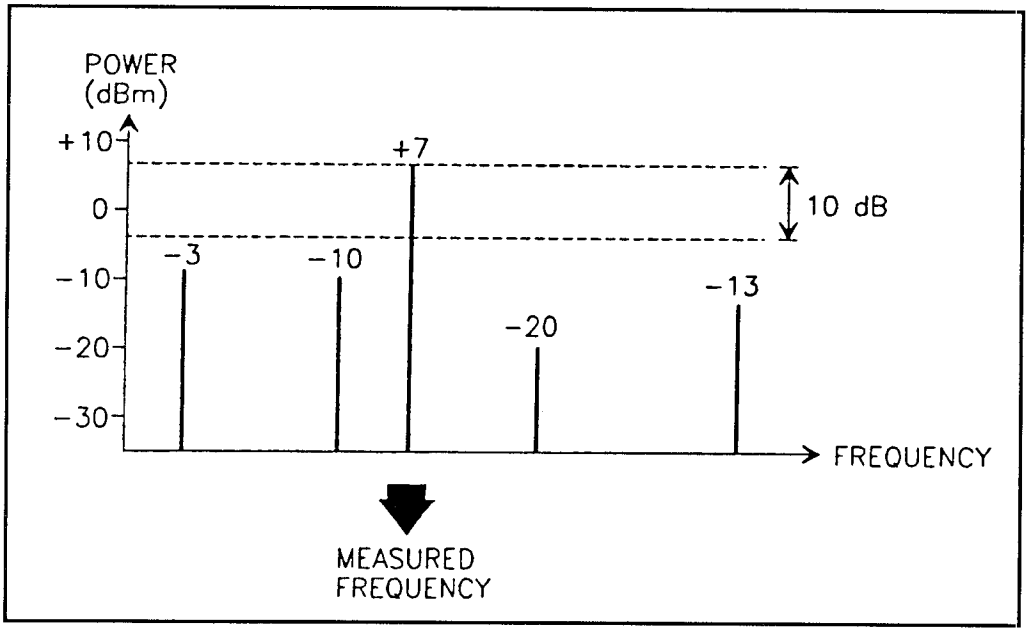

Figure 14: Amplitude discrimination in multiple signal environments

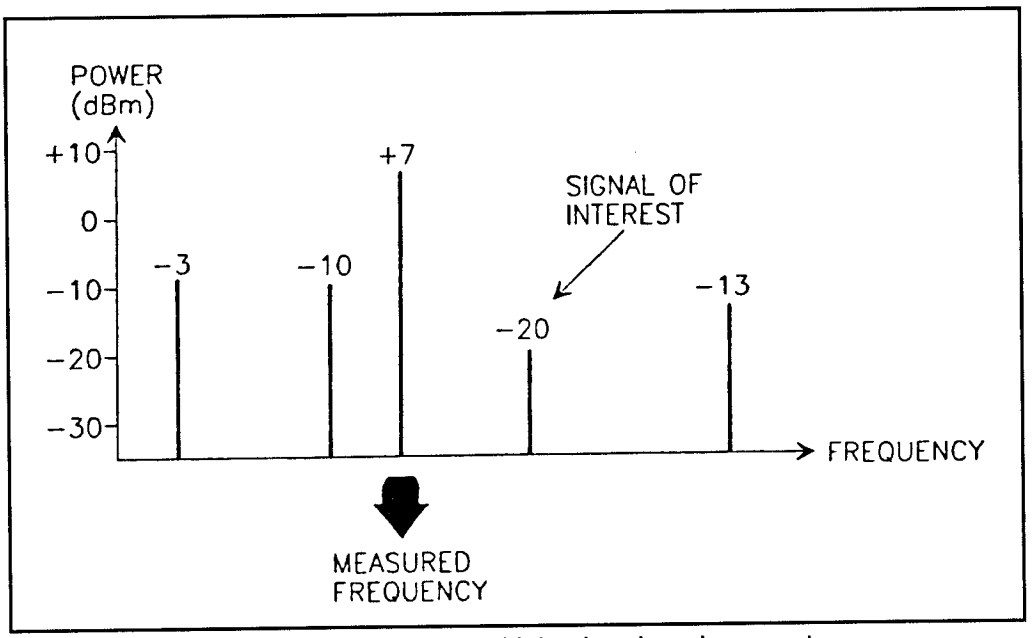

Figure 15: Frequency selectivity in multiple signal environments

the -20 dBm signal is the signal you are interested in measuring? Most microwave counters are designed to measure only the highest amplitude signal, and are not able to measure a lower signal in the presence of other higher signals. Some counters are able to selectively measure lower signals in the presence of higher ones.

When the signal environment does not conform to the counter's amplitude discrimination specifications, they are subject to miscounts. Miscounts are erroneous frequency readings not corresponding to real signals. They result from the counter's inability to resolve signal amplitudes, causing some counters to give false readings. Miscounts are the result of pushing the counter beyond its amplitude discrimination specification.

AM Tolerance

A form of modulation encountered during microwave measurements is amplitude modulation (AM). Few microwave radios use AM for communications transmissions, but nearly all microwave sources provide signals with incidental AM. In many R&D and maintenance environments a time-varying attenuation of the signal is common.

The heterodyne converter's tolerance to amplitude modulation is limited by its

AGC circuitry when such a circuit is used in the counter design. If the signal amplitude at the input varies due to AM, it is possible the AGC circuitry is unable to track the changing level and prevents operation of the counter. A practical limitation of AM tolerance for the heterodyne converter is less than 50% AM.

The transfer oscillator converter suffers no such AM limitations. The only requirement of this type of down converter when measuring an amplitude modulated signal is that the lowest amplitude point of the waveform be strong enough for the counter to continue to measure. For example, the HP 5340A or HP 5342A microwave frequency counters can easily measure a carrier at a level of -10 dBm with 95% AM.

Signal-to-Noise Ratio

An important consideration in choosing a microwave counter is the signal-to-noise (S/N) environment of the measurement. The apparent amplifier bandwidth at the counter's input limits the amount of noise the counter can tolerate on the measured signal.

Consider a microwave frequency to be measured that has a good deal of noise surrounding the carrier as shown in Figure 16a. A transfer oscillator can measure the signal if the peak carrier exceeds the noise floor by 20 dB. A typical heterodyne converter counter, however, requires 40 dB or greater separation to allow accurate measurement.

A common situation wherein broadband noise surrounds a signal to be measured is in the monitoring of solid state microwave sources. Figure 16b shows the typical output of a solid state sweeper. With this type of spectrum to be measured, a transfer oscillator provides reliable readings up to the maximum sweeper

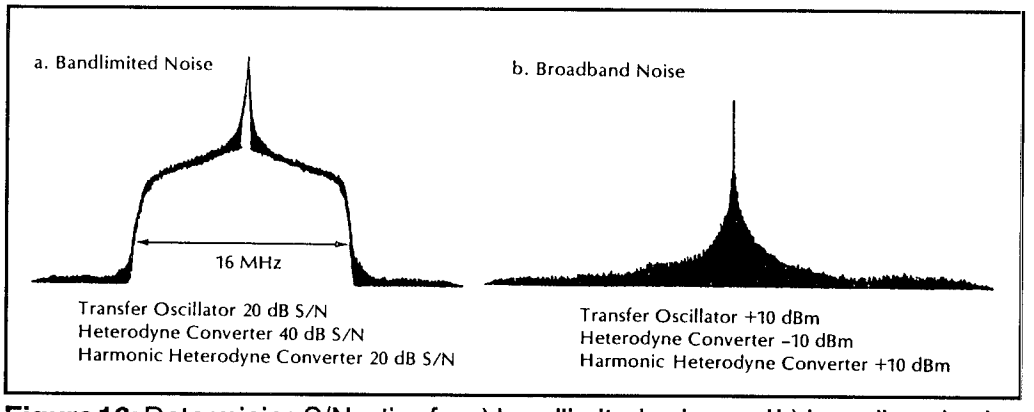

Figure 16: Determining S/N ratios for a) bandlimited noise and b) broadband noise

output power (about +10 dBm). The typical heterodyne converter counter will encounter noise interference at sweeper output levels near -10 dBm.

FM Tolerance

FM tolerance is the counter's ability to measure a carrier in the presence of intentional or incidental frequency modulation (see Figure 17). The most common application is the measurement of a frequency modulated microwave communications carrier. It is desired to measure the carrier without discontinuing the broadcast, that is, without suppressing the information being transmitted in the modulation. The counter must be able to tolerate the FM during frequency measurement. But, remember, the L.O. was stepped to determine the harmonic number and sign of the IF during signal measurement. What happens if the signal is moving while the L.O. is being stepped? Obviously, the counter can become very confused.

Generally, high rates of FM (relative to the amount of time required to step the L.O.) are not a problem; the fluctuations in frequency tend to be averaged out over the gate time. Low rates of FM, however, can be a source of difficulty for many standard counters. This is because the shift in the IF from stepping the L.O. will be due both to the L.O. shift and the FM. For even lower rates of FM, the counter may end up "chasing" the signal rather than measuring the carrier frequency.

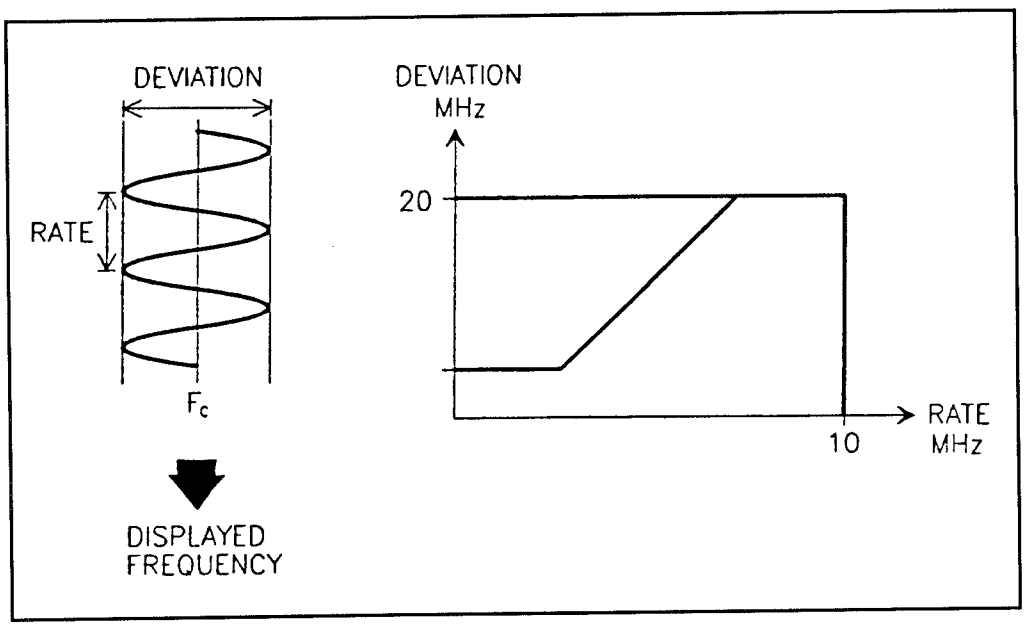

Figure 17: FM Tolerance

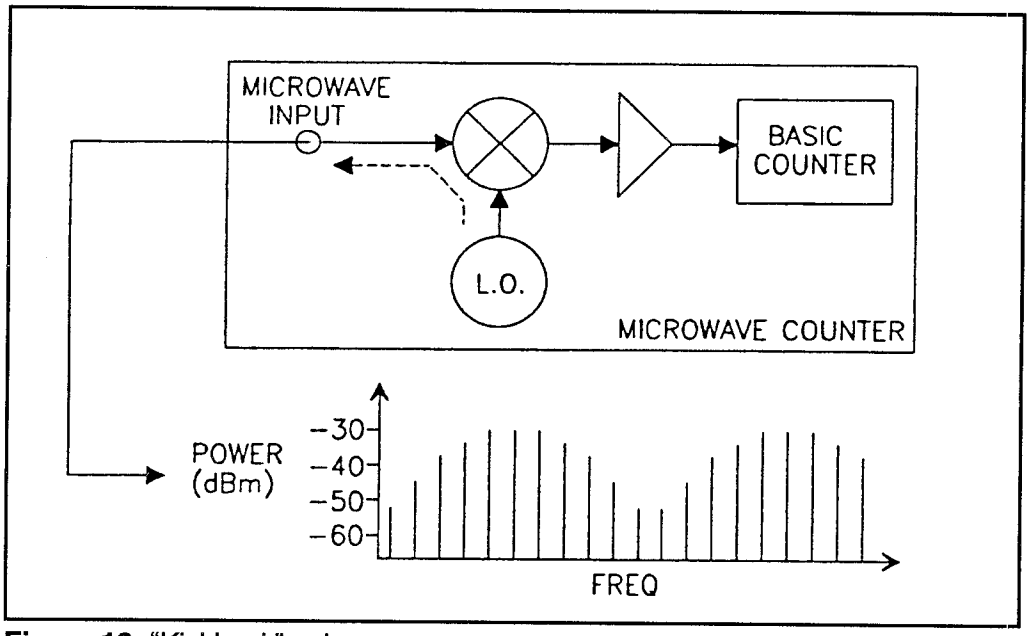

Figure 18: "Kickback" noise

Many counters require the use of special modes to handle these problems, which can severely increase the acquisition time (especially for signals with low rates of FM). To properly use the special modes, the signal characteristics (rate of FM) must be known.

All modern microwave counters can measure modern microwave sources with their inherent incidental frequency modulation. There are applications, however, in which you may want to measure a microwave communications carrier with frequency modulation present. In these cases the FM tolerance of microwave counters becomes a consideration for choosing the appropriate instrument.

"Kickback" Noise

Microwave "kickback" noise refers to signals coming out of the counter directed back at the device under test (see Figure 18). These signals are actually the L.O. comb line, leaking across the mixer and back out through the counter's input. In some applications, particularly low level measurements, kickback noise can be important. It can interfere with other sensitive measuring devices, like receivers, that are also connected to the device being tested. Kickback noise can be as high as -30 dBm in some counters. Once again, some counter manufacturers need to use special modes to "quiet" the L.O., usually by turning it off. Unfortunately, when the L.O. is turned off, the counter can no longer count.

Burnout Protection

Burnout protection is the counter's ability to withstand the accidental application of a high level signal (see Figure 19). This protection is especially important in high signal level environments, where it can guard the counter against damage, and thereby reduce downtime and repair expense. Most counter manufacturers offer special options to enhance burnout protection. These come at the expense of both extra cost and degraded sensitivity.

Special Modes or Options

Many counters use special modes or options, intended to overcome some of the counters' performance limitations. These limitations are a direct result of the architecture employed to down-convert and measure the RF signal. Manufacturers typically use one of several modes depending upon whether the signal has high or low rates of FM, or is moving at some particular speed. Special modes are also used to handle problems with kickback noise and multiple signal environments.

The key to solving many of the limitations of a microwave counter is a YIG preselector (see Figure 20). The input signal (0.95 GHz to 26.5 GHz) passes through this YIG preselector before being down-converted. The preselector is an electronically tunable bandpass filter with an operating frequency proportional to its tuning current. This filter is critical to maximum performance in that it determines the approximate frequency of the input signal (and hence the

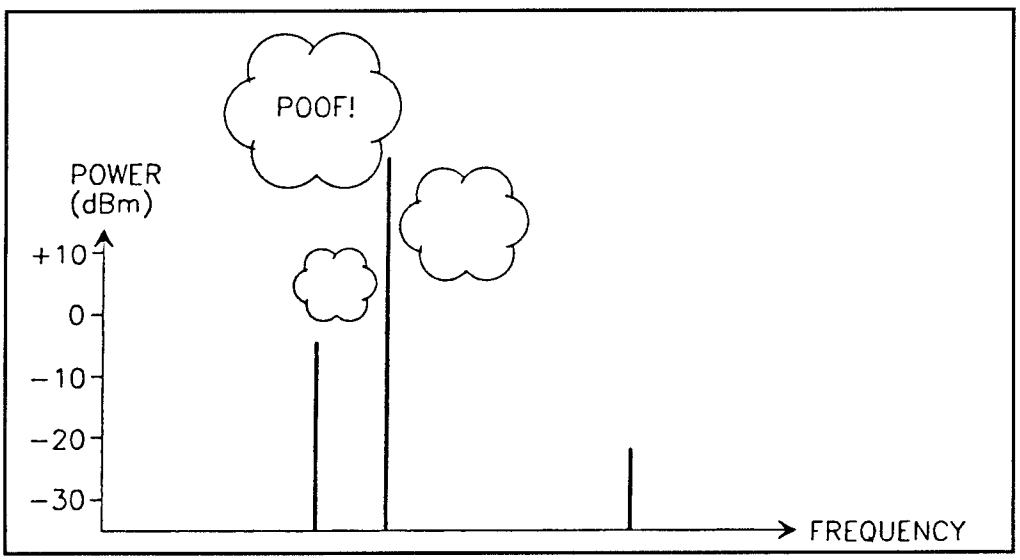

Figure 19: Burnout protection

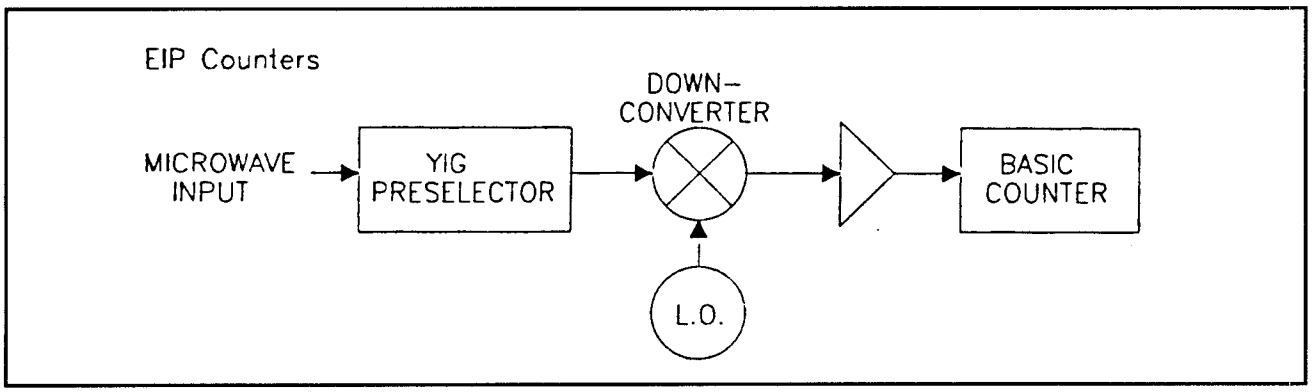

Figure 20: A YIG preselector is used to overcome some of the problems faced by microwave counters

harmonic number and sign of the IF), thereby eliminating the need to step the L.O. Figure 21 shows an EIP model 25B CW microwave frequency counter which uses a YIG filter.

Removing the requirement to step the L.O. gives the counter excellent FM tolerance, and allows it to track fast or slow moving signals without the use of all sorts of unusual modes. The preselector also filters out any undesired signals, making it possible to count a signal at one frequency even if a larger amplitude signal is present at another frequency. This is not possible with a "wide-open," non-YIG preselected counter.

What is a YIG? Yttrium Iron Garnet (YIG) is a ferrite that resonates at microwave frequencies when immersed in a magnetic field. Since this resonance is directly proportional to the applied magnetic field, very linear tuning can be achieved by changing the magnetic field with an electric current.

The YIG filter shown in Figure 22 is a simplified illustration of a single stage bandpass filter. As shown in Figure 23, the RF input and output circuits are comprised of two semi-circular coupling loops located orthogonally (90°) around a 0.015" D YIG sphere held in a fixed position by a supporting rod. Figure 24 shows that the assembly is positioned between the two pole pieces of an electromagnet. Incoming RF energy must be at a proper frequency to activate the electron precession of the YIG sphere in order to transfer energy magnetically from input to output loops. The coupling, or resonant frequency, is determined by the applied magnetic field. The center frequency of the filter can be tuned over a very wide frequency range merely by changing the direct current applied to the electromagnets.

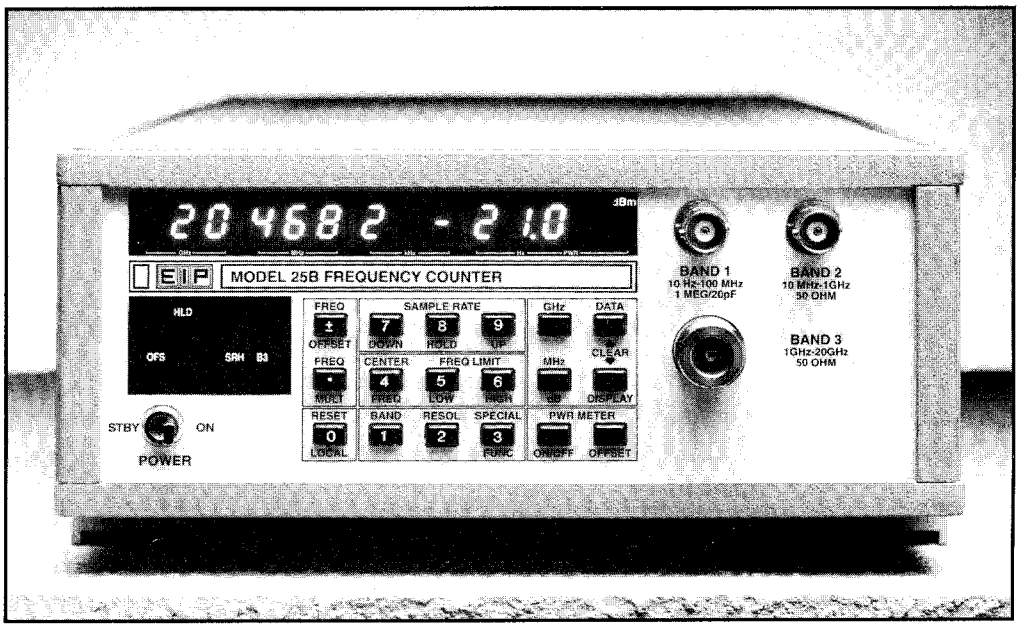

Figure 21: An EIP Model 25B CW microwave frequency counter

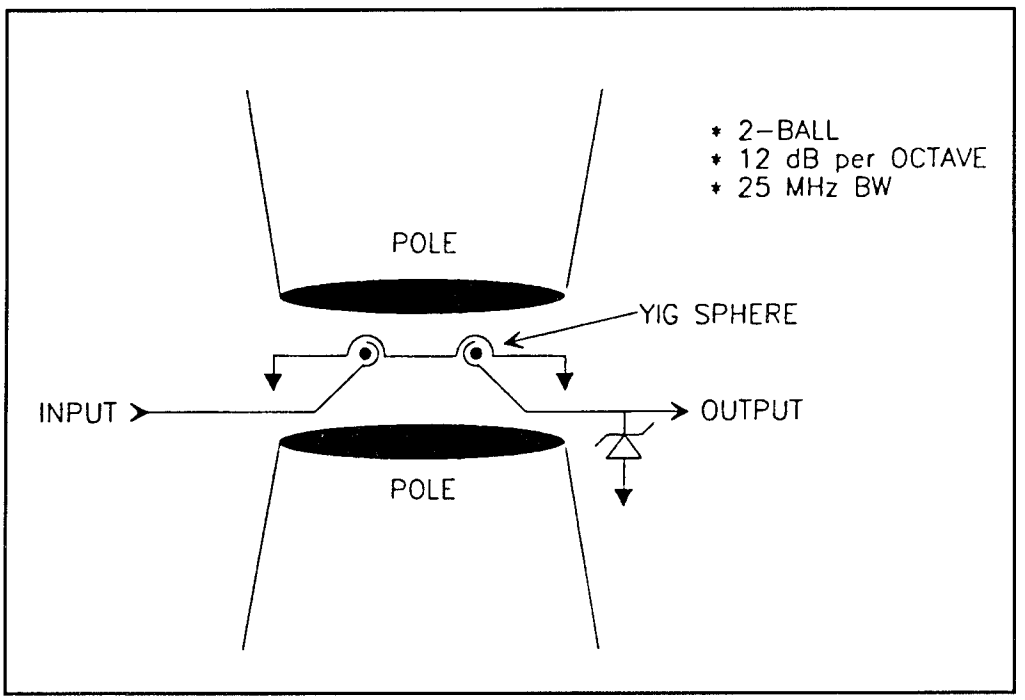

Figure 22: A YIG filter

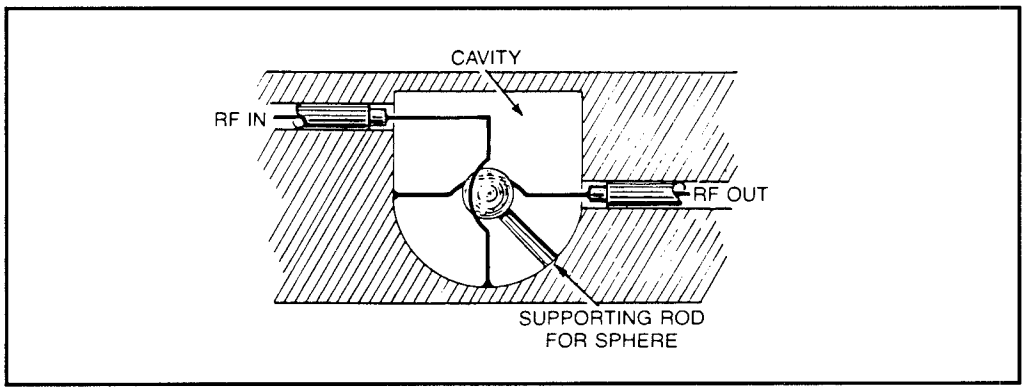

Figure 23: The RF input and output circuits and the YIG sphere

The YIG filter's passband is approximately 25 MHz wide, with a roll-off of 12 dB per octave. The amount of energy that can be coupled across the YIG structure is limited by a mechanism called "premature decline of susceptance," which essentially means that the YIG will pass energy only up to a certain limit. Beyond this point, the YIG will limit the energy passed from its input to its output.

The YIG filter is a natural power limiter, protecting the counter from burnout due to high level signals. Since it is also a filter, the YIG structure prevents kickback noise (L.O. feedthrough) from appearing at the counter's input. Kickback noise is reduced to less than -70 dBm.

The YIG filter can be tuned only at a finite rate, limiting the acquisition time. The filter also imposes an upper limit on the FM deviation that the counter can tolerate: 20 MHz (that is, the bandwidth of the filter). If the deviation of the signal goes outside the YIG passband, the counter will re-initiate its signal acquisition routine.

In addition to high burnout protection, enhanced FM tolerance, and reduced kickback noise, the YIG filter also provides frequency selectivity (see Figure 25). As mentioned earlier, most counters are only capable of counting the highest amplitude signal. Frequency selectivity is the ability of the counter to measure any one of several signals in a multiple signal environment. By tuning the YIG filter over a limited frequency range, smaller signals may be measured even in the presence of larger signals.

This feature, called frequency limits, is made possible by the YIG preselector. It is activated by entering high and low YIG tuning limits on the counter. The

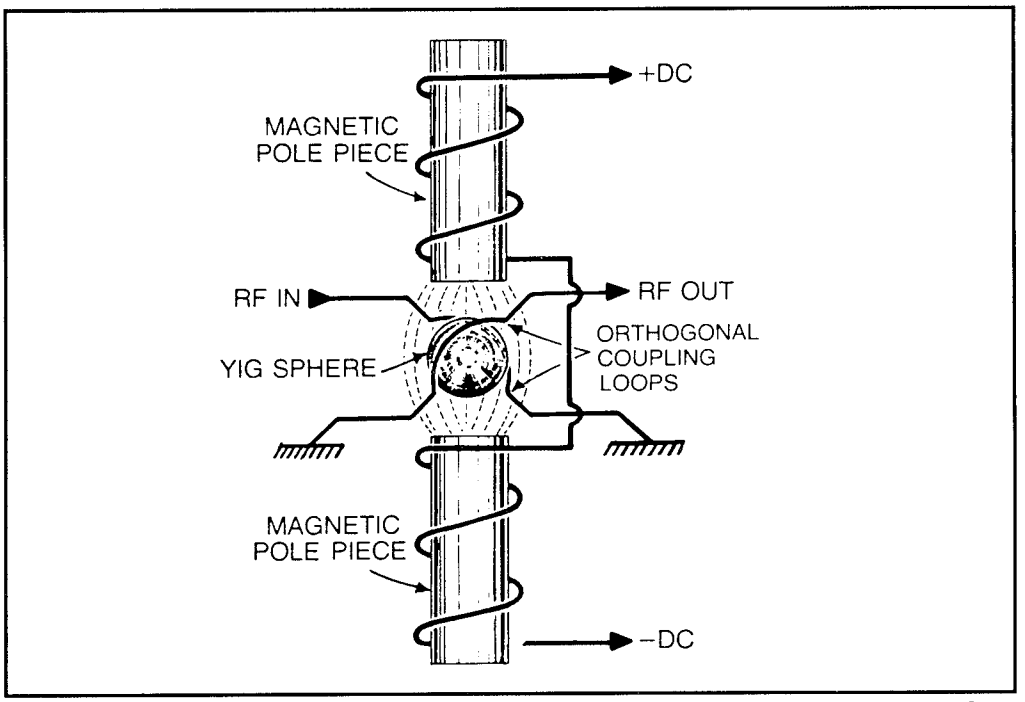

Figure 24: The YIG sphere is positioned between the two pole pieces of an electromagnet

counter searches for signals only between these limits, ignoring all outside signals. In general, unwanted signals should be greater than 100 MHz away from a limit to ensure that the YIG filter will effectively filter them out. For signals that are 10 dB greater than the signal of interest, a separation of 200 MHz is typically required. The use of frequency limits reduces signal acquisition time because it reduces the frequency range over which the YIG must be tuned.

By specifying a reduced tuning range for the YIG filter, the counter selects and measures smaller signals in the presence of larger signals. Even when two signals are closer than allowed by the counter's amplitude discrimination specification, the counter selects and measures only one signal (as long as the signals are separated by greater than 100 MHz.

The YIG filter provides immunity to miscounts and reduces kickback noise, providing burnout protection. Since you don't need to step the L.O. during signal measurement, the YIG allows exceptional FM tolerance at both high and low rates of FM, without the use of restricting modes.

Signal Acquisition Process Using a YIG Filter

During signal acquisition, the local oscillator is turned off and the mixer is used as an RF detector (see Figure 26). The YIG filter is stepped from its low to high limits to search for signals. During this search, the detected RF output is fed to a series of threshold detectors set 4.5 dB apart. After each step, the threshold detectors are checked.

If the detectors are triggered, the approximate amplitude of the signal is stored by a microprocessor. The counter then returns to the search mode to look for any larger signals. After searching the entire frequency range, the counter returns to the largest signal and begins to center the YIG filter precisely on the input frequency.

The "centering" process consists of finding the exact relative power of the signal, then stepping the YIG in 2 MHz steps until four points are found: two on either side of the peak 1.5 dB down from the peak, and two on either side of the peak 4.5 dB down from the peak. From these points, the approximate "center of mass frequency" of the signal is found, and the YIG filter set to that frequency. The "center of mass" algorithm compensates for asymmetries in the YIG filter, and for unusual signal modulations.

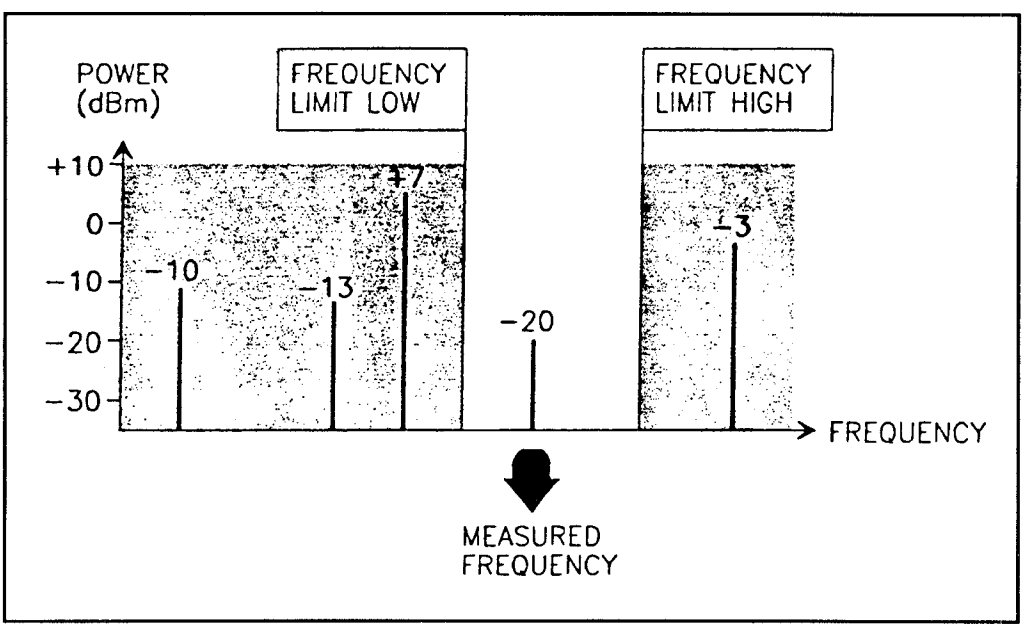

Figure 25: Frequency selectivity of a YIG filter

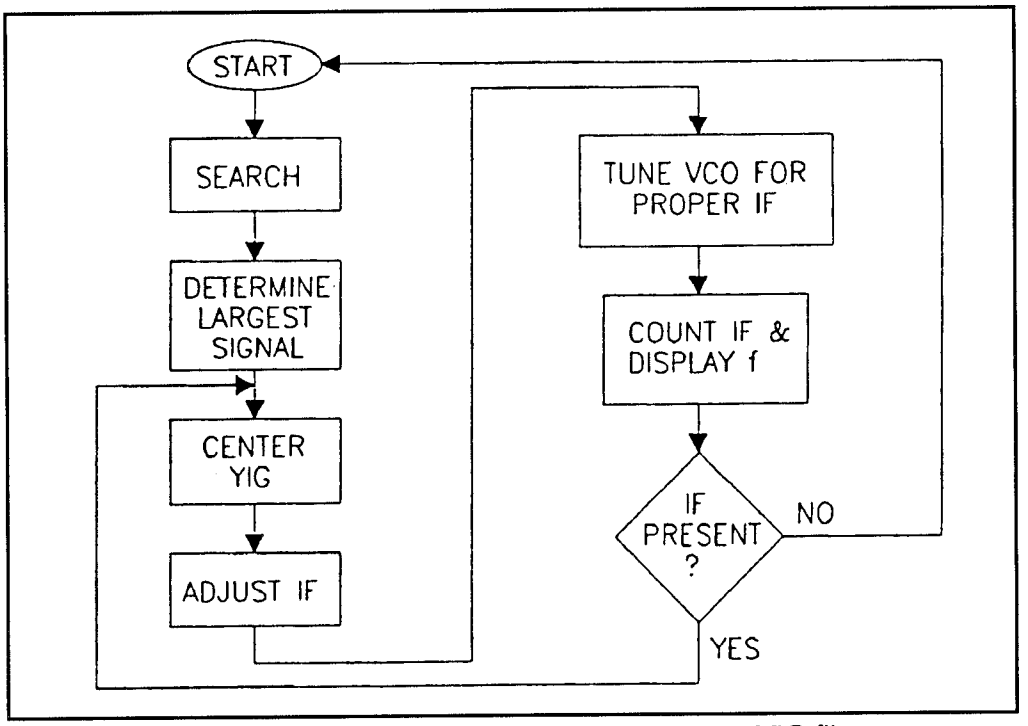

Figure 26: Signal acquisition process of a counter using a YIG filter

After each measurement, the frequency of the IF is checked and, if necessary, the frequencies of the YIG and VCO (L.O.) are adjusted to re-center the signal. This provides rapid tracking of a moving signal without any special mode adjustments.

Applications

Typical applications of microwave frequency counters include VCO linearity testing, carrier frequency measurements, calibration of sweepers, oscillator measurements, and so forth. Remember, architecture impacts counter performance, especially in multiple signal environments and in measurements of modulated signals. Some counters can tolerate FM with up to 20 MHz of peak to peak deviation at 10 MHz modulation rates. The practical application is that a counter with good FM tolerance will permit the measurement of a transmitter carrier while it is carrying traffic. Thus, there is no need to take the transmitter off the air for routine frequency checks.

A few modern counters are capable of power measurements. Combining

frequency selectivity with power measurement capability enables selective measuring of the power of various signals, just as in a spectrum analyzer.

Frequency Selective Power Meter

Here, the counter is concurrently measuring the power and frequency of a smaller signal in the presence of larger signals (see Figure 27). This takes advantage of the frequency selectivity offered by the YIG filter. Because the YIG filter allows only one signal to pass, the counter actually provides better power accuracy than a power meter in multiple signal environments. The power meter's detector has a wide bandwidth and is susceptible to errors when several high amplitude signals are simultaneously present. The counter, on the other hand, uses the YIG filter to select and measure the power of individual signals (as long as they are separated by 100 MHz).

Source Locking

Source locking is another application of a microwave frequency counter. Source locking is phase-locking a microwave source to the frequency counter, giving the source the same frequency accuracy as the counter. Source-locking is also the ability to phase lock the frequency of an electrically tunable microwave source, giving the source the same frequency accuracy as the counter (see Figure 28).

Source-locking offers improved frequency stability and accuracy for various

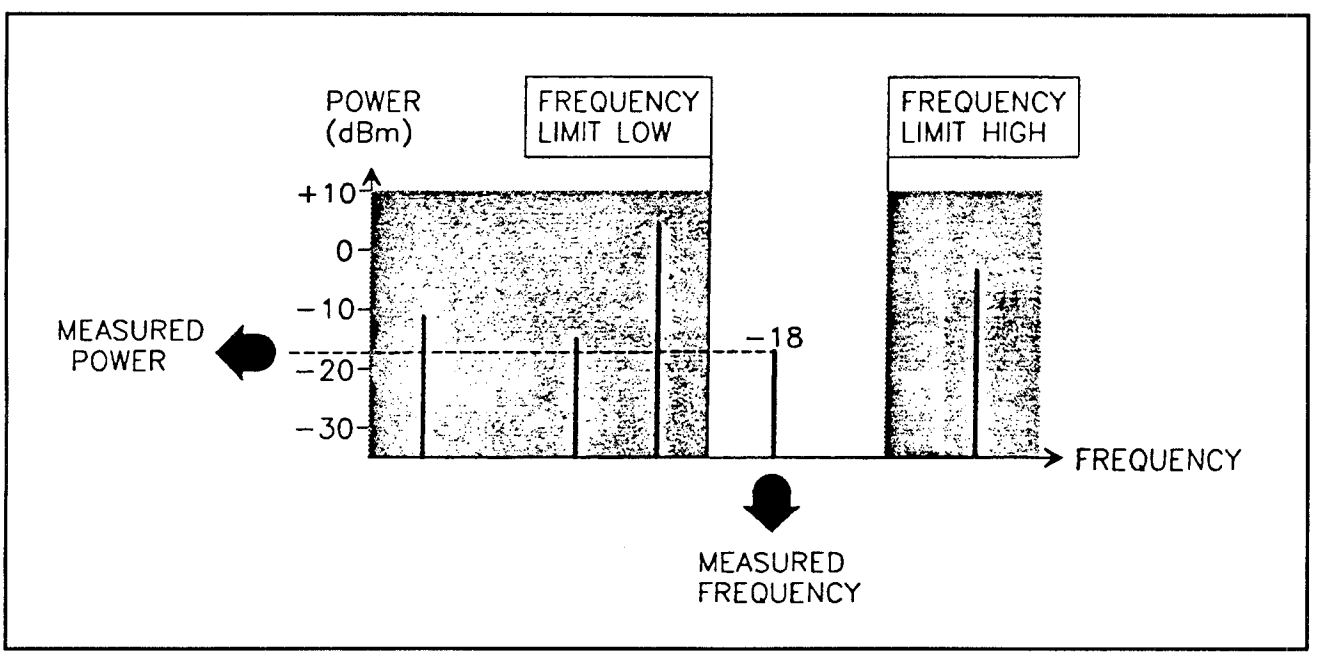

Figure 27: Some counters can serve as frequency selective power meters

types of device measurements. Unsynthesized microwave sources typically have accuracies of ±10 MHz or more. Using source-locking, the output from the source may be set precisely at a particular frequency, to a resolution of 10 kHz, improving the frequency accuracy and stability of the source. The counter continuously monitors the output frequency and adjusts the phase-lock voltage to hold the frequency constant.

Why not use a synthesizer? Cost! Especially in the millimeter-wave frequency region, a source-locking counter with a millimeter-wave oscillator can be very cost-effective.

Source-locking is not appropriate for all applications; it will certainly not turn a simple oscillator into a synthesizer. But source-locking can be an economical alternative to a synthesizer for many different applications. Source-locking may be used when the application does not call for fast frequency switching. A source-locked oscillator takes a few hundred milliseconds to switch frequency, whereas a synthesizer might take microseconds, or more typically, a few milliseconds. Source-locking is also appropriate for applications where low phase noise is not required.

Source-locking can be performed on any electrically tunable source, including sweep oscillators, millimeter-wave oscillators, and so forth. Some electrically tunable sources are:

- HP 8350B Sweeper
- Hughes Millimeter-Wave Gunn Oscillator
- Wavetek 950/960 Sweeper
- Wiltron 6600 Sweeper

How does source-locking work? When used in a source-locking configuration, the counter first determines the tuning polarity and sensitivity by stepping the tuning voltage. The counter then adjusts the *coarse tune* voltage to bring the source within the phase-lock range. The phase-lock range is determined by the tuning sensitivity of the oscillator being locked. EIP's source-locking counters, the EIP 575B and 578B, have a *phase-lock* voltage range of ±10 V.

Once the coarse tune is complete, the phase-lock voltage is adjusted to fine tune the oscillator's output frequency. While phase-locking, the counter continuously monitors the oscillator frequency, adjusting the phase-lock voltage to keep the oscillator at the selected frequency. Coarse tune is not necessary if the oscillator is to be locked only over a narrow band.

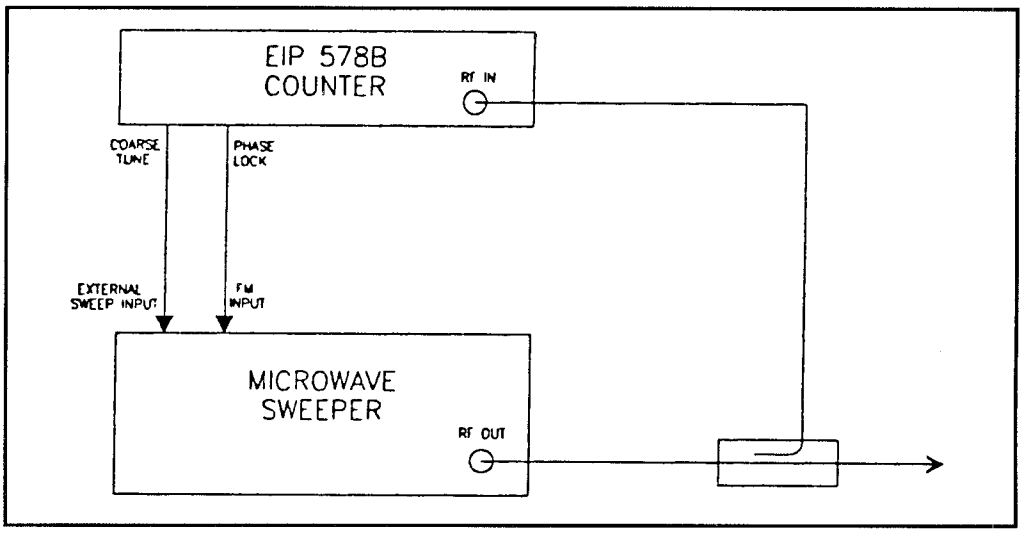

Figure 28: An illustration of how source locking works

For source-locking a microwave sweeper, for example, the coarse tune output of the counter is connected to the external sweep input of the source. The phase-lock output of the counter is connected to the FM input of the source. Finally, a sample of the source's output is supplied to the counter.

Some source-locking counters offer three different phase-lock loop bandwidth choices: 500 Hz, 2 kHz, and 10 kHz. The phase-lock loop bandwidth represents the response speed of the loop, that is, the maximum modulation rate that the counter can tolerate and yet still maintain phase-lock (see Figure 29).

Source-Locking Bandwidth

For sources with limited tuning speeds, the counter offers the 500 Hz and 2 kHz bandwidth settings. These are particularly useful for sources with narrow FM bandwidths (that is, slower tuning), where the 10 kHz bandwidth setting may cause oscillation in the phase-lock loop.

Pulsed Signal Microwave Frequency Counters

Up to this point, this tutorial has focused on continuous wave microwave frequency counters. A CW, or continuous wave, signal is a sinusoidal waveform that is continuous. In other words, although the signal may vary in frequency or amplitude, it is always present.

Pulsed signals, on the other hand, are not continuous. By definition, a pulsed

signal is not always present, appearing and disappearing, usually at regular intervals. A pulsed signal may be thought of as a CW signal that is being switched on and off. Besides frequency, there are two fundamental parameters describing pulsed signals: pulse period and pulse width. Pulse period is the time from the start of one pulse to the start of the next. Pulse width is the time over which the signal is "on." Sometimes *duty cycle* is used to describe a pulse. Duty cycle is defined as:

Duty Cycle = (Pulse Width) / (Pulse Period)

Another common term is "pulse repetition frequency," or PRF, defined as:

PRF = 1/(Pulse Period)

Prior to 1976, making frequency measurements of pulsed RF signals was at best a tedious, time-consuming effort, often producing ambiguous or erroneous results. Most data were taken with one of two devices: a wavemeter for direct reading of results, or a transfer oscillator for somewhat better accuracy.

A wavemeter is a tuned cavity that absorbs signal power at its resonant frequency (see Figure 30). It offers a direct read-out or referral to a calibration chart, and is narrow-band (octave and sub-octave on 0.01% accuracy units and 1 to 2 octave coverage for units with 0.1% accuracy). As frequencies increase, the resonant cavity dimensions become smaller, and mechanical tolerances become more critical. As a result, a wavemeter used to measure frequencies in the 10 GHz region can easily give readings that are in error by as much as 10 MHz, or 0.1%. While careful calibration can reduce the error, the wavemeter method lacks the

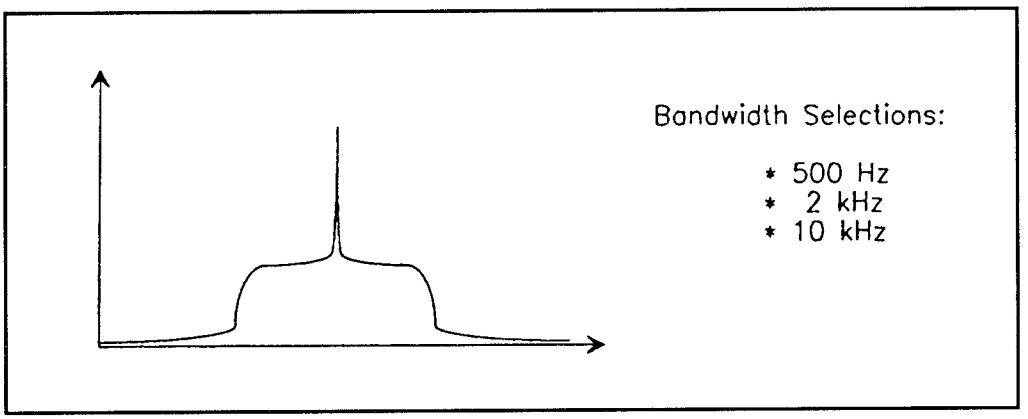

Figure 29: Source locking bandwidth

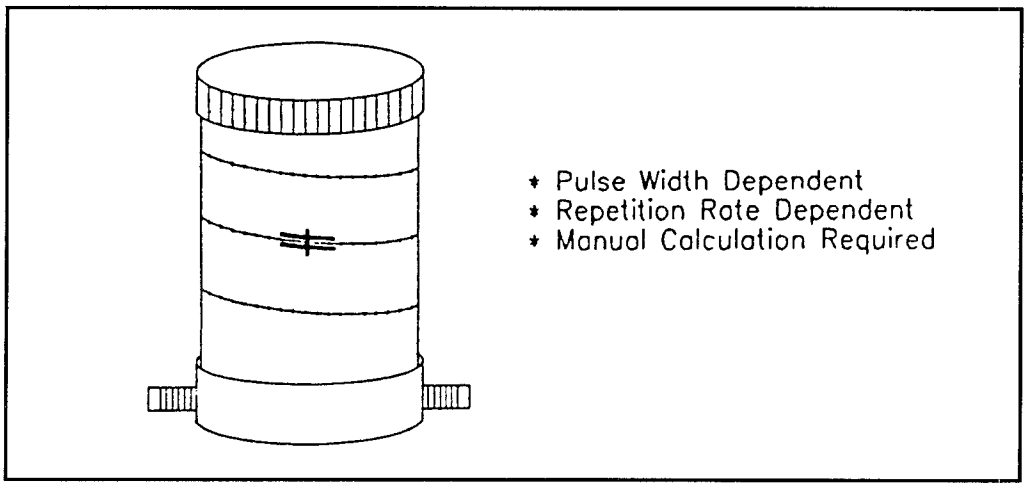

Figure 30: A wavemeter or tuned cavity

accuracy required in many applications and can, in addition, be quite time-consuming.

The transfer oscillator technique merely takes a wavemeter and incorporates it at the input of an automatic counter. The user turns a crank which varies the size, and hence resonant frequency, of the cavity. Both wavemeter and transfer oscillator measurements are extremely pulse width and repetition rate dependent. *You* are the pulse detector, and *you* must watch the unit closely. Neither the wavemeter method nor the transfer oscillator method is suited for automatic testing.

The first automatic pulse frequency counter, the EIP 451, was introduced in 1976. This unit used an automatic version of the harmonic heterodyne converter to measure pulsed microwave signals. It featured direct digital display of results, 10 kHz resolution, broad frequency range, automated test capability, and the ability to measure frequency at particular points in time on repetitive signals.

Modern pulse counters, like the EIP 580 and 1230 series, are able to measure CW and pulsed signals automatically with pulse widths as narrow as 50 ns and pulse periods as short as 250 ns. No manual switching is required to measure CW or pulsed signals; the counter automatically detects the type of signal and sets itself up appropriately.

These counters also measure the pulse width or pulse period of the input signal

to a 10 ns resolution. Through the inhibit input, the instruments can profile chirped pulses and repetitive time varying signals with samples as narrow as 15 ns. Figure 31 shows an EIP Model 588B and Figure 32 an HP 5361B. Both are CW and pulse microwave frequency counters.

Pulse Counter Architecture

Pulsed microwave frequency counters employ different architectures than CW frequency counters. These differences arise from the need of the pulse counter to measure signals that "disappear" for an interval of time. As we review the counter's block diagram, we will examine the differences between the CW and pulse versions (see Figure 33). The counter consists of two fundamental sections, the basic counter and the microwave converter.

The basic counter accepts the IF signal from the microwave converter and measures the frequency, pulse width, or pulse period of the IF (see Figure 34). Overall operation is controlled by a microprocessor. Frequency measurements are performed by comparing the unknown signal to a reference frequency, namely the time base. The time base may be either a temperature compensated crystal oscillator (TCXO), an oven controlled crystal oscillator, or an external frequency reference.

A frequency measurement is made by generating a time interval (gate time) consisting of a number of cycles of the reference. This gate time is used as an interval during which the input signal is counted by the count chain. This function is considerably more difficult for pulsed signals than it is for CW signals, and must be accomplished as two functions. The first is to supply a gate to the main gate that is present only when an input signal is also present. The

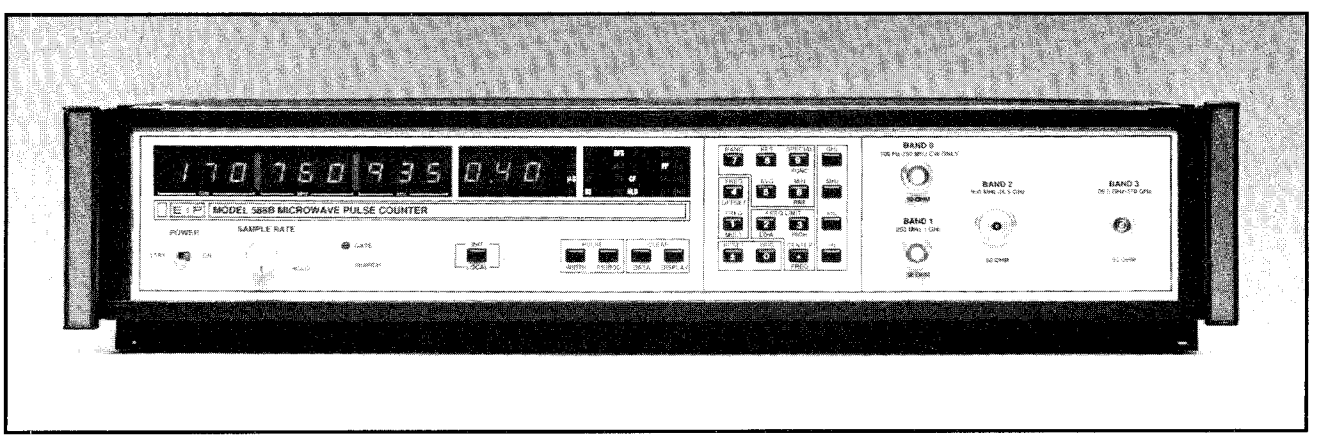

Figure 31: The EIP Model 588B Microwave Pulse Counter

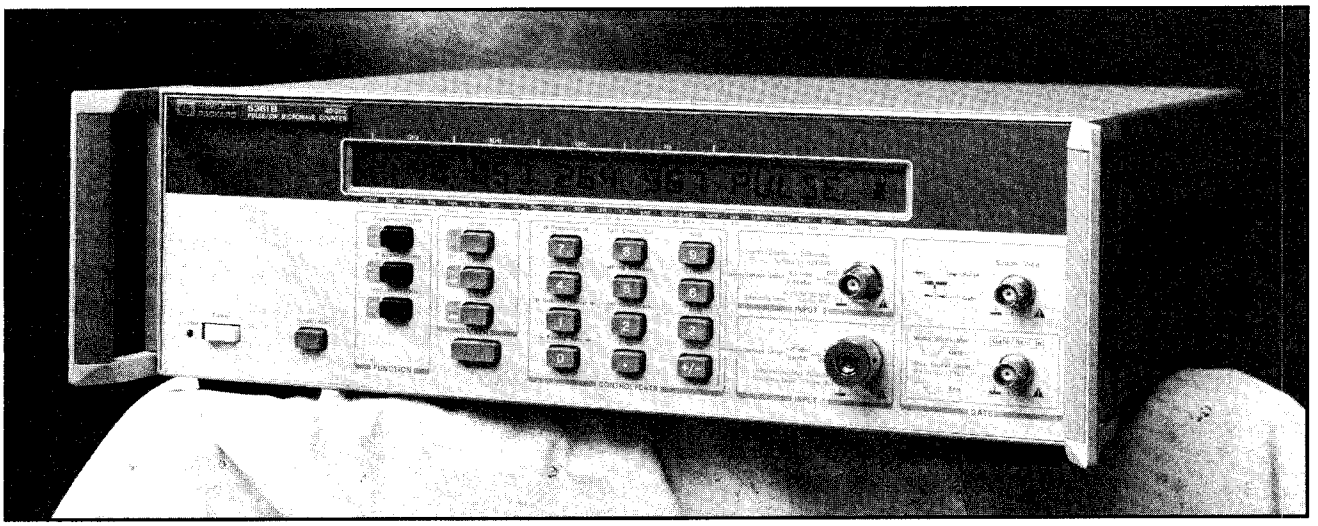

Figure 32: The Hewlett-Packard 5361B Pulse/CW Microwave Counter

second is to accumulate the total time that the gate is applied until the required gate time is reached.

The first operation requires that the gate begin after the signal is present at the main gate, and end prior to the end of the signal. This is accomplished by generating a gate approximately 30 ns shorter than the RF signal, and by delaying the arrival time of the IF pulse at the main gate so that the gate will fall entirely within the IF pulse (see Figure 35). The IF pulse is delayed using a delay line. By clipping the leading and trailing 15 ns of the pulse, measurement accuracy is increased. Distortion on the leading and trailing edges of the pulse can significantly degrade the accuracy of the measurement, especially on very narrow pulses.

Gate Accumulation

The second operation, accumulating the required gate time, is accomplished by counting reference clock pulses whenever the gate is open, until a total time equal to 1/RESOLUTION is obtained (see Figure 36). Remember, in a direct counter the required gate time is the inverse of the desired measurement resolution. For pulsed signals the maximum duration of the gate is limited by the width of the pulsed signal. Thus, depending upon the width of the pulse and the resolution selected, it may take multiple pulses to accumulate enough gate time to complete a measurement. For example, if the pulse width is 1 ms and the selected resolution is 1 kHz (corresponding to a gate time of 1/RES or 1 ms), then the counter must accumulate gate time over 1000 pulses.

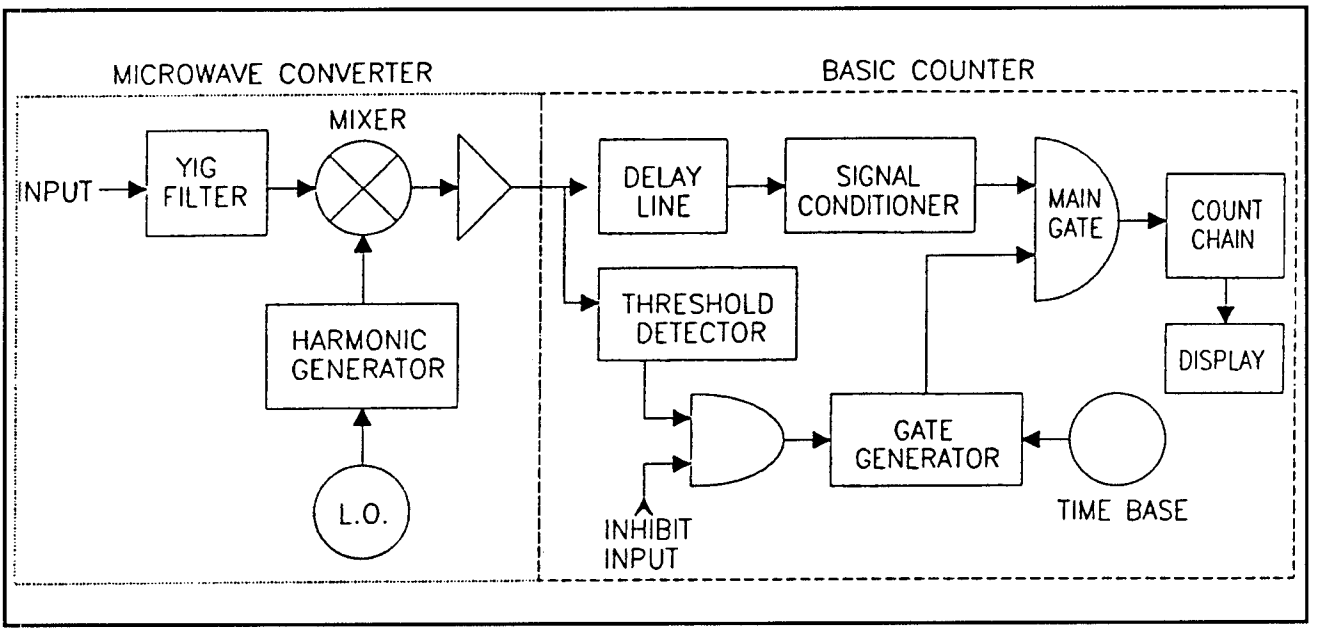

Figure 33: Pulse counter architecture

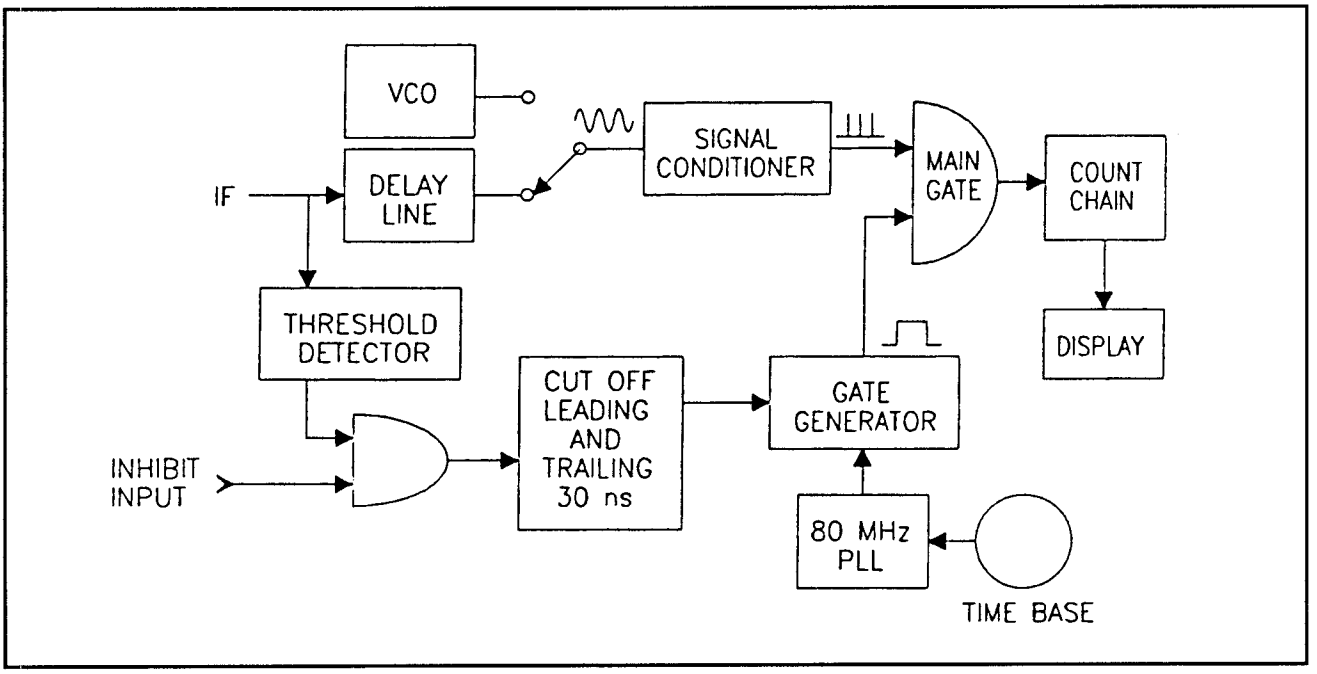

Figure 34: The basic counter part of a pulse counter

Basic Counter Time Base

Each gate opening is an exact integral number of clock pulses. An 80 MHz clock, phase-locked to the 10 MHz time base, is used to generate the gate, thus the gate will be an exact multiple of 12.5 ns ($1/80 \times 10^6 = 12.5 \times 10^{-9}$). The 80 MHz clock is necessary in order to generate the very narrow gate intervals required for narrow pulses.

The basic counter incorporates a switch to select between the delayed IF or the internal VCO, prescaled by four, as the input to the signal conditioner. By selecting and counting the internal 400-500 MHz VCO, and using the threshold detector to detect the rising and falling edges of the pulse, the pulse width may be measured. Similarly, the pulse period is measured by counting the VCO frequency during the time between the rising edge of one pulse and the rising edge of the next.

The pulsed version of the basic counter includes the addition of input inhibit circuitry. This enables the counter to measure frequency during a user-controlled time window. Normally, the counter will count whenever a signal threshold is detected. By gating signal threshold with an external signal, the counter can be made to count only at specific points in time. The external signal can be thought of as a measurement enable. Thus, both signal threshold and the proper voltage level on the *inhibit* input are required for the counter to perform a measurement.

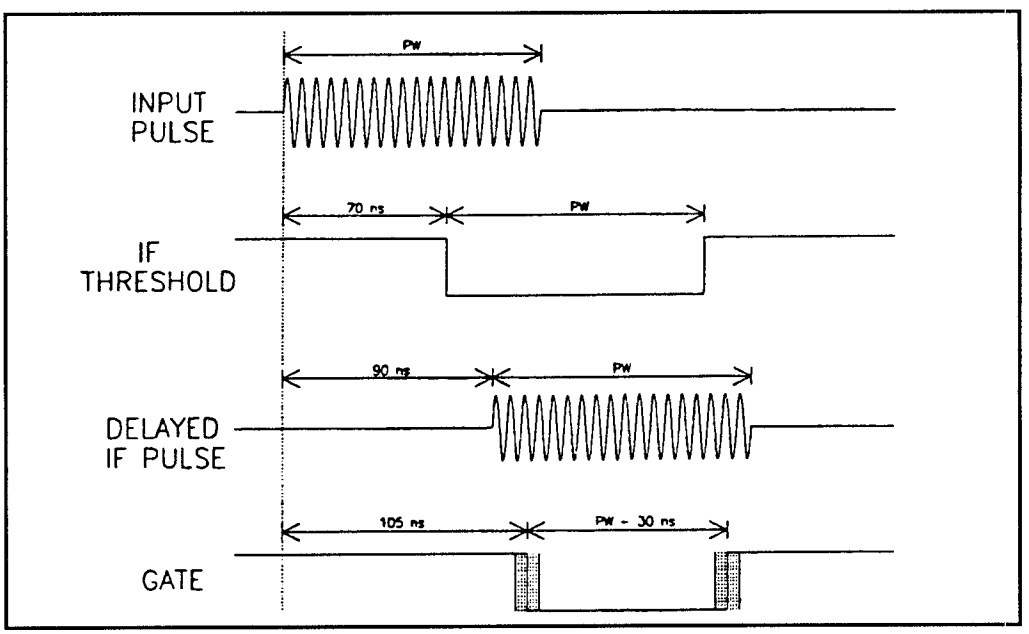

Figure 35: Counter timing in a pulse counter

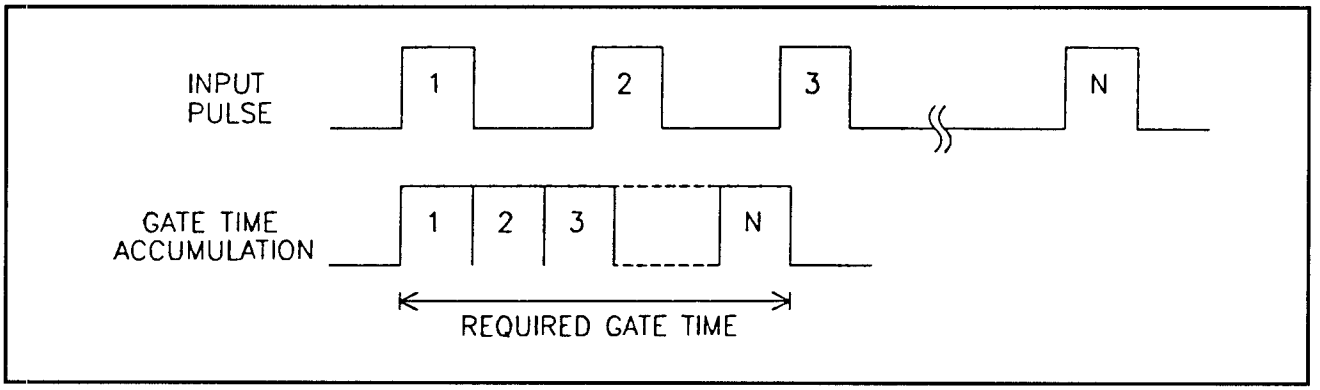

Figure 36: Gate accumulation in a pulse counter

The microwave converter down-converts the RF signal to an IF that may be directly counted. The converter consists of four functional blocks: converter control, voltage controlled oscillator (VCO), IF, and YIG assembly. The converter control contains the interface between the microprocessor bus system and the microwave components. A digital-to-analog (D/A) converter and precision current driver provide 2 MHz frequency resolution for setting the YIG filter. The converter control also contains the programmable VCO phase lock control system. This system lets the microprocessor select any VCO frequency between 4.00 and 505 MHz with a resolution of 50 kHz.

Pulse Counter Errors

When making any type of measurement, some degree of measurement error exists. In CW counters, these errors are usually limited to time base error and gate phasing error (±1 count error). When making measurements with pulsed frequency counters, gate phasing error, especially, can become very large. This is because the gate may be opened and closed several times during a single measurement. Pulse counters have two additional sources of measurement error, gate width error and distortion error.

Gate phasing error is caused by the relative timing between the gate and the incoming signal, and results in an uncertainty of ±1 count in the least significant digit. For example, after passing through the signal conditioner, the signal appears at the main gate as a pulse train. Referring to Figure 37, note that Gate A counts two zero-crossings, whereas Gate B counts three.

If the resolution of the counter is set to 1 kHz, then the potential error on each gate is ±1 kHz. In a direct frequency counter, the gate time required is inversely proportional to the desired measurement resolution.

For signals with pulse widths less than the required gate time (determined by the resolution in the direct frequency counter), the pulse counter generates more than one gate per measurement. If the counter generates N gates, an uncertainty of ±N counts is possible (though very unlikely since the error is random). The resultant averaged measurement follows the rules of statistics in that successive measurements will vary randomly to a certain degree. Most of the readings (63%) will fall between plus or minus the square root of N, where N is the number of gates required to accumulate the required gate time, that is:

$$N = RES/GW$$

where RES = resolution of measurement, and GW = gate width.

This is called the RMS averaging error. As in any statistical process, the uncertainty in the measurement can be reduced by averaging a larger number of measurements.

When narrow pulses are counted, the gate is opened and closed many times in order to accumulate enough gate time to provide the required resolution. Each time the gate opens and closes, there will be a small but finite timing error. The total error is proportional to the number of times the gate is cycled during a measurement, and is inversely proportional to the gate width. This error is also

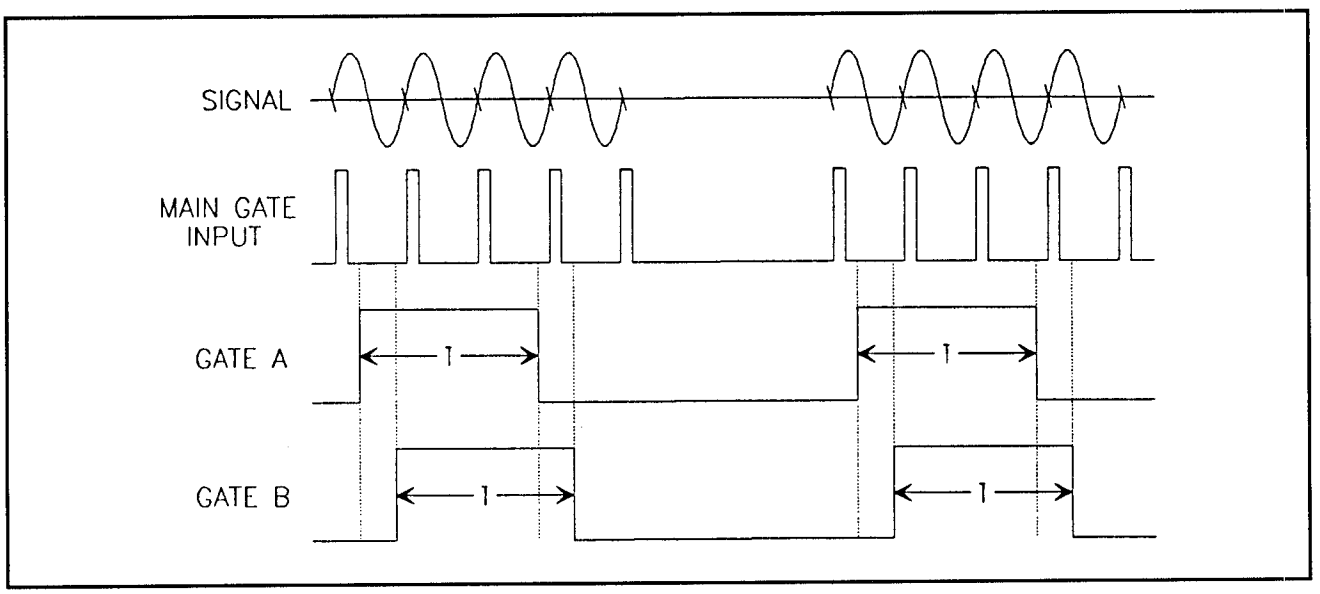

Figure 37: Gate phasing error or ±1 count error

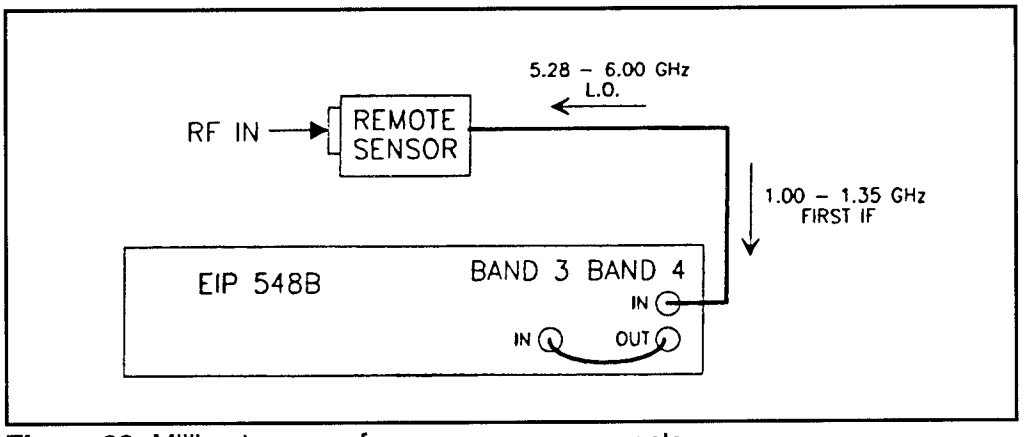

Figure 38: Millimeter-wave frequency measurements

related to both temperature and input frequency. Unlike averaging error, which is random, gate error is systematic, and thus cannot be reduced by averaging.

During the first and last few nanoseconds of a pulse, phase distortion caused by impedance mismatches or video effects can occur. This distortion causes a shift in the zero crossings of the signal. On wide pulses, distortion error is insignificant; on narrow pulses, however, it may become the dominant source of error. To reduce the effect of distortion error on count accuracy, EIP's pulse counters automatically adjust the gate to open 15 ns after the pulse begins, and to close 15 ns before it ends

Millimeter-Wave Frequency Measurements

One of the more challenging types of frequency measurement is the measurement of millimeter-wave signals. EIP counters use remote mixers to down-convert the millimeter-wave signal. The counter supplies a 5.28 to 6.0 GHz L.O. signal to the mixer, and receives a 675 MHz IF from the mixer (see Figure 38). The IF is prescaled by 4 and then counted directly.

The counter accepts eight different remote sensors, in both coaxial and waveguide configurations, up to 170 GHz. The remote sensor allows the mixer to be brought out to the device under test, eliminating the need for "plumbing" the signal back to the counter.

Video Interference

Better pulse counters feature immunity to video interference on the incoming pulse. Much of this video interference is removed by the YIG preselector. Figure 39 illustrates the removal of an error causing video signal from a pulse after processing by the counter's YIG preselector.

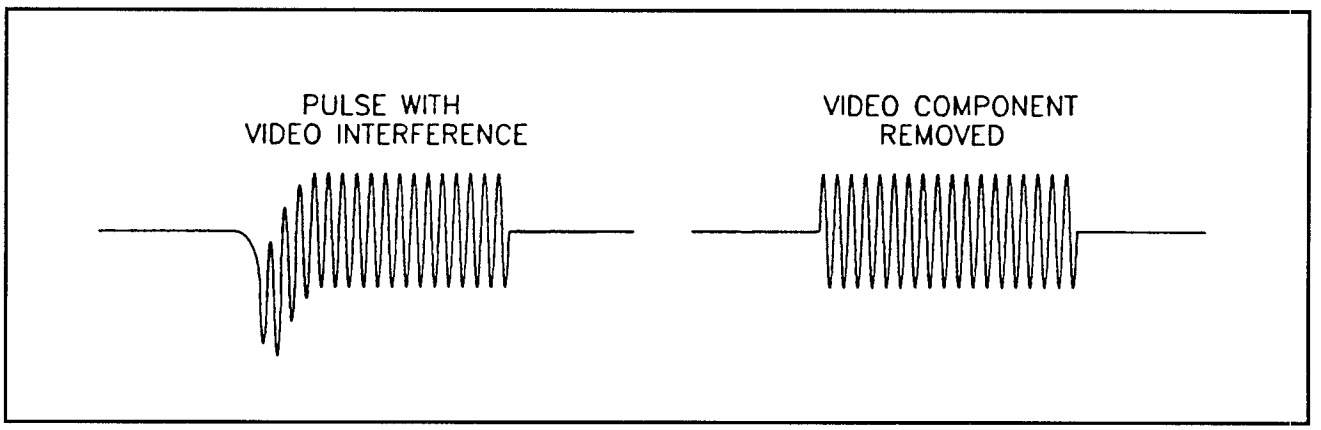

Figure 39: Video interference

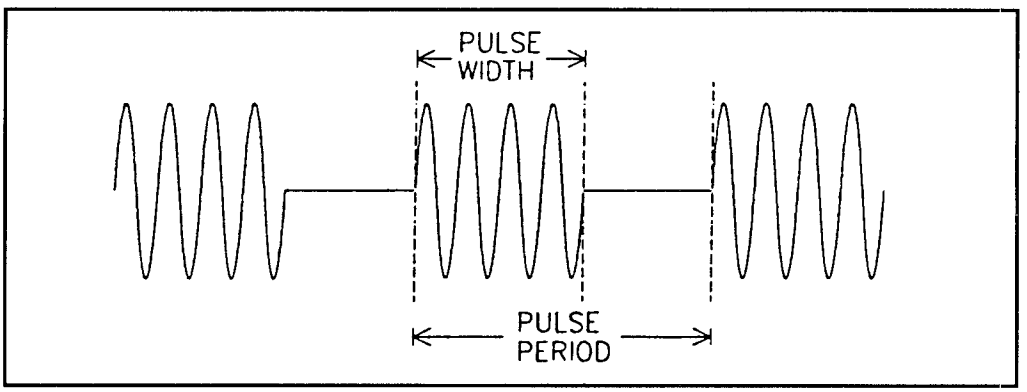

Figure 40: Pulse parameter measurements

Pulse Parameter Measurements

Modern pulse counters are able to measure the pulse period and pulse width of pulsed microwave signals. Remember, this is done by using the pulse width or pulse period to gate the internal 400-500 MHz VCO (see Figure 40).

Profiling of Time Varying Signals

Figure 41 shows the basic test setup for making frequency profiling measurements. A delaying pulse generator is used to generate the enabling pulse for the counter. The pulse generator may be triggered by the signal that triggers the source under test, or, in the case of a multiple channel pulse generator, the pulse generator may be used to trigger both the source under test and the counter (depending on the source's ability to be externally triggered).

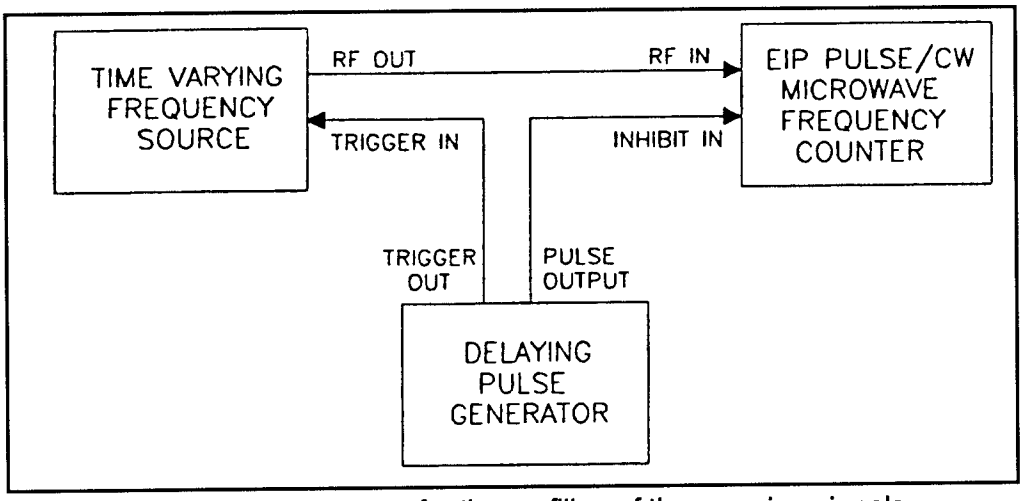

Figure 41: The basic test setup for the profiling of time varying signals

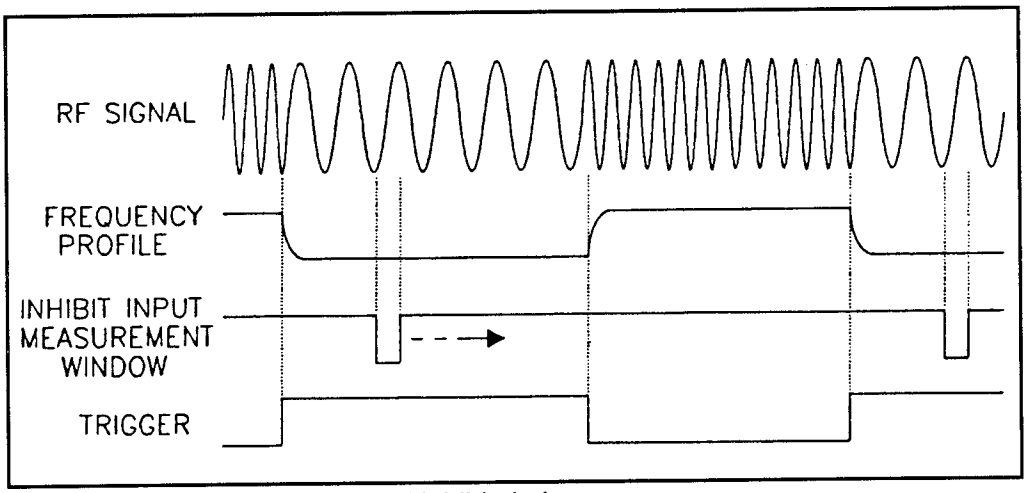

Figure 42: Pulse generator and inhibit timing

Referring to Figure 42, note that the frequency change across a pulse may be of interest for a number of reasons. The frequency shift may be intentional, as in the case of a chirp radar, or it may be an undesirable accompanying signal. For example, a pulsed magnetron may exhibit substantial frequency shift near the leading and trailing edges of the pulse, or a pulsed Gunn diode oscillator may exhibit frequency drift during a pulse due to peak power thermal effects.

By triggering the pulse generator with the pulsed RF source, the generator's

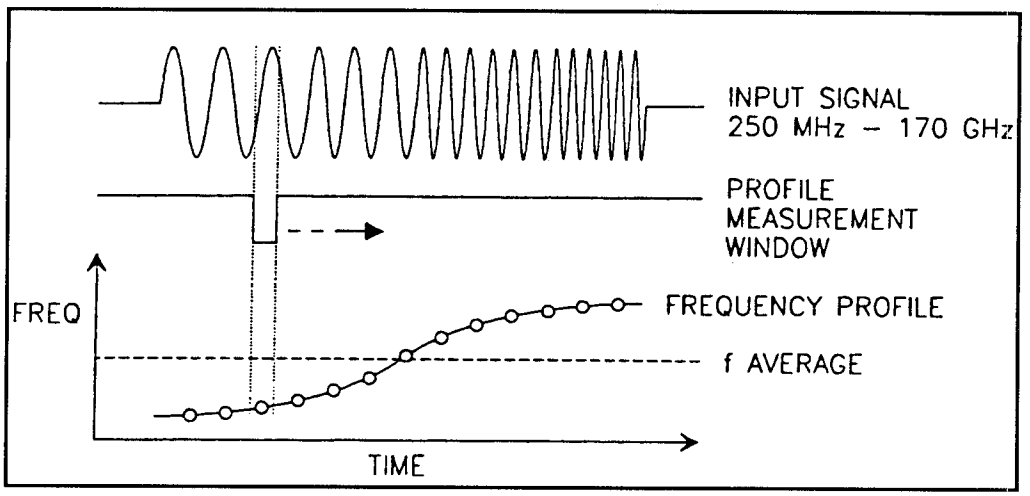

Figure 43: Profiling timing sequence

output pulse may be used to enable the counter at the appropriate point in time (see Figure 43). As the pulse delay is varied, the measurement window can be "walked" through the RF pulse.

Inherently, the output frequency of a VCO varies with the tuning voltage applied. When the tuning voltage is changed, the oscillator requires a finite amount of time to settle to its new frequency. Once settled, the VCO exhibits a characteristic drift in frequency, known as post-tuning drift (see Figure 44).

This drift is typically a result of temperature effects on the semiconductor components within the oscillator. It varies as a function of the oscillator's initial and final frequency. A square wave applied to the tuning voltage input produces a response curve of frequency versus time, allowing measurement of settling time. A triggered or low PRF square wave may be used to measure post-tuning drift. Since post-tuning drift is a function of the initial and final frequencies. A single frequency-versus-time curve may not be adequate to completely characterize the VCO. Figure 45 is the test setup to perform this check.

The delay setting of the pulse generator corresponds to the point in time, after the VCO tuning voltage is stepped, at which the frequency measurement is made (see Figure 46). By stepping this delay and measuring the frequency at each point, the VCO tuning characteristic may be obtained. Here, for example, a 100 ns frequency sample is being measured 1 ms after the voltage step. Note that the 100 ns sample is centered about the 1 ms delay.

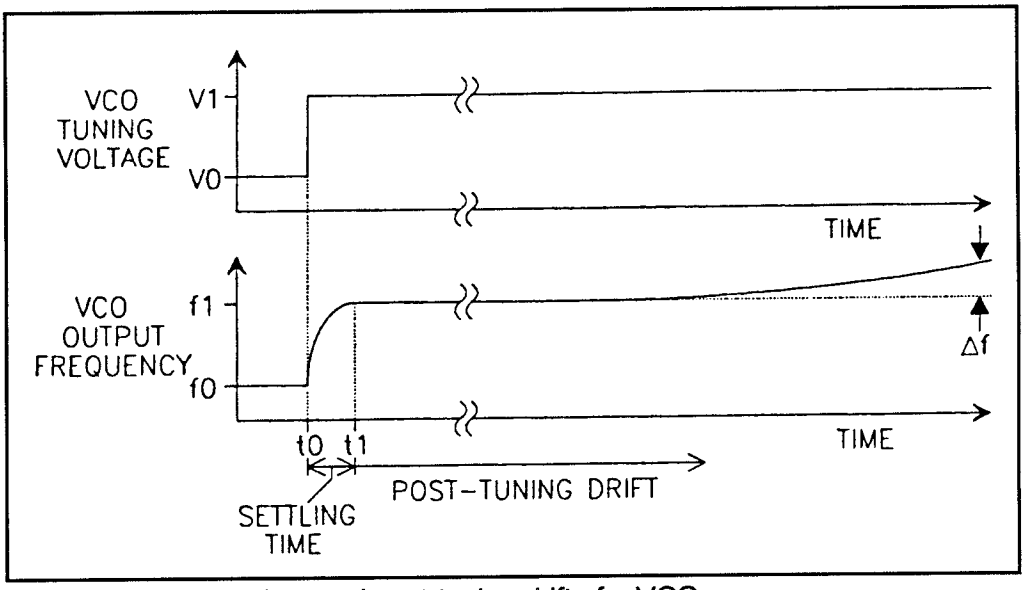

Figure 44: Settling time and post-tuning drift of a VCO

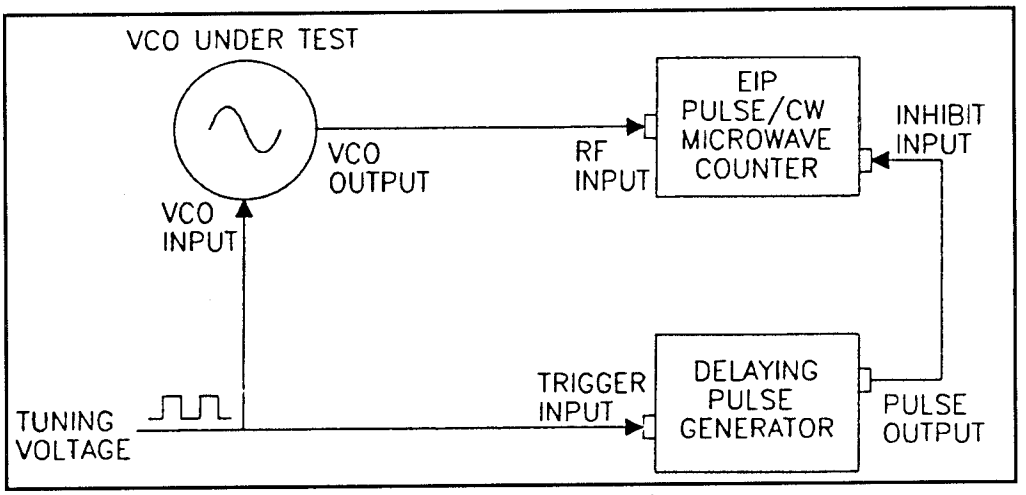

Figure 45: VCO characterization measurement setup

Sweeping Generator Markers

Most microwave sweep generators provide some form of frequency markers (see Figure 47). These markers are used to indicate the frequency at a particular point in the sweep. Typically, the marker is generated as a function of the sweep signal, and thus its accuracy is dependent upon the accuracy and linearity of the sweep circuits, as well as the accuracy and linearity of the oscillator. For a typical

sweeper, the marker frequency may be in error by as much as ±100 MHz.

To measure the frequency of the marker signal, a measurement enable pulse is applied to the inhibit input of the counter coincident with the marker signal. This signal may be supplied by a pulse generator that is triggered with the sweep output signal from the microwave sweeper.

The pulse generator output is used as the measurement window for the counter measurement (see Figure 48). The width of the pulse and the amount of delay after the trigger are adjusted to align the generator's pulse with the marker signal. This alignment may be performed using an oscilloscope.

To prevent the counter from timing out between measurement windows, the minimum pulse repetition frequency must be entered in the counter. Some counters offer a *center frequency* mode of operation, whereby the counter only searches for signals that are within 50 MHz of the entered value. Using center frequency considerably reduces the signal acquisition time.

Frequency Agile Signal Analysis

Measurement of a repetitive sequence of pulses, differing in frequency, as in a frequency agile communications system, may be desired. A frequency agile system is often used in the military. The transmitter and receiver jump frequencies in rapid succession. The manner in which they jump is governed by a PNG (Pseudorandom Number Generator). This shift register, with an Exclusive-OR fed back bit, makes the output follow a strange incomprehensible sequence, thus

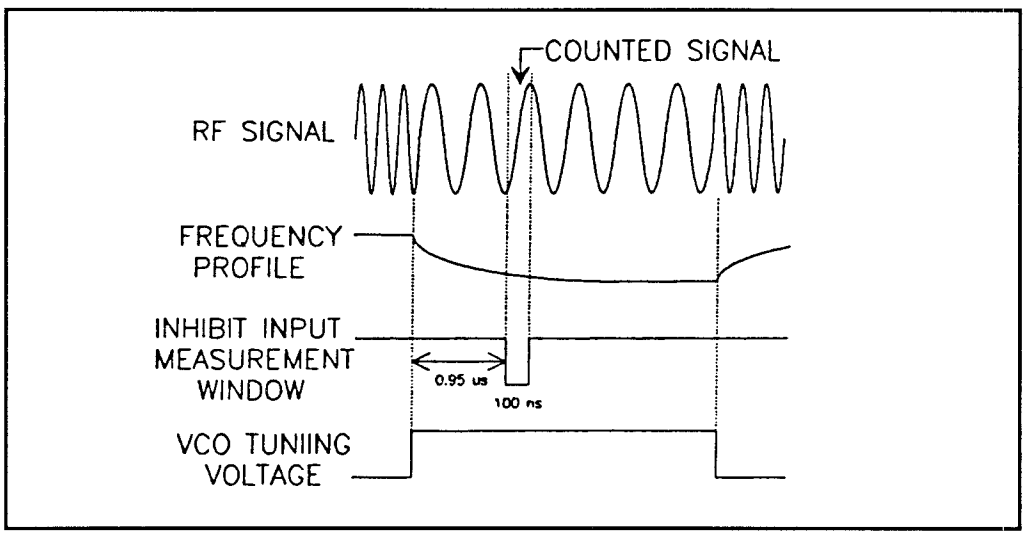

Figure 46: Inhibit timing for VCO characterization

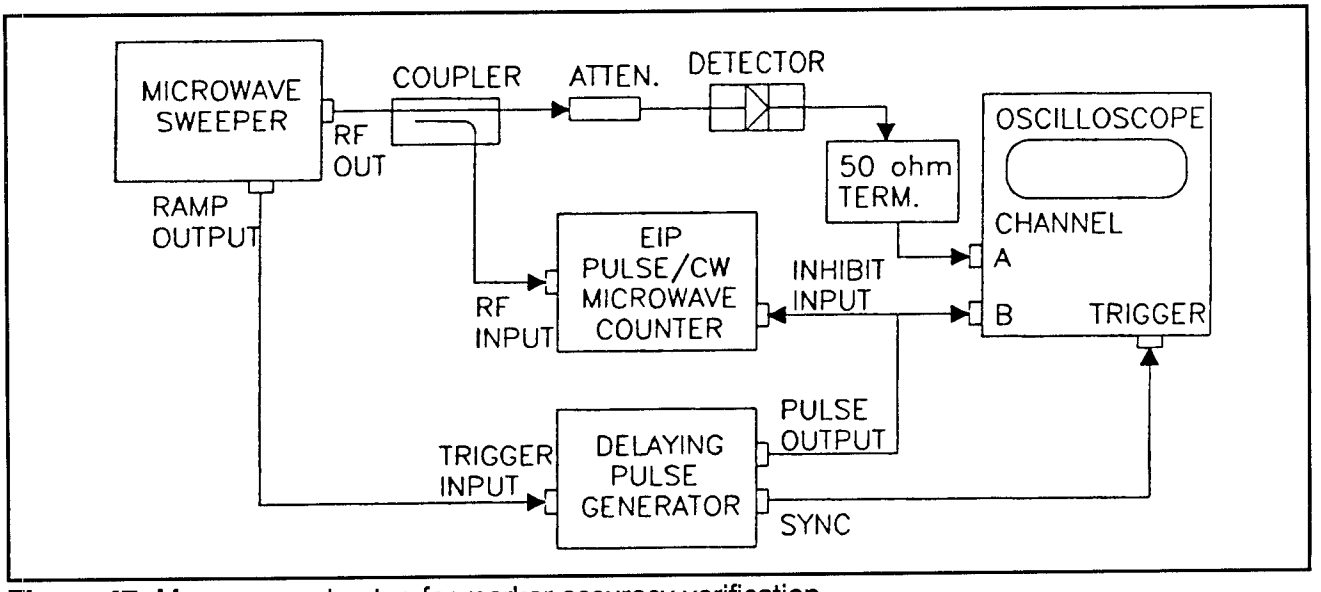

Figure 47: Measurement setup for marker accuracy verification

thwarting attempts to detect or decipher what is being transmitted.

How would you directly measure the frequency of each pulse in this strange sequence? There are two methods for measuring repetitive, multiple pulse signals: 1) time windowing, using a delaying pulse generator, and 2) frequency windowing, using a preselector.

Time Windowing

In the time windowing technique (see Figure 49), the measurement enable input

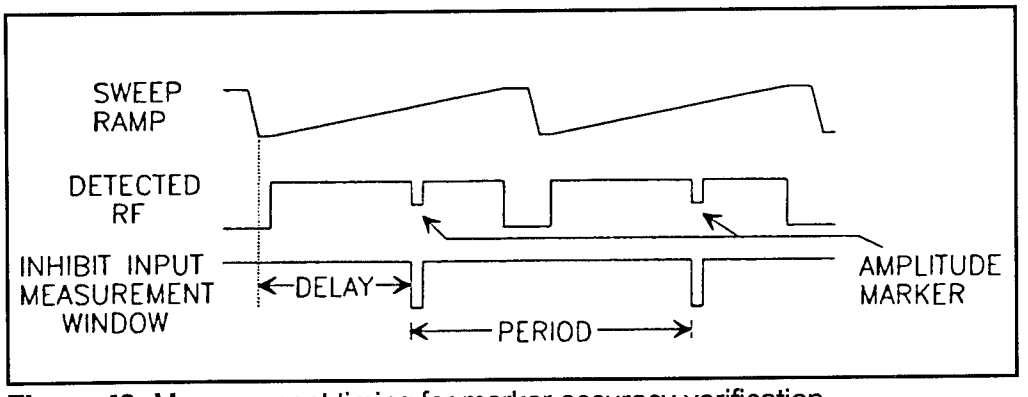

Figure 48: Measurement timing for marker accuracy verification

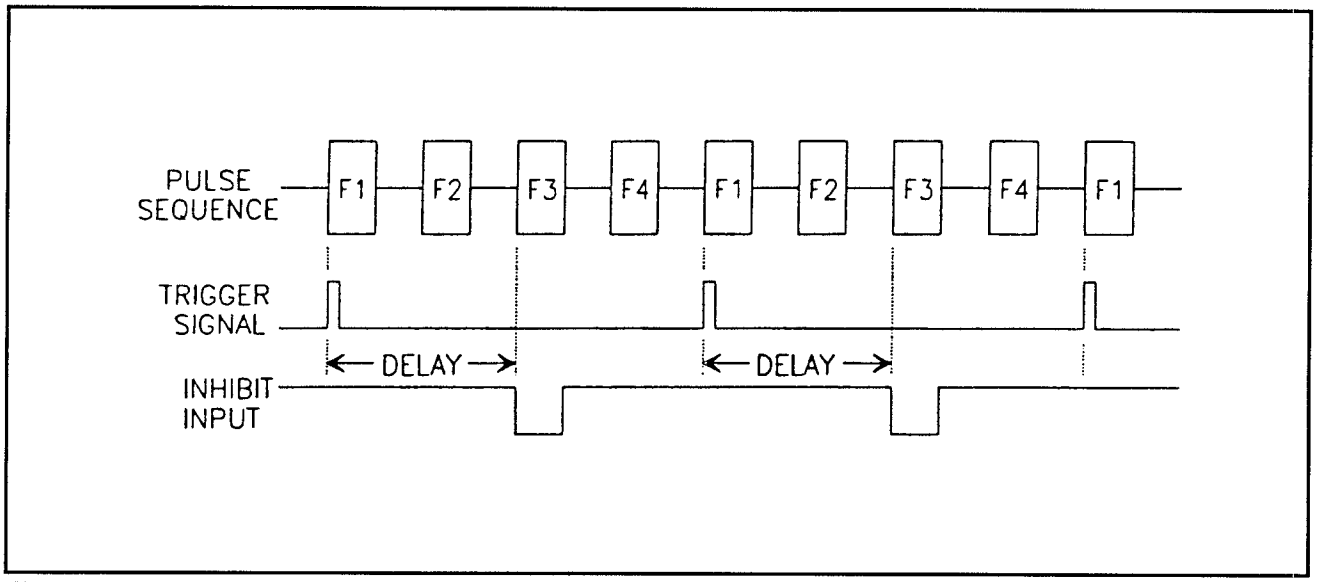

Figure 49: The time windowing technique for frequency agile signal analysis

(inhibit input) is used to discriminate between pulses. The enabling pulse can be slightly wider than the pulse to be measured. Some pulse counters automatically reduce the measurement window by approximately 15 ns on each edge in order to reduce distortion effects from the leading and trailing edges of RF pulses. By shifting the delay time of the enable pulse, each RF pulse in the sequence may be separately measured.

The pulses of interest must be greater than 50 ns in width in order for the counter to measure properly. In addition, the maximum time between the leading edges of the selected pulses must be known. The reciprocal of this time should be used to set the minimum PRF setting of the counter (this prevents the counter from timing out between measurement windows).

Frequency Windowing

If the approximate frequencies of the pulses are known, the second method, frequency windowing, may be used (see Figure 50). This method uses the YIG preselector in the EIP counter to reject all frequencies not of interest. The frequency limits of the counter are adjusted so that the counter measures only one of the RF pulses in the sequence. By moving the frequency window, each different frequency in the pattern may be measured. This method does not require a pulse generator, but can only be used in the microwave frequency range (which has the preselector).

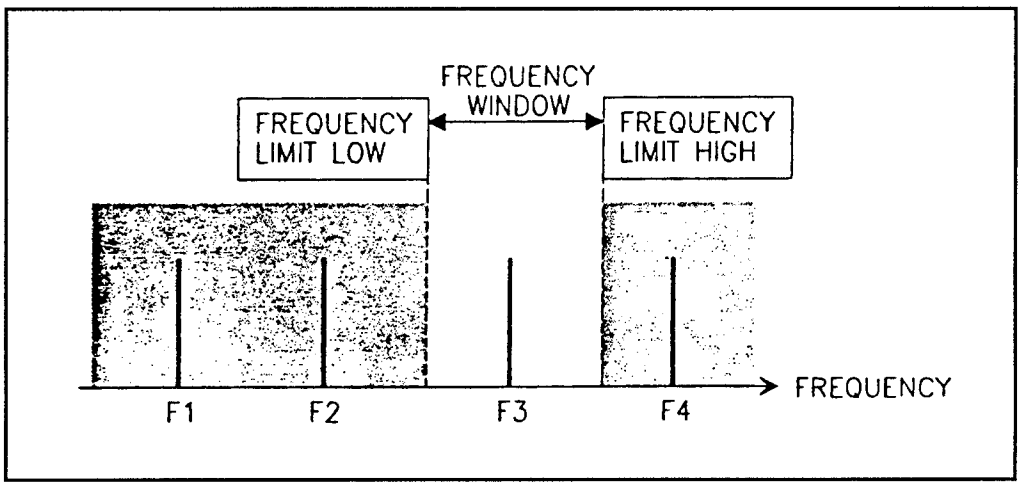

Figure 50: The frequency windowing technique for frequency agile signal analysis

The minimum PRF and pulse width requirements are the same as in the time windowing technique. This technique also requires the minimum frequency separation between signals be approximately 100 MHz. You require this separation to allow the YIG to selectively pass only one pulse.

Applications of the HP 5342A Microwave Counter

We'll wrap up this article with four applications of the Hewlett-Packard 5342A Microwave Frequency Counter pictured in Figure 51.

For the first application, you need to measure the local oscillator of a microwave radio receiver. The L.O. is 70 MHz less than the 3,850 MHz transmitted frequency, but for convenience you wish to reference this measurement to the transmitted frequency.

The solution is to measure the L.O. of the receiver in the 5342A's high-frequency input with an offset of +70 MHz entered on the keyboard. The display will read 70 + 3,780 = 3,850 MHz. Note the 70 MHz IF oscillator can be measured in the low-frequency input of the 5342A. If an output connector for the IF is not available, an oscilloscope probe can be used to probe the interior of the radio (see Figure 52).

In the second application, you need a simple, automated test setup to measure the tuning linearity of microwave VCOs in a production area.

Figure 51: The HP 5342A Microwave Frequency Counter

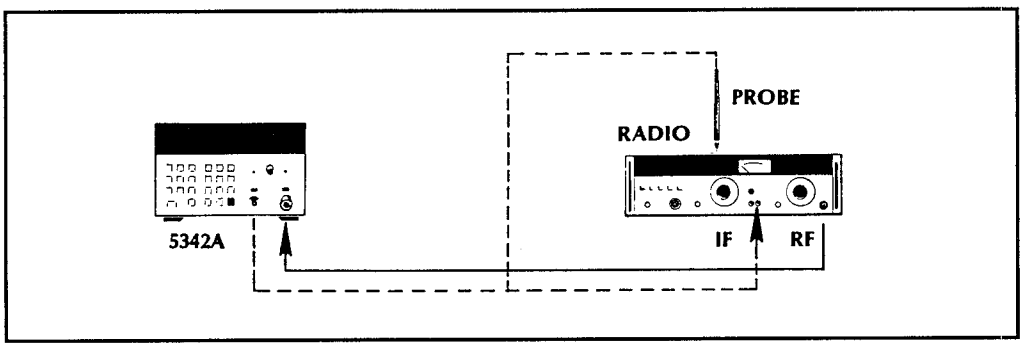

Figure 52: Measuring the local oscillator of a microwave radio receiver

The solution is to construct a small system using the HP Interface Bus (IEEE-488), with a desk-top computing controller such as the HP Model 9825A. A programmable digital-to-analog converter such as the HP Model 59303A provides the voltage stimulus, and the 5342A provides the high-accuracy frequency measurement. The computing controller can print the results, or it can

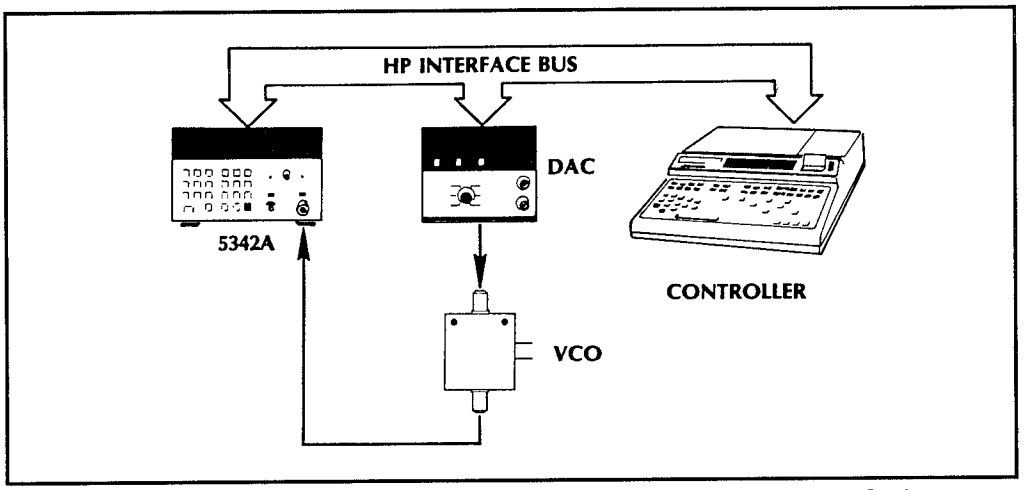

Figure 53: An automated test setup to measure the tuning linearity of microwave VCOs in a production area

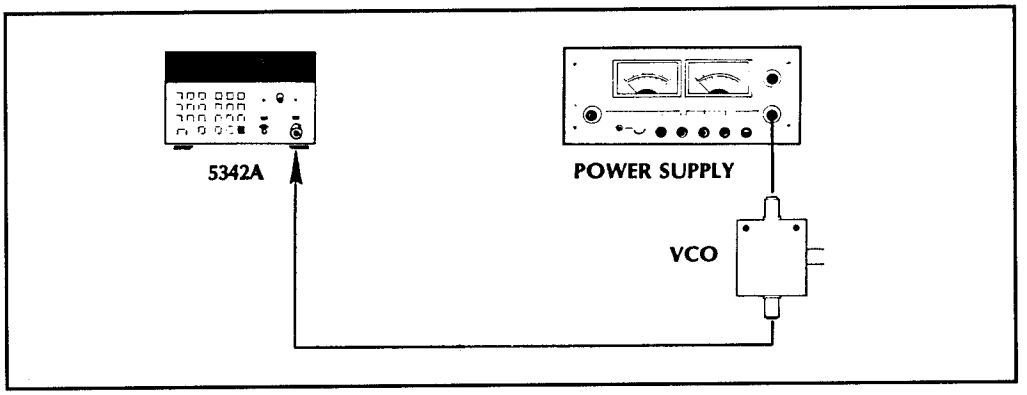

Figure 54: Measuring the effect of small frequency changes on the output power of a microwave VCO

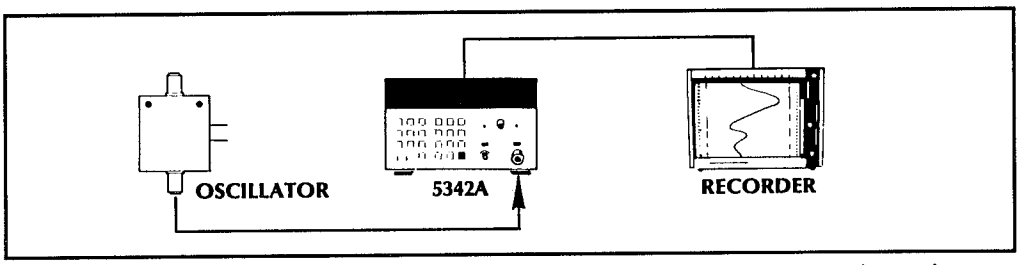

Figure 55: Characterizing the drift of a microwave oscillator over a long time

be configured to graph the output on an XY plotter (see Figure 53).

In the next application, let's assume you need to measure the effect of small frequency changes on the output power of a microwave VCO.

The solution is to use the HP 5342A with Option 002. With this setup you can measure both parameters simultaneously. You can "fine tune" the VCO's output frequency with a power supply and observe amplitude changes with frequency on the 5342A's display (see Figure 54).

In our final application, let's assume you need to characterize the drift of a microwave oscillator over a long time.

The 5342A with Option H01 provides analog output of operator-selected digits in the 5342A's display. With the HP 5342A, measure the oscillator's output, by connecting the analog output from the 5342A's rear panel to a strip chart recorder (see Figure 55).

Considerations in Choosing a Microwave Counter

If you intend to purchase a microwave frequency counter, you should consider the following attributes before making a selection: Signal inputs, systems interface, and IF offsets.

Signal Inputs

The first check of the inputs to a microwave counter is to insure the frequency ranges covered by the various input connectors satisfy the requirements of the application. At times, it can be burdensome to be continually changing the input connector from one spigot to another. Of course, the ideal situation in a systems application is for one connector to cover the full frequency range of the counter. A consideration of great importance in microwave counters is that of damage level limitations on the input signal level. Most modern microwave counters tolerate up to +25 dBm inputs without damage. An overload indicator that warns of an input signal level approaching the damage level can also be very useful.

Systems Interface

A feature of great importance in microwave counters is systems compatibility. Specifying an input/output interface compatible with IEEE Standard 488-1975 (or later version) insures the counter readily interacts with printers, computers, and desk-top controllers in a well-defined fashion. The Hewlett-Packard Interface Bus, which is HP's implementation of IEEE-488, provides data output and programming of all front panel controls of microwave counters using the ASCII code via an 8-bit bi-directional bus.

IF Offsets

In some communications applications of microwave counters, it is convenient to have the counter's display offset by some constant. This feature is available in most microwave counters today. The most elegant provision for offsets, though, is found in the HP Model 5342A. This allows you to enter, via a front panel keyboard, arbitrary offsets (to a resolution of 1 Hz). A microprocessor in the instrument makes this possible. — *Vaughn D. Martin*

Company Names and Addresses

EIP Microwave, Inc.
1589 South Hillview Dr.
Milpitas, CA 95035)

Hewlett-Packard, Inc.
1501 Page Mill Rd.
Palo Alto, CA 94304

Integra Microwave
744 South Hillview Dr.
Milpitas, CA 95035)

4/3 - O
Oscilloscope

An Introduction

In conjunction with the multimeter, the oscilloscope is probably the most frequently used instrument. Figure 1 shows a typical scope found on a technician's workbench. It is more versatile than a multimeter, since an oscilloscope shows the shape of a waveform, as well as its amplitude. Without the ability to see what a certain signal is doing, you can only guess if it is operating properly.

An oscilloscope displays a graph of changing voltage in the vertical axis against time in the horizontal axis. This ability to measure in two dimensions makes the oscilloscope the singularly most accurate piece of equipment. In order to accomplish this, the bandwith and sensitivity must be adequate for use in your applications. A scope that is unable to lock on and amplify signals in TV equipment would be completely useless when repairing these devices.

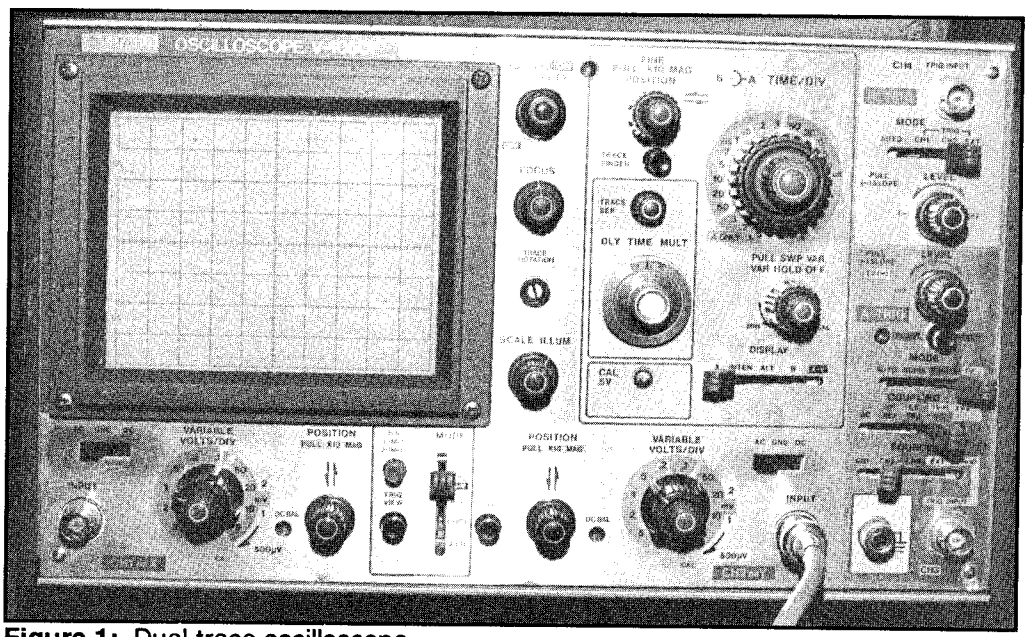

Figure 1: Dual-trace oscilloscope

Oscilloscopes can be broken down into two general categories: real-time and non-real-time. Real-time oscilloscopes (non-storage) can only be used to observe rapidly redundant waveforms, whereas non-real-time scopes (storage oscilloscopes) allow you to see singly-occurring waveforms. An interrupt request signal to a microprocessor is an example of a singly-occurring waveform. This kind of signal would only occur every so often and last for only a few microseconds. A real-time scope would be unable to view this. Figure 2 shows a breakdown of the various types of real-time and non-real-time oscilloscopes.

Most modern scopes are capable of inputting two or more signals and displaying them simultaneously. Oscilloscopes measure in upwards of 20 GHz with signals above 10 GHz measured with a sampling oscilloscope. A sampling oscilloscope holds each sample for one sampling period, and then replaces it with the next sample. If a sampling oscilloscope is used, the signal can be stored and displayed from a few seconds to a few years.

Although it is nearly impossible to choose a scope with all features for all applications, the single most important feature in a scope is the bandwidth. Using a 100 MHz scope to measure a broadband amplifier of 470 MHz would be difficult and inaccurate. The bandwidth of a scope for use in this manual will not need to be higher than about 50 MHz. For most of your applications, you should not need a scope with a larger range than this. However, frequencies that

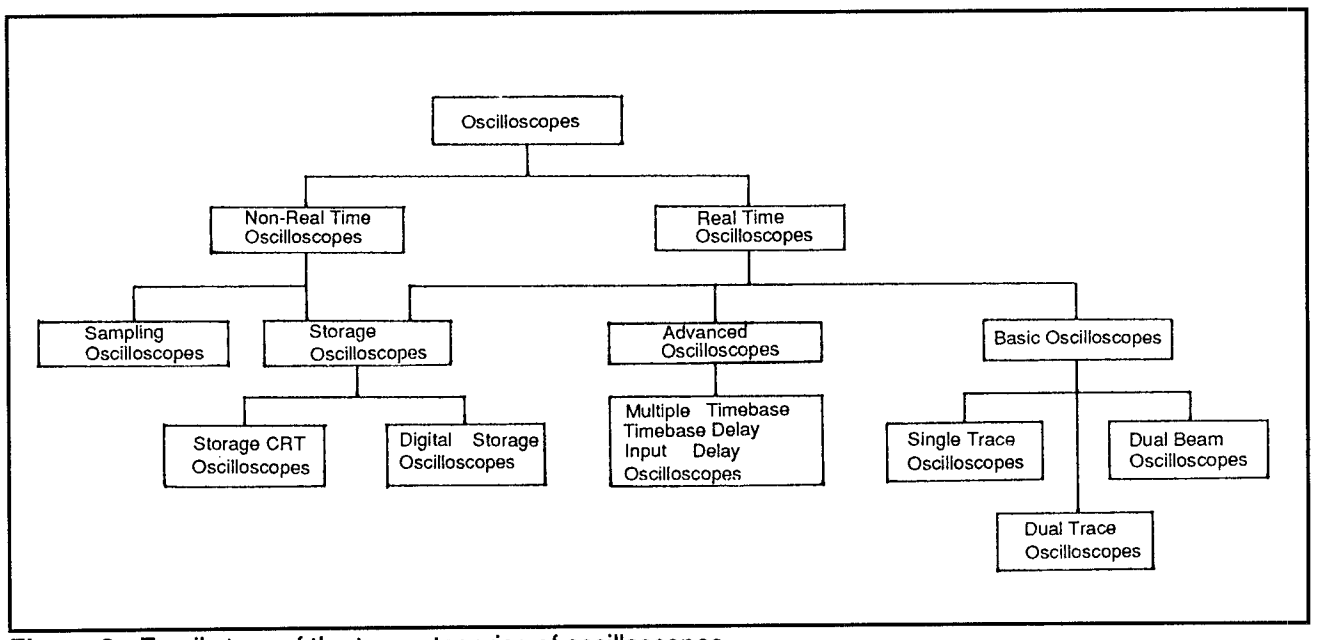

Figure 2: Family tree of the two categories of oscilloscopes

get too close to the upper limits may not produce accurate readings. For example, a one volt peak-to-peak, 3.58 MHz color signal displayed on 5 MHz scope will not read the one volt.

Bandwidth

Bandwidth (MHz) is approximately equal to 0.35 divided by either the rise time (µs) or by the band of frequencies a circuit passes. Any frequency components outside the oscilloscope's bandwidth are visible, but at a diminished size. A typical bandwidth between 30 and 50 MHz is adequate for most technician work.

Related to the bandwidth and as a consequence of the bandwidth, are the range of amplification factors of the vertical amplifier. The greater the wave's bandwidth, the smaller it will be on the display screen.

Oscilloscope screens are marked with a grid 10 centimeters wide and 8 centimeters high. Each grid square division is called a graticule. The amplification factor is denoted in volts/centimeter or volts/division. The volts/division begin from the center and proceed up the Y-axis as positive and down the Y-axis as negative. With a factor of 20 volts/cm there would be a total screen height of 40 volts (20 positive volts and 20 negative volts).

The Y-axis displays the amplification of a waveform. Typical amplification factor ranges are from about 10 mV/cm to 5 V/cm. A better scope will have a greater range.

The X-axis must have similar frequency ability to work adequately. The X range is found in the time-base generator controls of the scope. Time-base ranges refer to the time taken for the beam to sweep from the left side to the right side of the CRT display. Ranges from 10 µs to 2 s are average.

Bandwidth specifications are most often misleading because they indicate frequency response at the -3 dB point on the bandwidth curve. A notable roll-off can be found below the -3 dB point, so the scope amplitude readings may or may not be true if the amplitude of any waveform is not a flat top with a frequency of more than 50 percent of the maximum bandwidth of the scope.

Dual-Trace

Dual-trace oscilloscopes are the most common form of oscilloscope available. It is possible to obtain four and eight input scopes for special applications (e.g., measuring surround-sound signals all at the same time). Dual-trace or multitrace scopes can use a single split beam, or multiple beams. Dual-trace oscilloscopes are the instruments discussed and used in this manual.

A dual trace scope has: two input signals inputted via two input channels and then

sent selectively to the display screen. The display of each signal may be measured independently, together, alternately, or chopped. Each channel is referred to as A and B, respectively.

Working with a single view is fairly self-explanatory. Either the A or the B signal is on the screen and you can adjust the controls for the A or B section.

Both signals displayed simultaneously may be layered upon one another or divided between the lower and upper halves of the display. Figure 3 shows an example of two signals being compared. This works well when measuring the output of the left and right channels of a stereo unit. You could compare and match the two signals by sending the same input signal to both receiver inputs. Layering the two displays provides the means to adjust the signals to match (assuming the scope's A & B channels are set for the same settings).

In the alternate mode, shown in Figure 4, the display is switched between A and

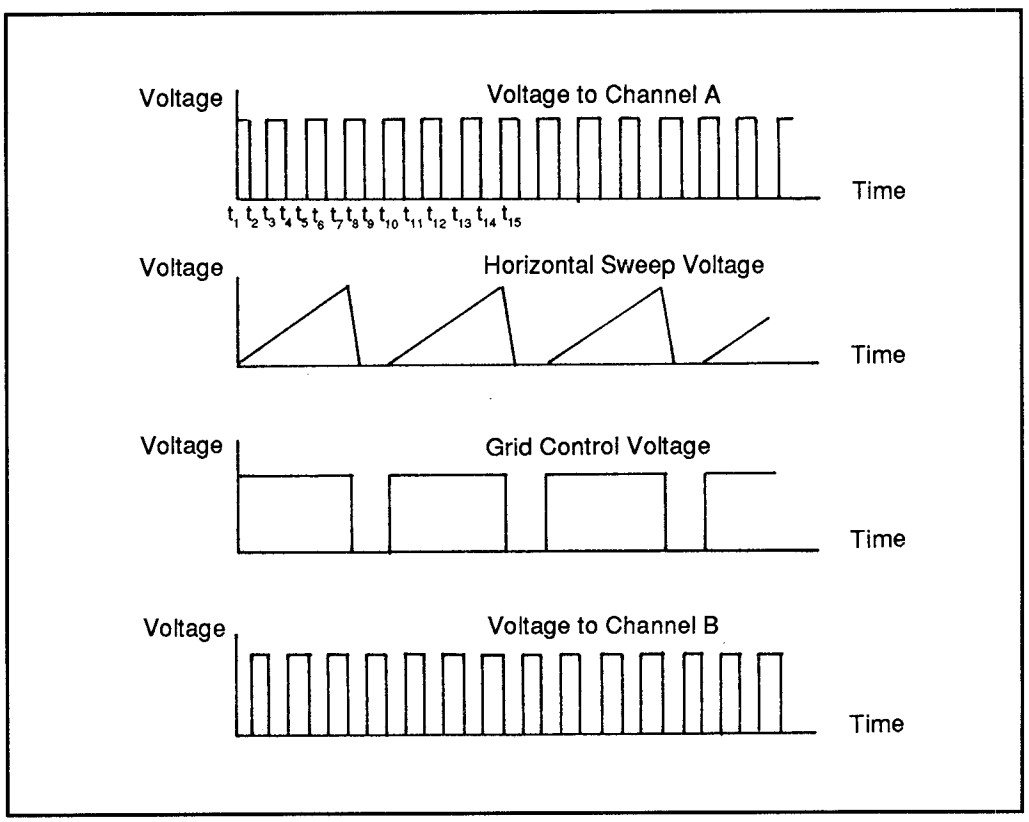

Figure 3: Two signals being compared

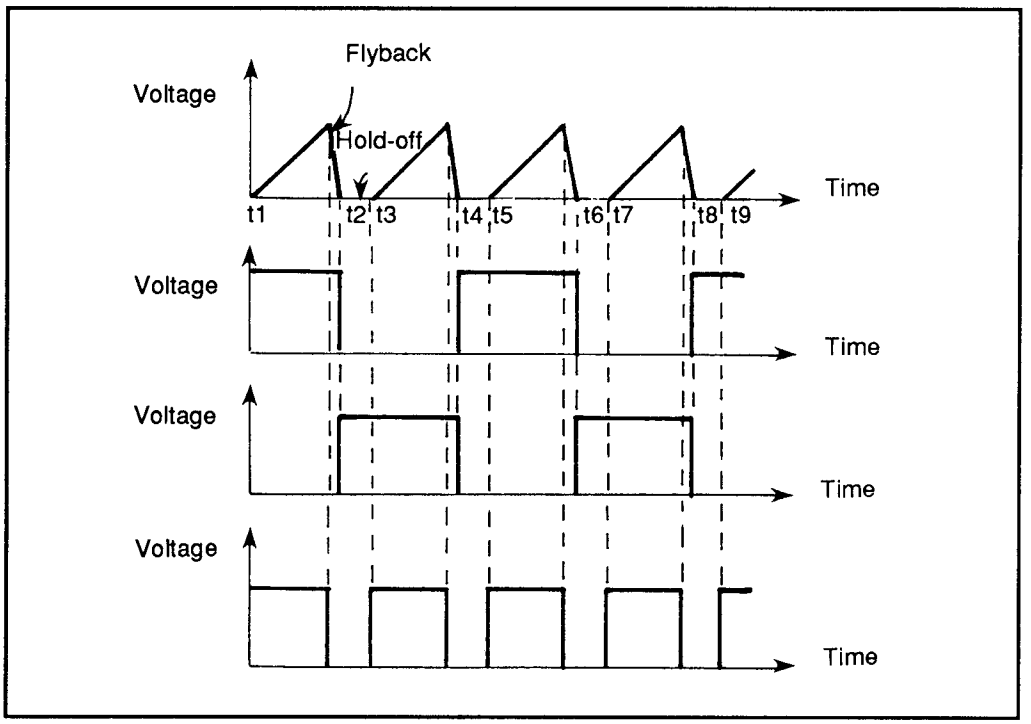

Figure 4: Alternate mode for two signals

B, letting each show for one cycle of the horizontal sweep. The alternate mode cannot be used for displaying very low frequencies.

The chopped mode is shown in Figure 5. When selected, this mode allows small segments from each channel to be connected alternately to the vertical amplifier and displayed. If the chopping rate is much faster than the horizontal sweep rate, the display will be a continuous line for each channel. If the sweep rate approaches the chopping rate, the individual segments will be visible and you should use the alternate mode.

The dual-trace scope cannot capture two fast, transient events. It also cannot switch fast enough between the traces. For this to occur you would need a dual-beam oscilloscope with two separate electron beams, and two separate vertical channels.

Trigger Input

When troubleshooting TV-related circuits, an oscilloscope with a trigger input is necessary. In a TV you will need trigger inputs for measuring correct timing of the color burst, color killer, gated automatic gain control (AGC), circuit operation and horizontal AFC. Also, a dual-trace oscilloscope with trigger input

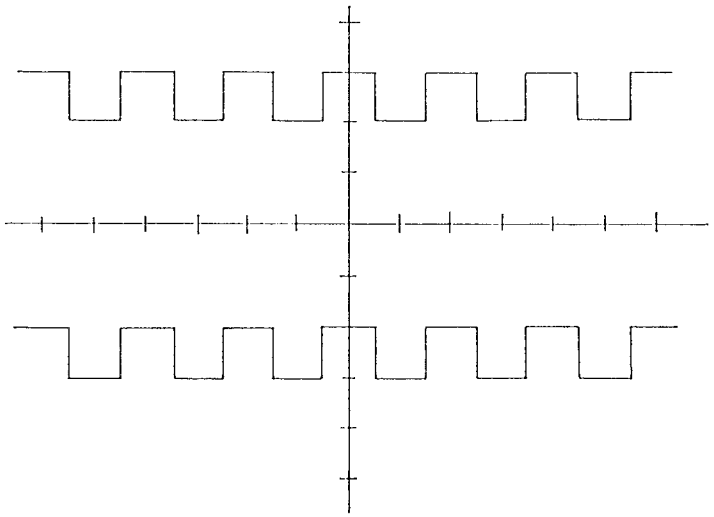

Figure 5: Chopped-mode for comparing two signals

measuring stereo channel comparison, as the trigger input can make sure both signals start at the same point. This will allow for a very accurate comparison of two signals.

If a composite video signal is used for triggering the scope, a problem could arise. Most scope triggers are designed to recognize slope polarity and amplitude levels and not the difference between the horizontal and vertical sync pulses. Scopes with a built-in integrator circuit are best and are usually noted with a switch marked TV MODE. Without this filter the scope may not lock onto the incoming signal properly.

In the triggered mode, the scope screen will be blank until a correct trigger pulse is fed to the sweep system of the scope. When received, a one-shot circuit is activated, and thus the screen displays a waveform. Sweep happens only when the correct pulse of the correct amplitude and polarity is sent to the sweep mode.

Using an automatic trigger mode can be very useful. This sets the scope in a mode of operation which does not need an external trigger (sync) signal. The sweep will run at an uneven flow rate until a trigger pulse is sensed. When a signal is applied, the automatic trigger circuit produces a sharp, clean trace that is locked in tightly.

Oscilloscope Probe

The standard input resistance of an oscilloscope's vertical amplifier is 1 MΩ. A special probe is required with such a high input resistance to prevent excessive hum pickup. A screened lead capacitance of approximately 50 to 100 pF per meter and an internal vertical amplifier input capacitance of about 15 to 50 pF will create a total input capacitance of about 100 to 150 pF. This capacitance may affect measurement accuracy.

To solve this problem a passive divider probe is used. This type of probe has an attenuator built in, which increases the resistance presented to the circuit under measurement, and thereby decreases the input capacitance. A standard probe will be about 10:1 which makes a resistance of ten times that of the vertical input of the oscilloscope, or 10 MΩ, and 1/10 the input capacitance, or about 10 to 15 pF. This will effectively reduce loading.

Probes of 10 times (10x), 100x and 1000x attenuation are available, but only useful for measuring higher frequencies. The scope must be able to sufficiently amplify this signal to see it, or the higher attenuation would be useless. These are all passive probes.

Active probes are an alternative to passive probes. They use a field effect transistor (FET) amplifier which presents a high resistance and low capacitance to the signal being measured, and no attenuation, or amplification. Active probes cost more than passive probes and require a power supply (usually a battery) for the internal amplifier to function.

An oscilloscope is designed to measure voltage. However, by using a current probe you can measure the current of a circuit. This type of probe has an internal transformer to develop an equivalent voltage which is then sent to the oscilloscope. These probes have low frequency response limits, but active current probes are available to allow the scope to measure currents down to DC.

Error and Accuracy

Three main sources of error occur when an oscilloscope takes measurements. First, loading occurs, which makes the measured voltages less accurate.

When using a passive probe, you must adjust the internal probe compensation capacitor to keep waveform distortion and amplitude error to a minimum. This should be adjusted every time the oscilloscope is to be used in this way. To check the probe, simply observe a 1 kHz square wave and adjust the capacitor for clean square transition corners. Most oscilloscopes will have a 1 kHz output on the front panel to make this adjustment. Figure 6 shows the difference between a properly adjusted capacitor and an improperly adjusted one.

The second source of errors comes from the internal oscilloscope circuits. Errors can be created from incorrect amplifier gain to incorrect timing adjustments. With the vertical amplifier controls set in the calibration position, an input of 10 volts, for example, should produce a display corresponding to a 10 volt vertical displacement on the display screen. When the time-base generator controls are set in their calibration position, a pulse input of 1 second duration should produce a waveform display agreeing to that of the horizontal displacement. Using the same square wave output, the vertical amplifier and time-base generator errors can be adjusted.

User errors are the third source of problems when taking measurements. Parallax

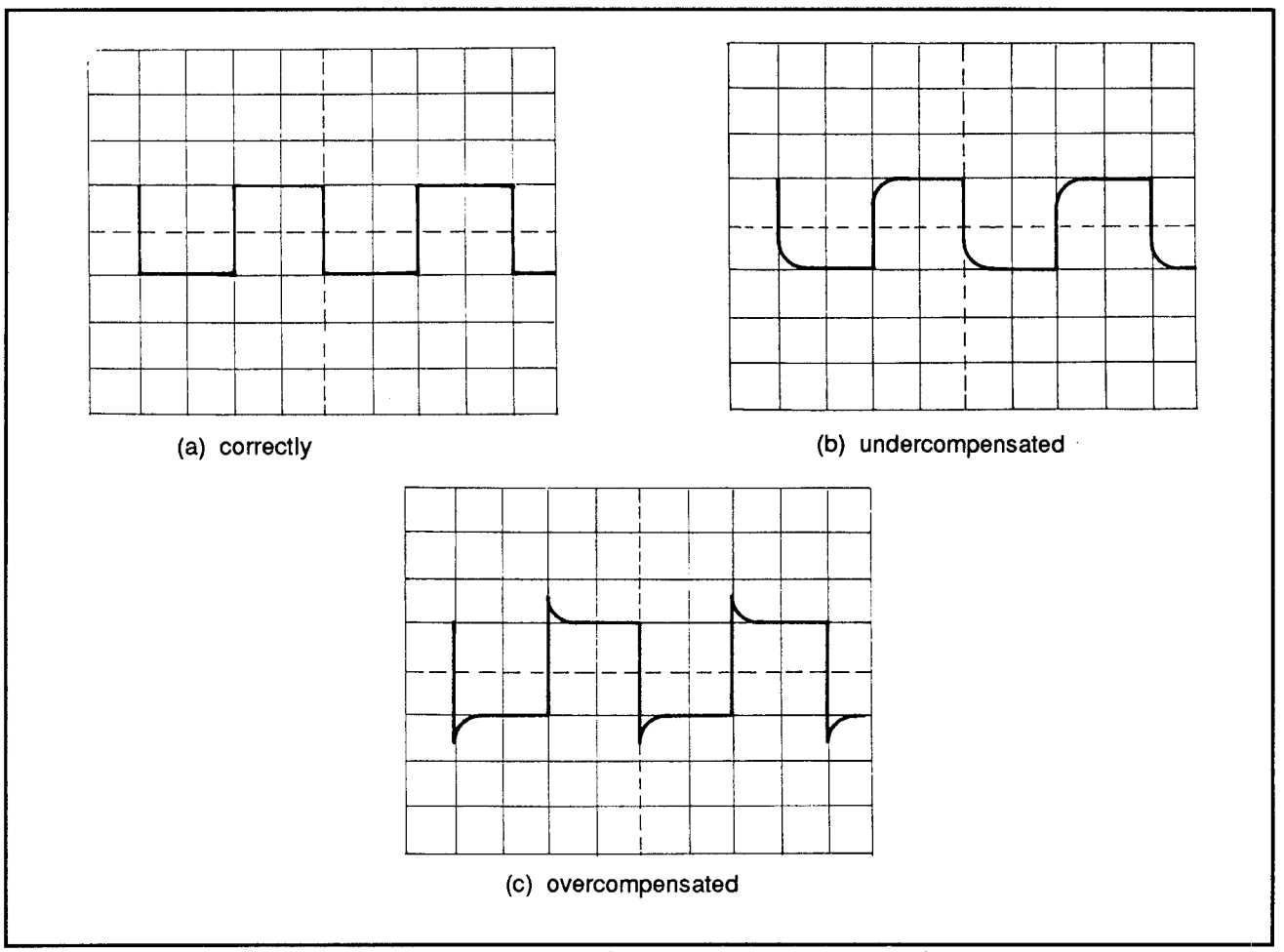

Figure 6: Waveforms for an applied squarewave when the passive probe is adjusted (a) correctly (b) under-compensated (c) over-compensated

is the most common problem. In most oscilloscopes, the graticule is in a different plane than the layer of phosphor on the screen. This means that you must look squarely into the screen to get any kind of accuracy. Otherwise, parallax will occur and change your reading.

Keep the beam set at a low intensity. A lower intensity beam produces a sharper, smaller beam, making reading easier. Beam focus should be checked regularly to maintain sharpness.

Frequency Measurement

By measuring the period of a waveform you can find the frequency by taking the reciprocal of this value. A method of determining an unknown frequency is comparing the frequency to Lissajous figures as shown in Figure 7. These figures

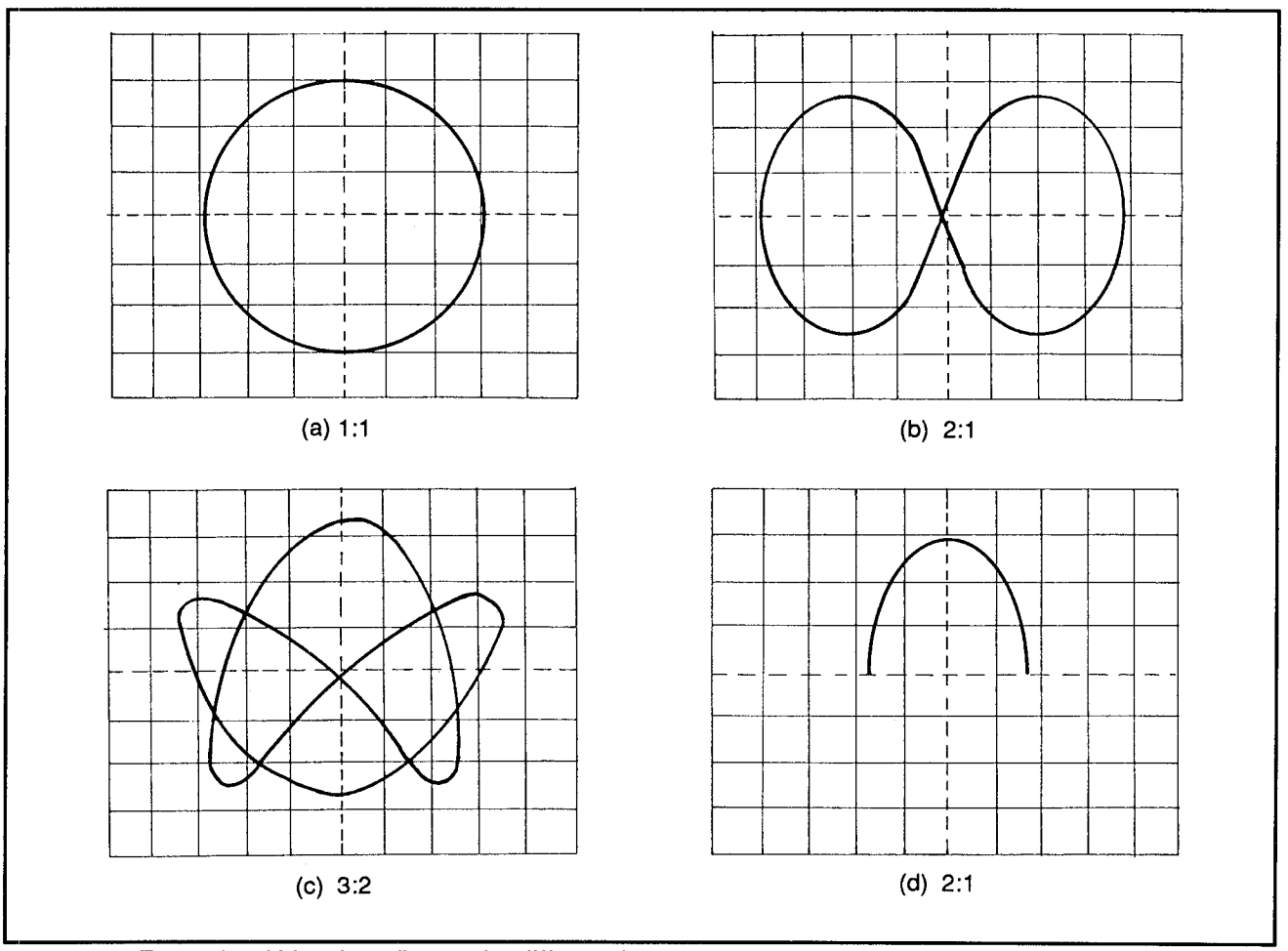

Figure 7: Example of Lissajous figures for different frequency ratios: (a) 1:1 (b) 2:1 (c) 3:2 (d) 2:1

are generated from accurately known frequencies. An unknown frequency is compared with an accurately known frequency (Lissajous frequency) and the ratio between the two frequencies is determined.

To get the ratio of an unknown frequency and a Lissajous figure, the unknown frequency is sent into the vertical input of the scope. Switch off the internal time base of the scope, and an output from a signal generator (known frequency) is sent to the horizontal input. Adjust the sensitivity of both inputs so the display fills as much of the screen as possible. The signal generator frequency is adjusted to create a stationary display on the scope. There will now be a fixed ratio between the two inputs. The ratio is found by the number of crossing points in the display over the vertical and horizontal lines.

If the two frequencies are equal, or 1:1, then the display will be a circle as shown in Figure 7(a). This lets you know that the frequency equals the generator setting with an accuracy of 0.0001 percent. The display received depends on the frequency ratio and the phase relationship of the two input frequencies.

Figure 7(d) shows a double image. This is displayed when the high-frequency signal is 90 degrees ahead of (leading) the low frequency signal. The electron beam reverses its direction after travelling to the end of its trace.

Time Measurement

By using the horizontal markings on the display screen and by setting the main time base of the scope, you can calculate the time between two points on a waveform. This measurement is limited to about a 5 percent accuracy rating.

To increase the accuracy of time measurements, you must use the delay time position control of the scope. The delay will have a multi-turn calibrated dial so the delay can be set precisely.

Figure 8 shows how the delay time setting can be used to measure the period of a square wave. The main time is set at a convenient value that will produce the main waveform as shown. The time delay control is then adjusted to intensify the leading edge "A" of the waveform. When the oscilloscope is on the alternate mode, the intensified part of the waveform is displayed.

The delayed time base is adjusted so its half amplitude point is on a convenient vertical grid line as shown in Figure 8. The delay dial will give you the reading T_1. You can adjust the delay time control to intensify the edge of the waveform and display it in the alternate mode with the half amplitude point at the same grid line as before. Now you will have T_2 from the delay dial. The waveform T is calculated by:

$$T = (t_2 - T_1) \cdot S$$

You can measure the pulse jitter time by, again, measuring the period T as shown in Figure 9. By intensifying edge "A" as shown in Figure 9(b) and measuring t you will get the pulse jitter, J. The formula for this is:

$$J = \frac{100t}{T}$$

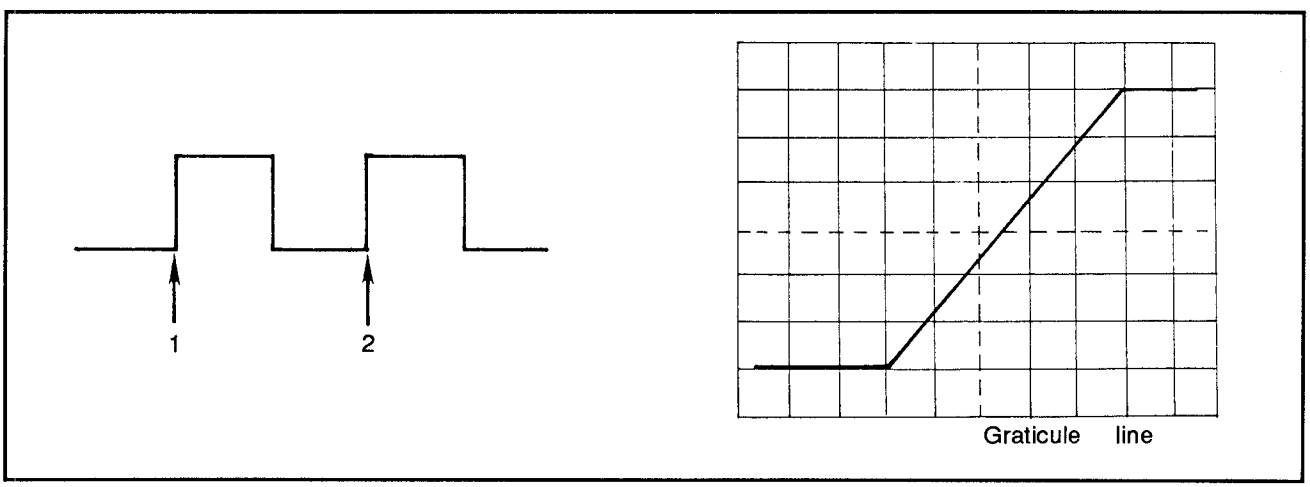

Figure 8: Period measurement of a waveform: (a) square wave (b) display of intensified part of waveform using the delay time base

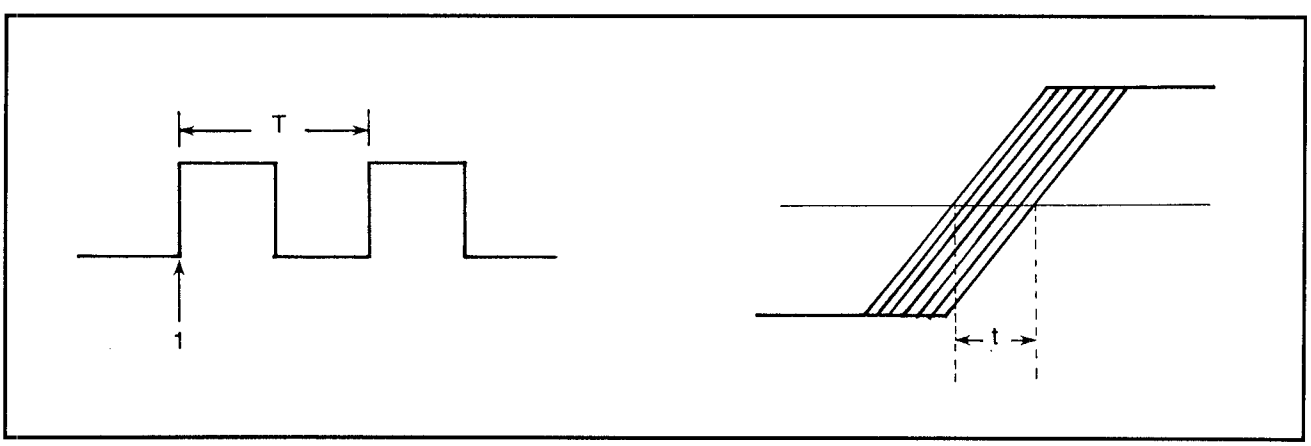

Figure 9: Waveform jitter measurement: (a) square wave (b) display of intensified part of waveform using the delay time base.

By using the delay time base you can measure the pulse rise time. Note the time between the 10 percent and 90 percent amplitude points. If the rise time is being measured, you will need a configuration as shown in Figure 10. Using a pulse generator, the output goes to one of the vertical inputs and the test circuit goes to the other vertical input. A correction must be made for the finite pulse rise time (t_p) of the generator and the scope. t_p is the rise time of the generator; t_o, the rise time of the scope; and t_m, the rise time of the circuit being tested. The actual rise time is calculated by:

$$\frac{t_t - [t_m^2 - t_o^2 - t_p^2] - 1}{2}$$

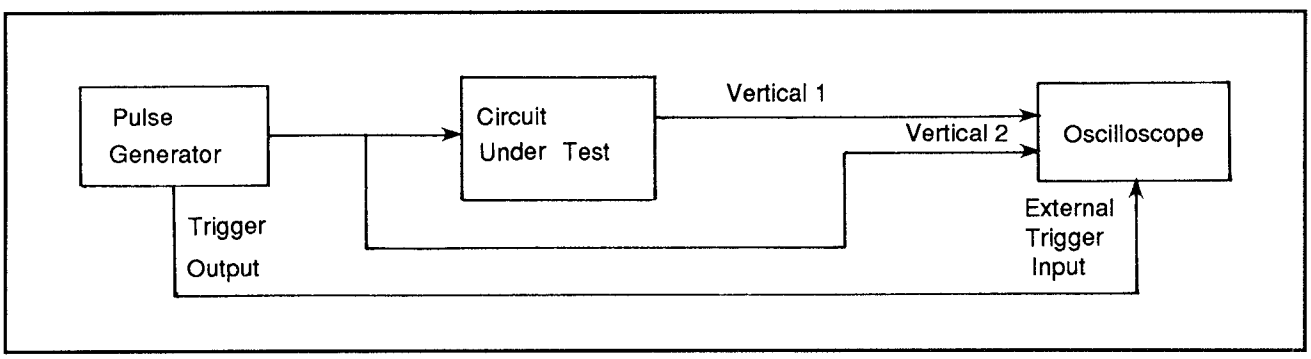

Figure 10: Measuring the rise time

Phase Measurement

To measure phase shift between two waveforms, two inputted signals are displayed in alternate mode and overlaid. The sweep speed is set to provide a favorable display to measure t and T as shown in Figure 11. The phase difference between the two waveforms can then be calculated by:

$$P = 360 \cdot \frac{t}{T}$$

Another way to measure the phase shift is by using the Lissajous figures shown in Figure 12. Figure 13 shows how to hook the circuit under test to the scope. A straight line is obtained when the phase difference is either 0 degrees or 180 degrees. When the two amplitudes are equal, the angle to the horizon is 45 degrees. The tilt angle θ is determined by:

$$\theta = \tan^{-1} \cdot \frac{\text{vertical voltage}}{\text{horizontal voltage}}$$

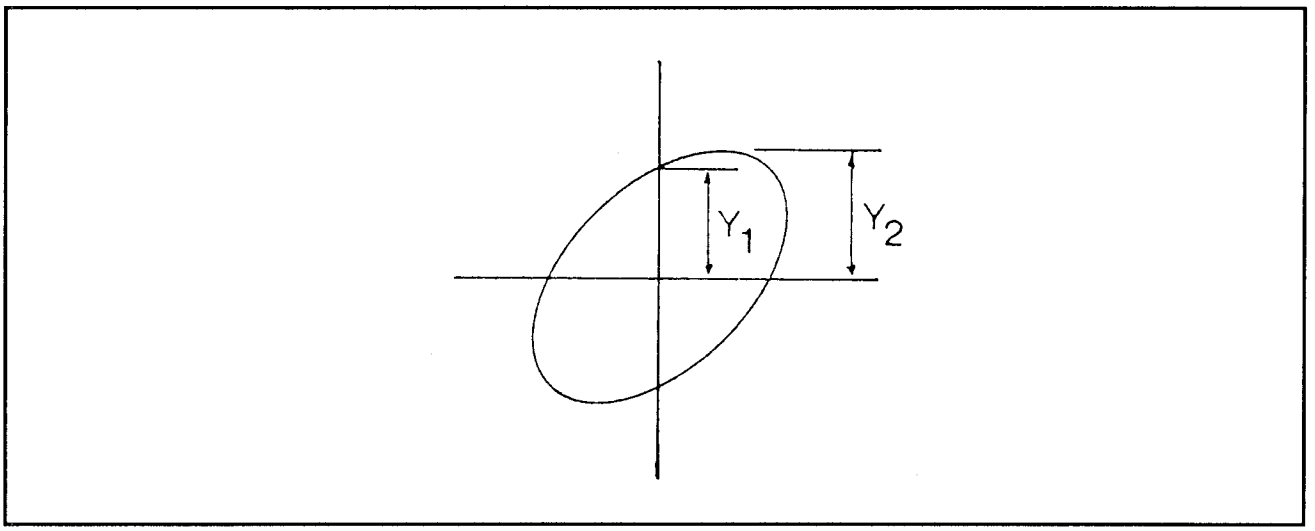

Figure 11: Measuring phase difference

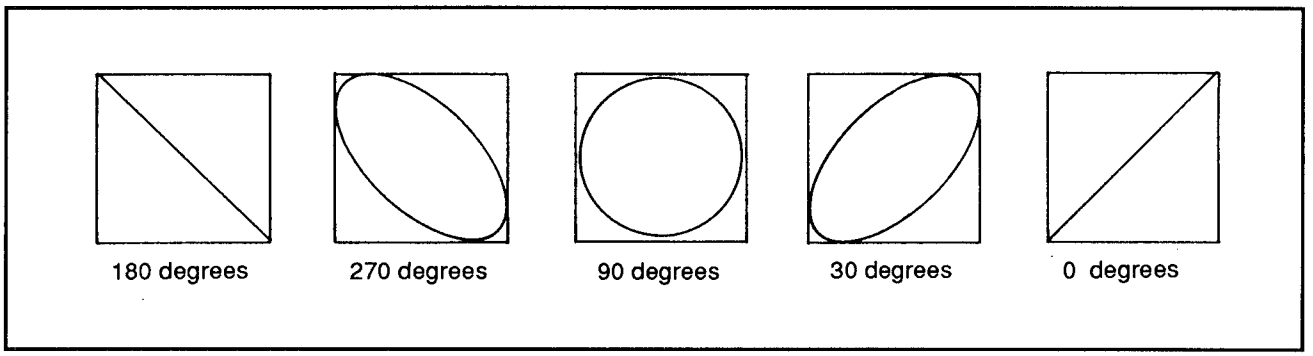

Figure 12: Lissajous figures with the effect of phase shift: (a) 0°, (b)30° or 330°, (c) 90° or 270°, (d) 150° or 210°, (e) 180°

If the horizontal voltage input is higher than the vertical input, then the angle to the horizontal will be less than 45°.

A circle is obtained for either a 90° or 270° phase shift when the amplitudes of the two inputs are the same. If they are not the same, then an ellipse will be produced, with the main axis along the vertical or horizontal depending on which has the greater amplitude.

Figure 14 shows the phase angle between two signals that can be determined. The gains of the horizontal and vertical amplifiers usually will be adjusted so that the ellipse fits into the box shown.

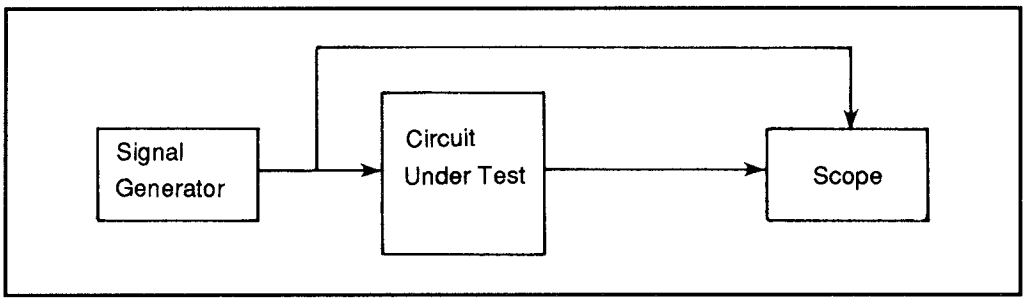

Figure 13: Hooking the circuit to the oscilloscope

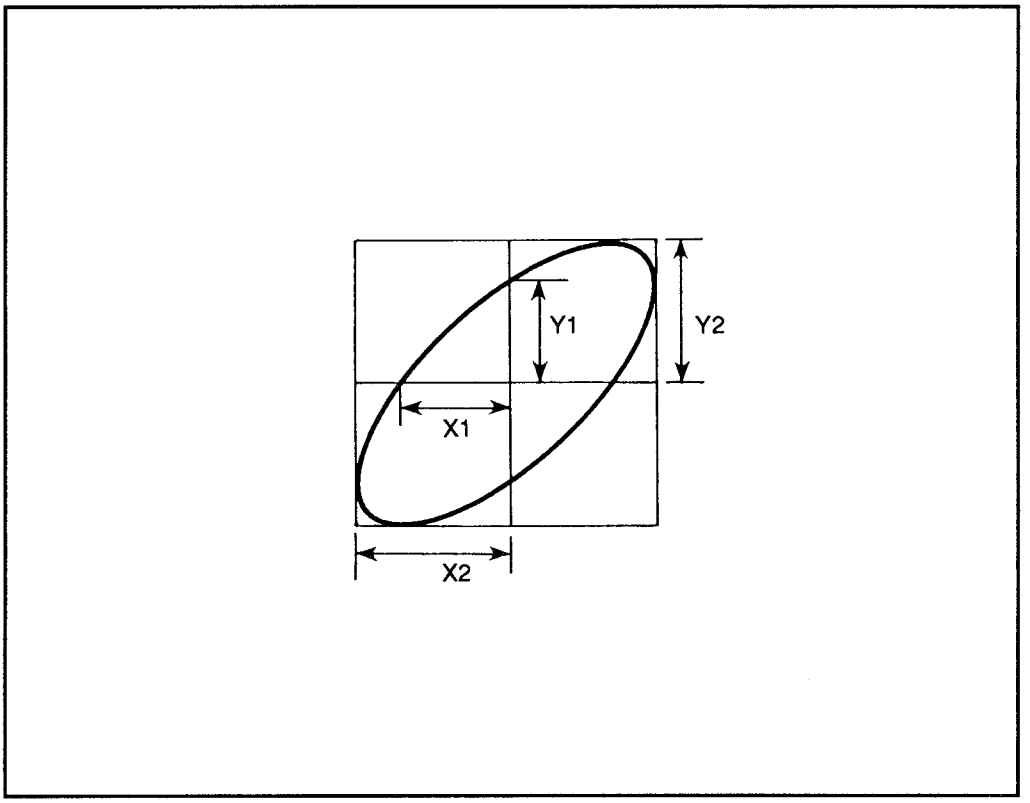

Figure 14: Phase angle shift using Lissajous figures

Waveform Analyisis

All waveforms can be classified into either sinusoidal or complex types. Figure 15 shows a sine wave and several complex waveforms. A sine wave will have RMS, peak, and peak-to-peak values. A sine wave's positive and negative peak values are equal, and the peak-to-peak of the wave is double that of the peak value.

Sine waves are characterized by amplitude, phase and frequency. Figure 16 shows

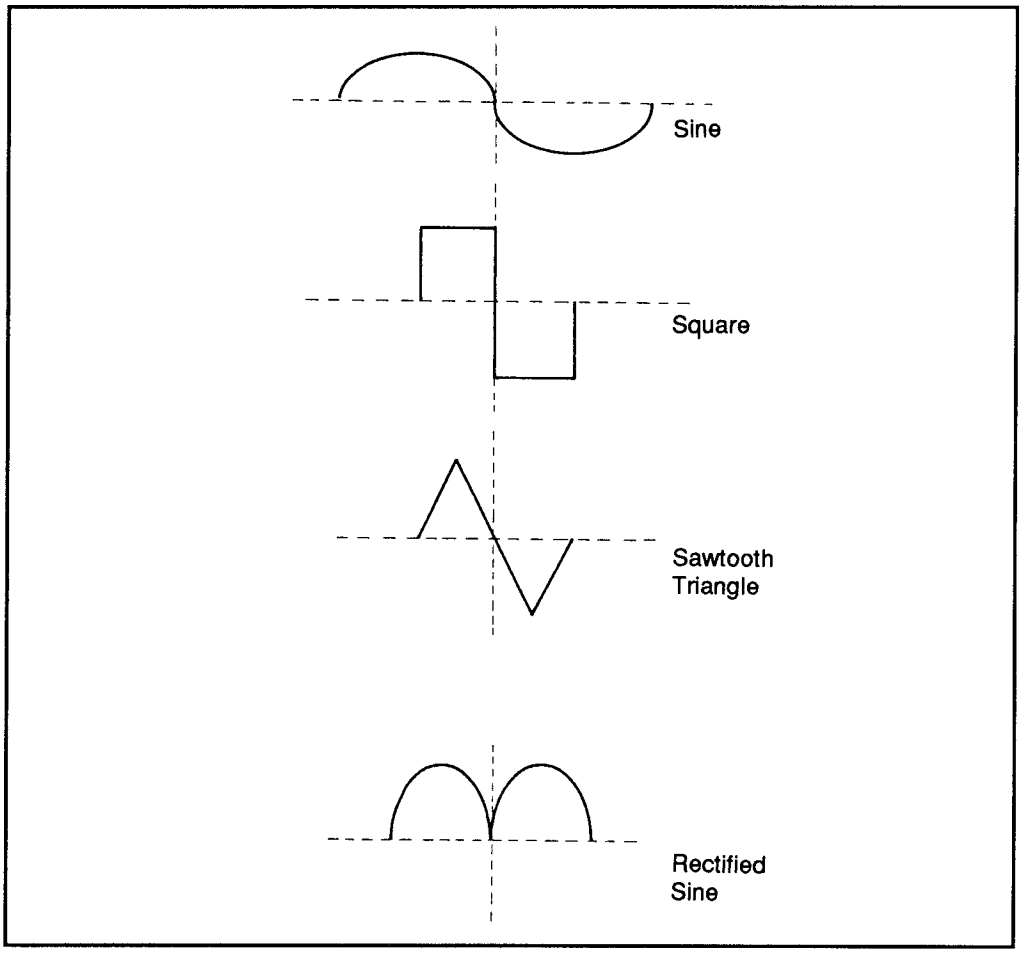

Figure 15: Sine wave and miscellaneous complex waveforms

the variation of frequency and amplitude of a sine wave. Figure 17 shows a waveform with leading and lagging voltages. Both waveforms have the same frequency, but different amplitudes. Waveforms that have different frequencies have a fixed-phase relation.

The most basic of the complex waves is the square wave. A square wave is the sum of many sine waves and is illustrated in Figure 18.

The wave contains odd harmonics that are in phase with the fundamental wave and with each other in the typical square waveform.

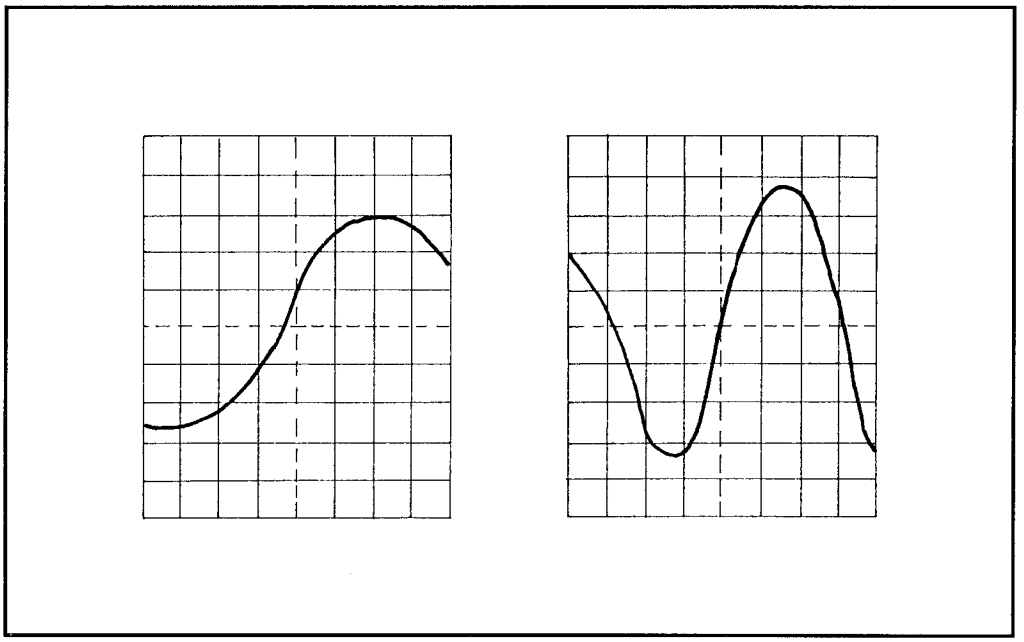

Figure 16: Sine wave with varied frequency and amplitude

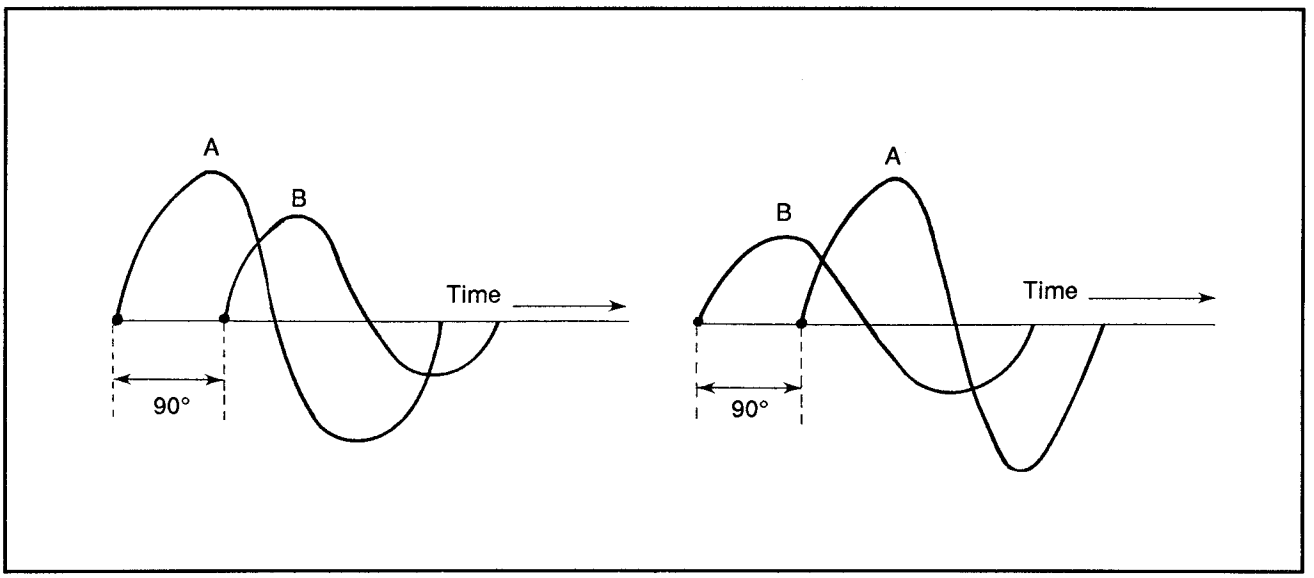

Figure 17a: Waveform with leading and lagging voltages

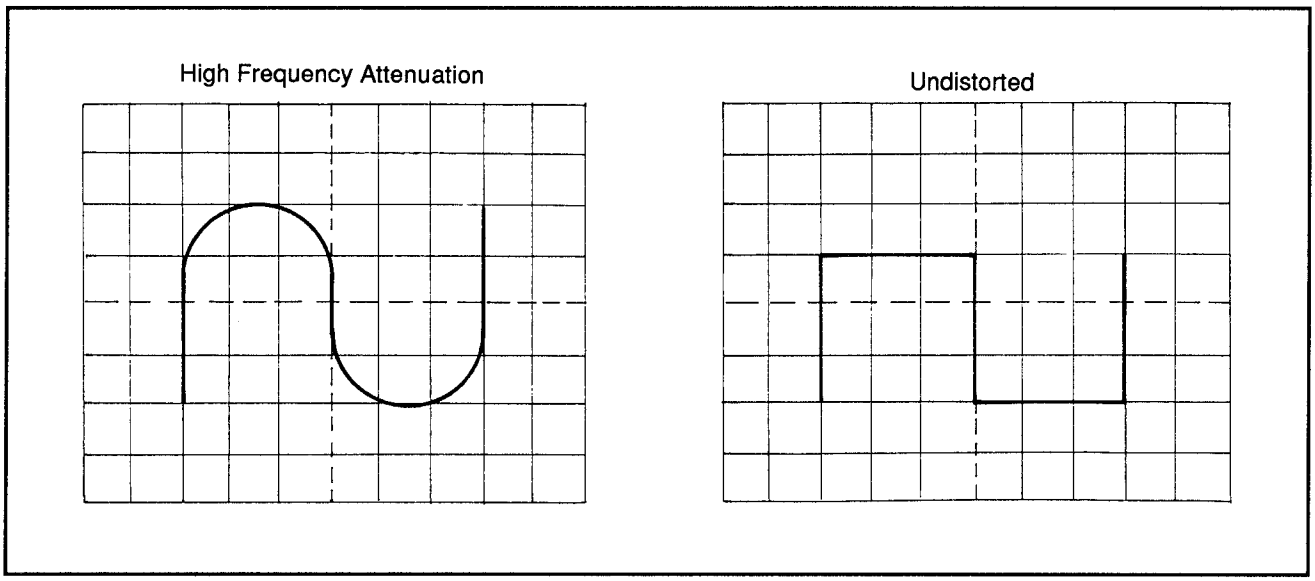

Figure 17b

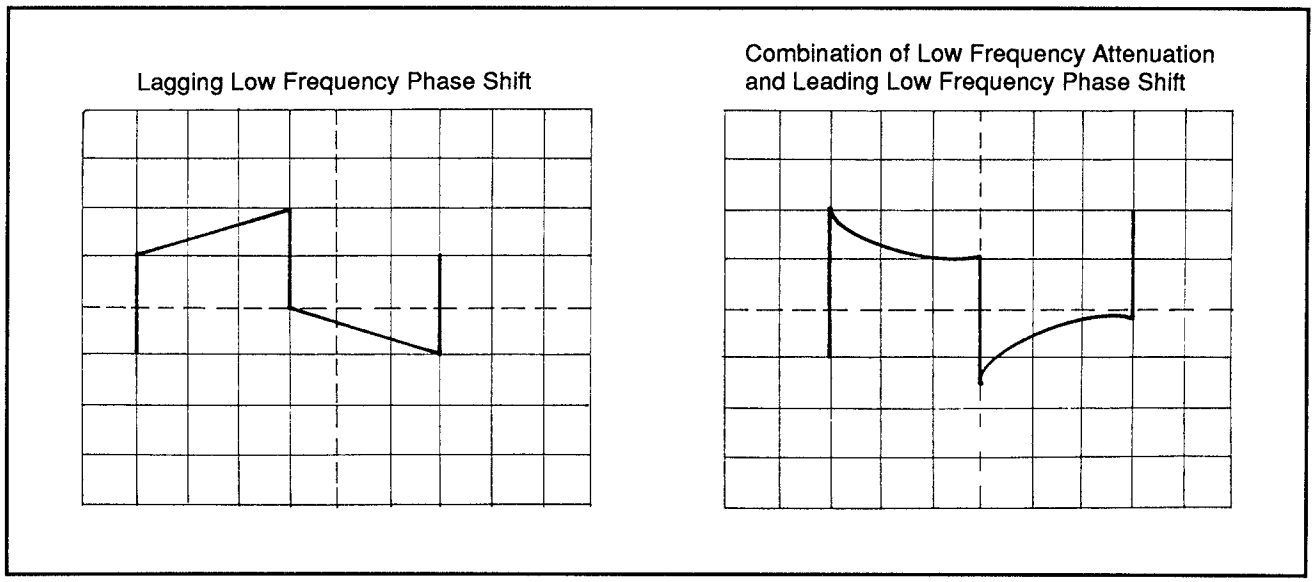

Figure 17c

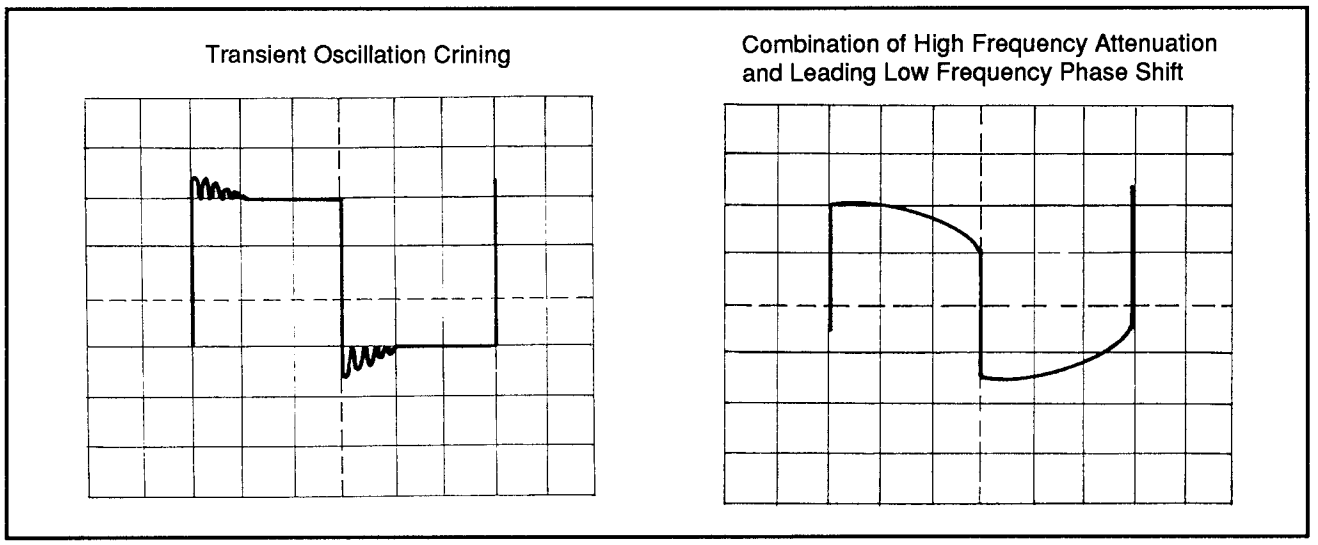

Figure 17d

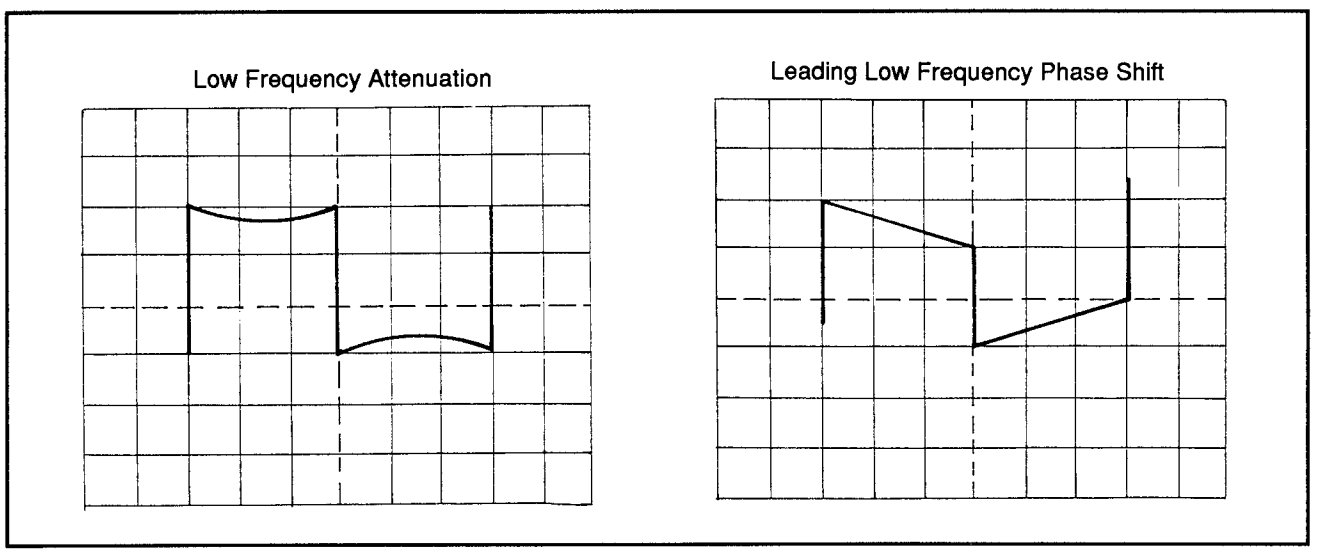

Figure 17e

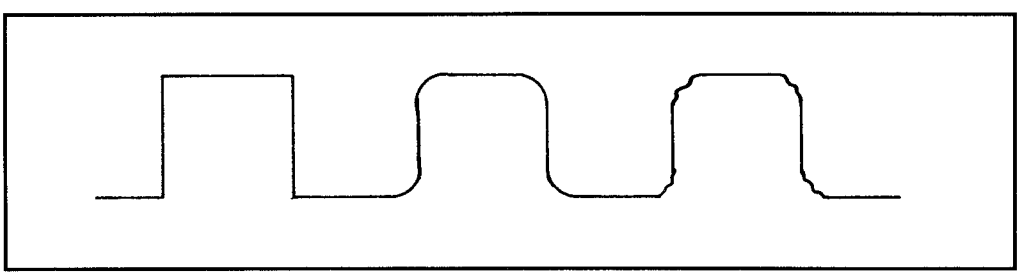

Figure 18: Square wave

4/3 - TEP
Test Equipment Probes

Understanding Test Equipment Probes

Anyone who uses an oscilloscope also uses the oscilloscope probes. Probes connect the measurement test points in a device under test (DUT) to the inputs of the oscilloscope. As you may know, achieving optimized system performance depends on selecting the proper probe. Connecting a scope to the DUT with a couple of wires would not let you realize the full capabilities of the scope. But let's begin this article by making that assumption and let's evolve into our "ultimate" ideal probe, step-by-step, examining all factors, including design trade-offs, affecting probe performance.

Why Not Use a Couple of Pieces of Wire?

There are legitimate reasons for not using a couple of wires. Some low-bandwidth scopes and special purpose plug-in amplifiers provide only binding post input terminals, a convenient means of attaching wires of various lengths.

DC levels associated with battery-operated equipment could be measured. Low frequency (audio) signals from the same equipment and some high output transducer could also be examined. However, this type of connection should be kept away from line operated equipment for two basic reasons, safety and risk of equipment damage.

Safety

Attachment of hookup wires to line-operated equipment could impose a health hazard, either because the "hot" side of the line itself could be accessed, or because internally generated high voltages could be contacted. In both cases, the hookup wire offers you virtually no protection, either at the equipment source or at the scope's binding posts.

Risk of Damage

Two unidentified hookup wires, one signal lead and one ground, could cause havoc in line-operated equipment. If the "ground" wire were attached to *any* elevated signal in line-operated equipment, various degrees of damage would result simply because both the scope and the equipment are (or should be) on the same 3-wire outlet system. Also, short circuit continuity is completed through one common ground.

Circuit loading by the test equipment (scope-probe) is a combination of resistance and capacitance. Without the benefit of using an attenuator (10X) probe, the loading on the DUT will be 1 MΩ (the scope input resistance) and more than 15 pF, which is the typical scope input capacitance plus the stray capacitance of the hookup wire.

Figure 1 shows what a "real world" signal from a 500 Ω impedance source looks like when loaded by a 10 MΩ, 10 pF probe. The scope-probe system is 300 MHz, observed risetime is 6 ns.

Figure 2 shows the same signal when it is accessed by two 2-meter lengths of hookup wire. Loading is 1 MΩ (the scope input resistance) and about 20 pF (the scope input capacitance, plus the stray capacitance of the wires). Observed risetime has slowed to 10 ns and the transient response of the system has become unusable. Figures 3 and 4 show typical low-Z and hi-Z probes attached to a source, respectively.

Susceptibility to External Pickup

An unshielded piece of wire acts as an antenna for the pickup of internal fields, such as line frequency interference, electrical noise from fluorescent lamps, radio stations, and signals from nearby equipment. These signals are not only injected into the scope along with the desired signal, but can also be injected into the DUT itself.

The source impedance of the DUT has a major effect on the level of interference signals developed in the wire. A very low source impedance tends to shunt any

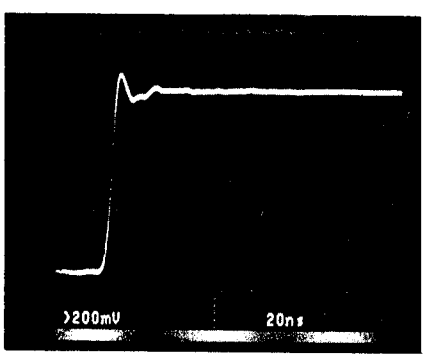

Figure 1: A signal from a 500 Ω impedance with a 10 MΩ, 10 pf probe.

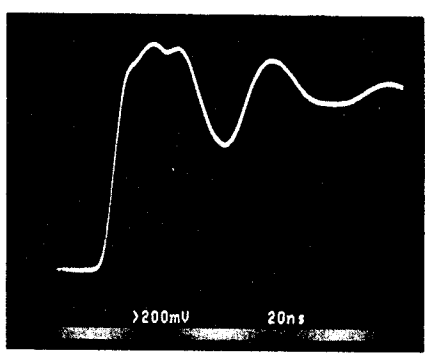

Figure 2: The same signal with a 2-meter long probe, note the effects of stray capacitance.

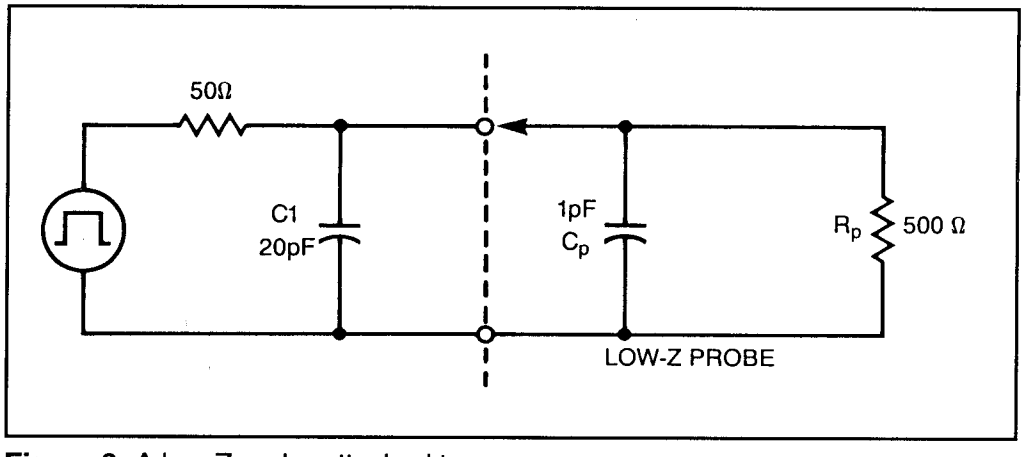

Figure 3: A low-Z probe attached to a source.

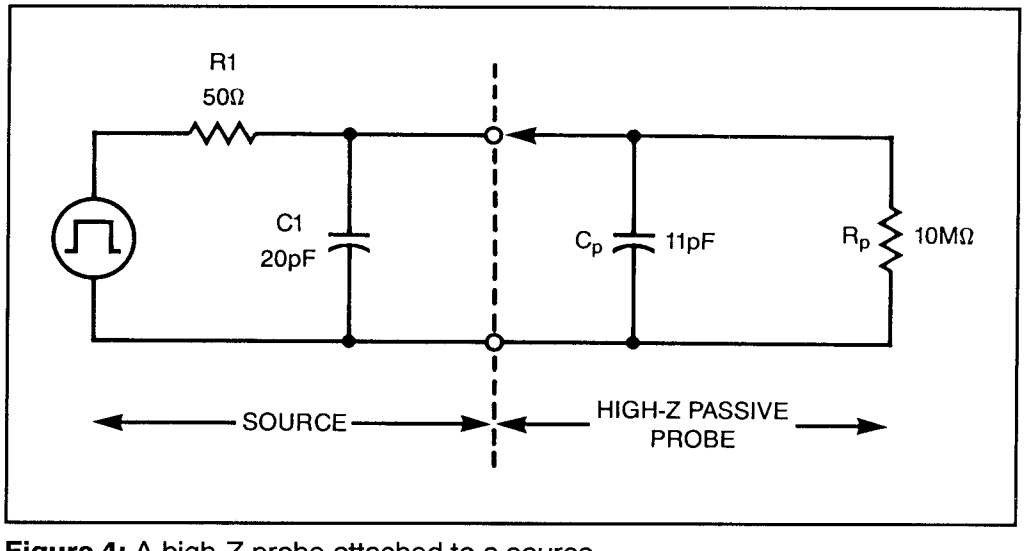

Figure 4: A high-Z probe attached to a source

induced voltages to ground, but high frequency signals can still appear at the scope input and mask the desired signal. Use a probe here which, in addition to its other features, provides coaxial shielding of the center conductor and virtual elimination of external field pickup.

Figure 5 shows what a low-level signal from a high impedance source (100 mV from 100 KΩ) looks like when accessed by a 300 MHz scope-probe system.

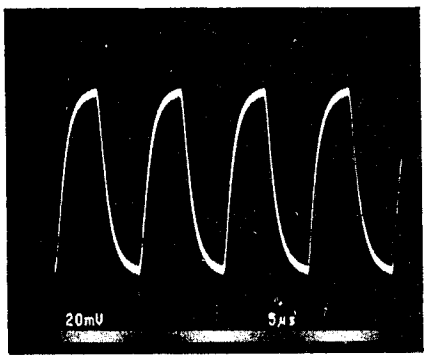

Figure 5: A low-level signal from a high impedance source.

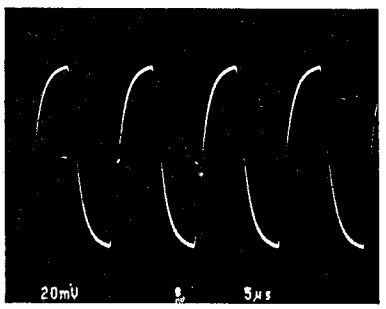

Figure 6: The same signal with the bandwidth limit switch engaged on the scope.

Loading is 10 MΩ and 10 pF. This is a true representation of the signal, except the probe's resistive loading has reduced the amplitude by about 1%. The observed high frequency noise is part of the signal at the high impedance test point and would normally be removed by using the BW (bandwidth) limit button on the scope (see Figure 6).

If you look at the test point with the same two pieces of wire, two things happen: The amplitude drops due to the increased resistive and capacitive loading, and noise is added to the signal because the hookup wire is completely unshielded (see Figure 7). Most of the observed noise is line frequency interference from fluorescent lamps in the test area.

Probably the most annoying effect of using hookup wire to observe high frequency signals is unpredictability. Any touching or rearrangement of the leads can produce different and nonrepeatable effects on the observed display.

Benefits of Using Probes

Probes Help Minimize Loading

To a certain extent, all probes load the DUT — the source of the signal you are measuring. Still, probes offer the best means of making the needed connections. A simple piece of wire, as we have just seen, would severely load the DUT; in fact, the DUT might stop functioning altogether.

Probes are designed to minimize loading. Passive, non-attenuating 1X probes offer the highest capacitive loading of any probe type. Even these, however, are

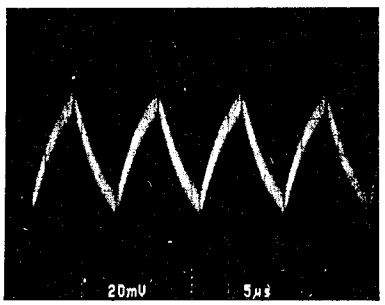

Figure 7: A "fuzzy" signal caused by a totally unshielded hookup wire for a probe.

designed to keep loading as low as possible (see Figure 8).

Besides reducing capacitive and resistive loading, a standard passive 10X (ten times attenuation) probe extends the on-screen viewability of signal amplitudes by a factor of ten (see Figure 9).

A typical scope minimum sensitivity is 5 V/division. Assuming an 8-division vertical graticule, a 1X probe (or a direct connection) would allow on-screen viewing of 40 Vp-p maximum. The standard 10X passive probe provides 400 Vp-p viewing. Following the same line, a 100X probe should allow 4 kV on-screen viewing. However, most 100X probes are rated at 1.5 kV to limit power dissipation in the probe itself.

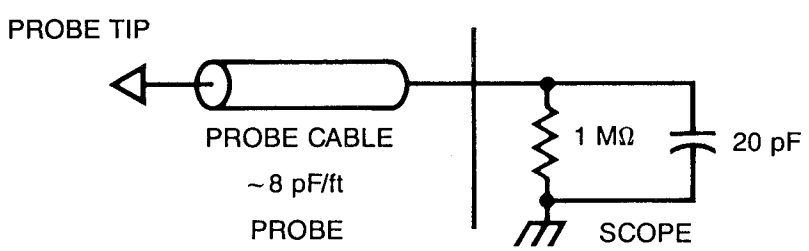

Figure 8: A typical 1X probe.

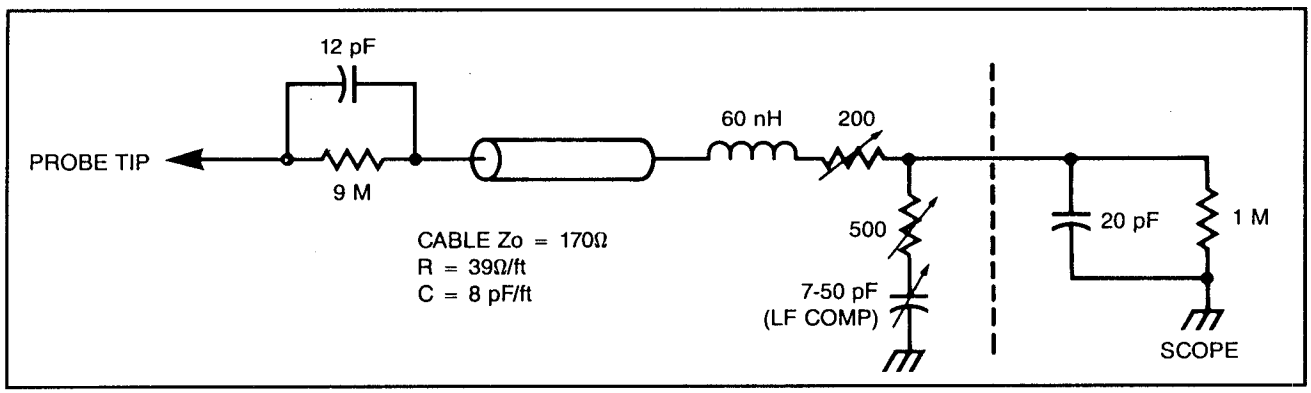

Figure 9: A typical 10X probe.

Check the Specs

Bandwidth is the probe specification most users look at first, but plenty of other features also help to determine which probe is right for your application. Circuit loading, signal aberrations, probe dynamic range, probe dimensions, environmental degradation and ground-path effects will all impact the probe selection process.

Probes affect your measurements by loading the circuit that you are examining. The loading effect is generally stated in terms of impedance at some specific frequency, and is made up of a combination of resistance and capacitance.

Source Impedance

Obviously, source impedance will have a large impact on the net effect of any specific probe loading. For example, a device under test with a near zero output impedance would not be affected in terms of amplitude or rise time to any significant degree by the use of a typical 10X passive probe. However, the same probe connected to a high impedance test point, such as the collector of a transistor, could affect the signal in terms of rise time and amplitude.

Capacitive Loading

To illustrate this effect, let's take a pulse generator with a very fast rise time. If the initial rise time is assumed to be zero ($t_r = 0$), the output t_r of the generator would be limited by the associated resistance and capacitance of the generator. This integration network produces an output rise time equal to 2.2 RC. This limitation is derived from the universal time-constant curve of a capacitor.

Figure 10 shows the effect of internal source resistance and capacitance on the equivalent circuit. At no time can the output rise time be faster than 2.2 RC or 2.2 ns. If a typical probe is used to measure this signal, the probe's specified input capacitance and resistance is added to the circuit as shown in Figure 11.

Because the probe's 10 MΩ resistance is much greater than the generator's 50 Ω output resistance, it can be ignored.

Figure 12 shows the equivalent circuit of the generator and probe, applying the 2.2 RC formula again. The actual rise time has slowed from 2.2 ns to 3.4 ns. To find the percentage change in rise time due to the added probe tip capacitance, you would use the following formula:

$$\%\text{change} = (t_{r2} - t_{r1}) / t_{r1} \times 100 = (3.4 - 2.2) / 2.2 \times 100 = 55\%$$

Another way of estimating the affect of probe tip capacitance on a source is to take the ratio of the probe tip capacitance (marked on the probe compensation box) to the known or estimated source capacitance. Using the same values:

$$C_{\text{probe tip}} / C_1 \times 100 = 11 \text{ pF} / 20 \text{ pF} \times 100 = 55\%$$

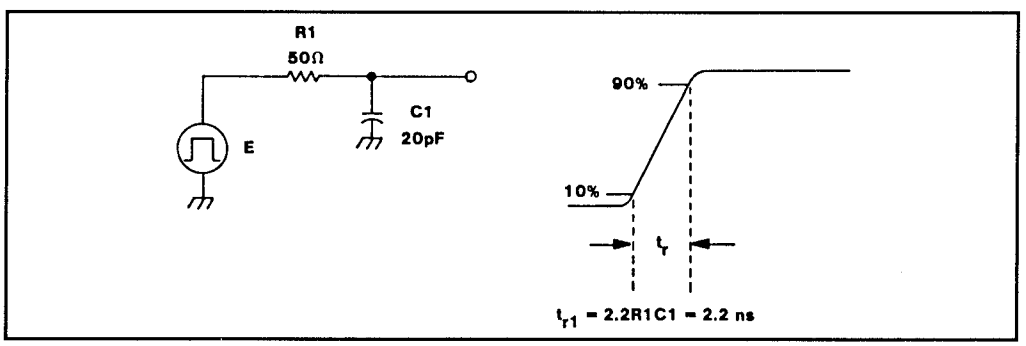

Figure 10: An illustration of the effects of internal resistance and capacitance on an equivalent circuit.

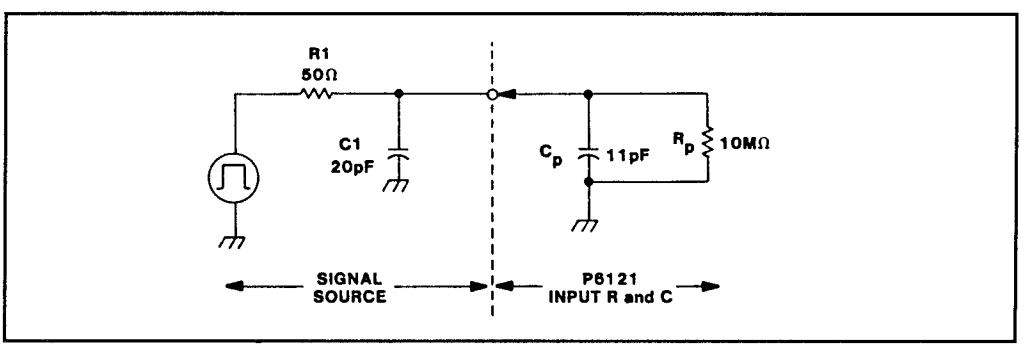

Figure 11: Adding the impedance characteristics of the probe to the circuit under test.

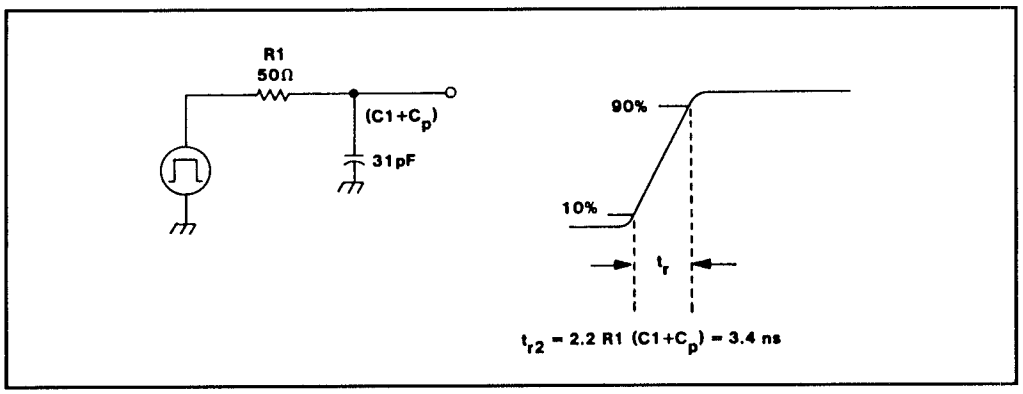

Figure 12: Observing how a probe affects rise time.

Any added capacitance slows the source rise time when using high impedance passive probes. In general, the greater the attenuation ratio, the lower the tip capacitance. Below are some examples.

Capacitive Loading: Sine Wave

When probing continuous wave (CW) signals, the probe's capacitive reactance at the operating frequency must be taken into account. The total impedance, as seen at the probe tip, is designated R_p and is a function of frequency. In addition to the capacitive and resistive elements, designed-in inductive elements serve to offset the pure capacitive loading to some degree. Figures 13 and 14 show when and when not to use a low-Z probe. In Figure 13, the emitter of a transistor is a low-impedance point. Adding the probe's 500 Ω R_{in} to ground will not significantly change circuit operation. In Figure 14, the probe's 500 Ω R_{in} shunts the transistor's bias circuitry, significantly changing the voltage at the base.

Curves showing typical input impedance versus frequency, or typical X_p and R_p versus frequency are included in most probe instruction manuals. Figure 15A shows the typical input impedance and phase relationship versus frequency of the Tektronix P6203 Active Probe. Note the 10 kΩ input impedance is maintained to almost 10 MHz by careful design of the associated resistive, capacitive and inductive elements. Figure 15B shows a plot of X_p and R_p versus frequency for a typical 10 MΩ passive probe. The dotted line (X_p) shows capacitive reactance versus frequency. The total loading is again offset by careful design of the associated R,C and L elements. If you need a worst-case guide to probe loading, use the following formula:

$$X_p = 1 / 2\pi FC$$

where X_p = Capacitive reactance (ohms)

F = Operating frequency
C = Probe tip capcitance (marked on the probe body or compensation box)

From the graph in Figure 15B, a standard passive 10 MΩ probe has a tip capacitance reactance (X_p) of about 290 Ω at 50 MHz. Depending on the source impedance, this loading could have a major effect on the signal amplitude (by simple divider action), and even on the operation of the circuit itself.

For all practical purposes, a 10X, 10 MΩ passive probe has little effect on to-

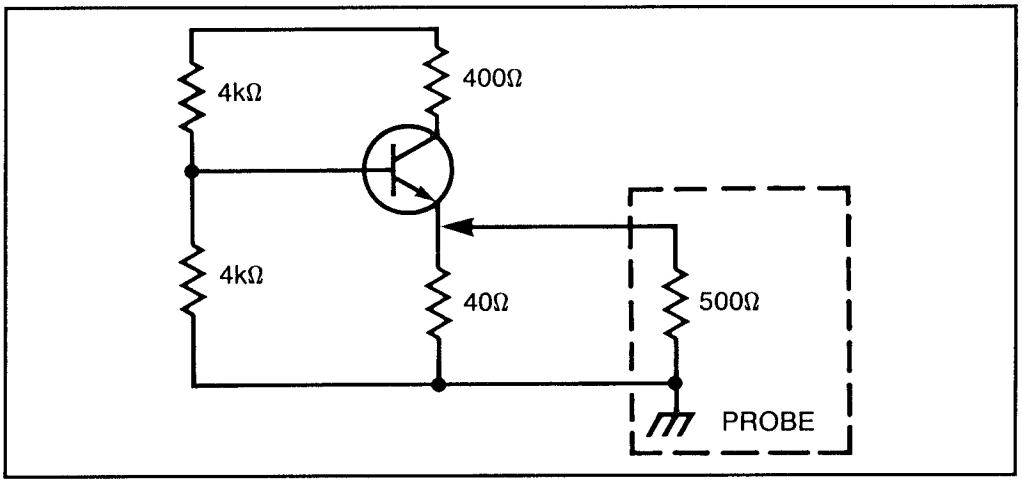

Figure 13: An example of when using a low-Z probe is appropriate.

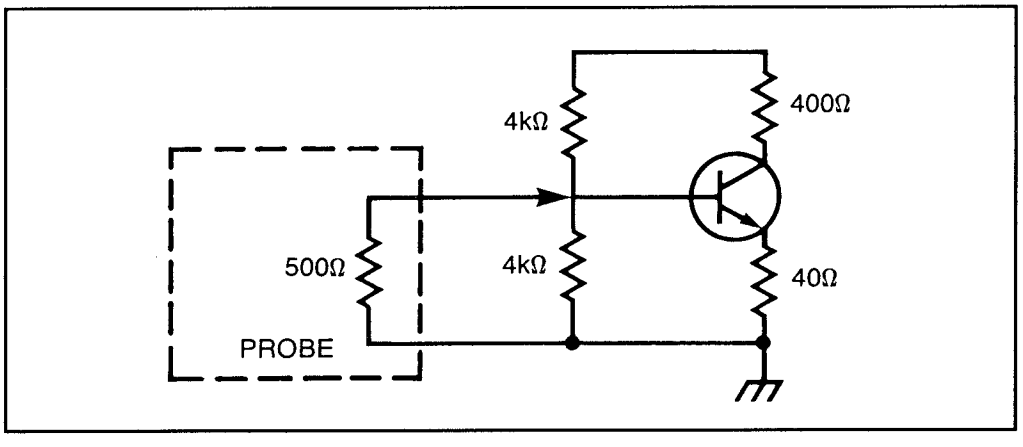

Figure 14: An example of when using a low-Z probe is not appropriate.

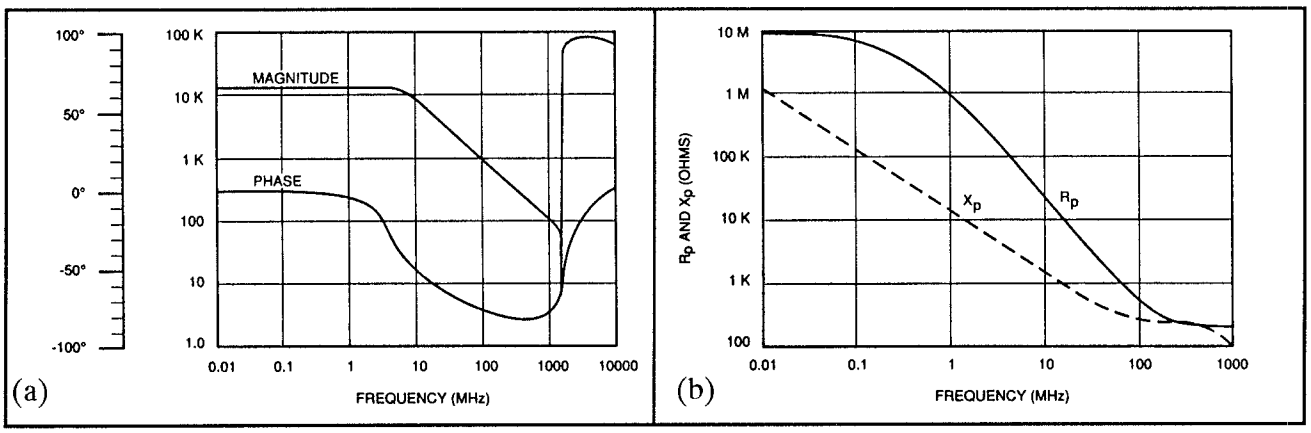

Figure 15: a) an impedance versus frequency graph of an active probe, and b) an impedance versus frequency graph of a passive probe.

day's circuitry in terms of resistive loading. However, they do carry a trade-off in terms of relatively high capacitive loading, as previously described.

Low-Z Passive Probes

A "Low-Z" passive probe offers very low tip capacitance at the expense of very high resistive loading. A typical 10X "50 Ω" probe has an input C of about 1 pF and a resistive loading of 500 Ω. Figure 16 shows the circuit and equivalent model of this type of probe.

This configuration shows a high frequency 10X voltage divider because, from transmission line theory, all that the 450 Ω tip resistor "sees" looking into the cable is a pure 50 Ω resistance, no C or L component. No low frequency compensation is necessary because it is not a capacitive divider. Low-Z probes are typically high bandwidth (up to 3.5 GHz and rise times up to 100 ps) and are best suited for making rise time and transit time measurements. They can, however, affect the pulse amplitude by simple resistive divider action between the source and the load (probe). Because of its resistive loading effects, this type of probe performs best on 50 Ω or lower impedance circuits under test. These probes operate into 50 Ω scope inputs only. They are typically teamed up with fast (500 MHz to 1 GHz) real time scopes or with scopes employing the sampling principle.

Bias/Offset Probes

A bias/offset probe is a special kind of low-Z design with the capability of providing a variable bias or offset voltage at the probe tip. Bias/offset probes are useful for probing high speed ECL circuitry, where resistive loading could upset the operating point.

The Best of Both Worlds: The Active Probe

From the foregoing, it can be seen that the totally "non-invasive" probe does not exist. However, one type of probe comes close — the active probe. In general, this type of probe provides low resistance loading (10 MΩ) with very low capacitive loading (1 to 2 pF). They do have trade-offs in terms of limited dynamic range, but under the right conditions, offer the best of both worlds (see to Figures 17, 18, 19 and 20). The figures show, repectively, a block diagram, the front end of such a probe, an improved front end, and a schematic of a commercially available active probe.

Bandwidth

Bandwidth is the point on an amplitude versus frequency curve where the measurement system is down 3 dB from a starting (reference) level. Figure 21 shows a typical response curve of an oscilloscope system. Scope vertical amplifiers are designed for a Gaussian roll-off at the high end. With this type of response, rise time is approximately related to bandwidth by the following equation:

$$T_r = .35 / BW$$

For convenience, you may also use:

$$\text{Rise time (ns)} = 350 / \text{Bandwidth (MHz)}$$

Note the measurement system is -3 dB (30%) down in amplitude at the specified bandwidth limit. Figure 22 shows an expanded portion of the -3 dB area. The horizontal scale shows the input frequency derating factor necessary to obtain accuracies better than 30% for a specific bandwidth scope. For

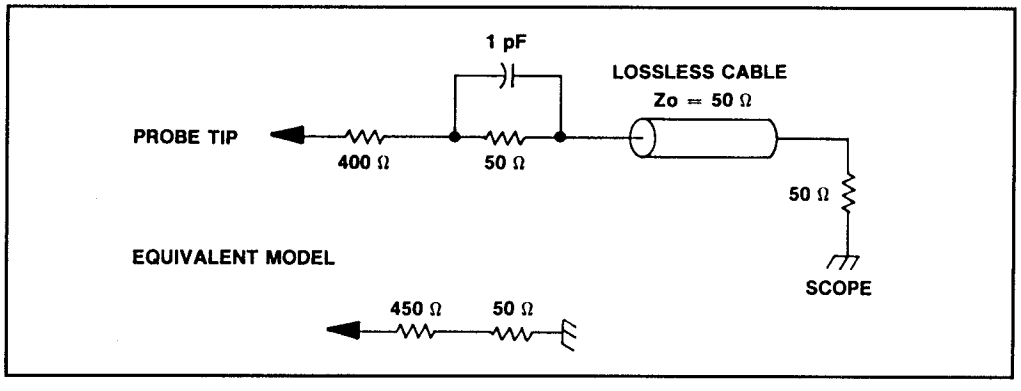

Figure 16: An illustration of how a low-Z probe offers low tip capacitance.

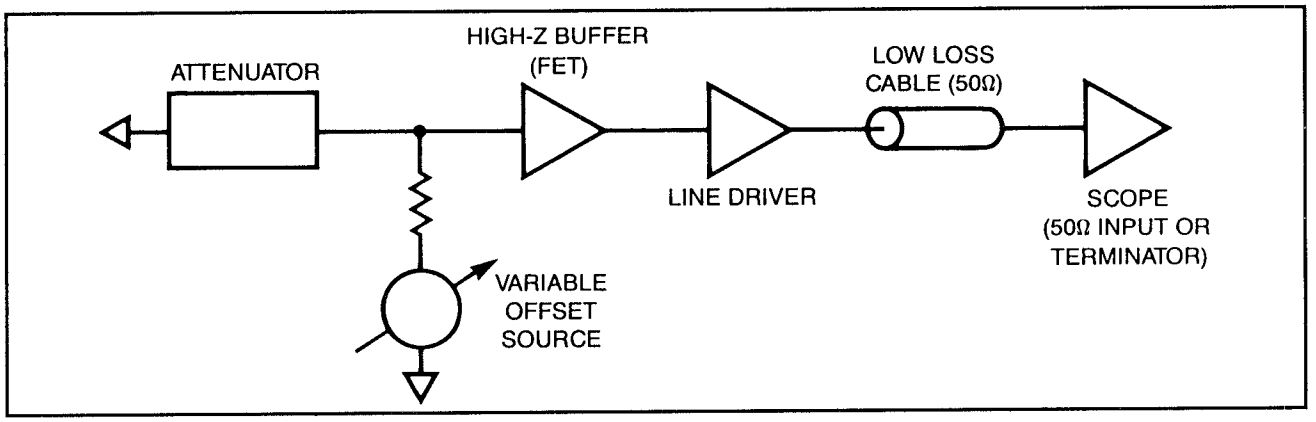

Figure 17: A block diagram of an active probe.

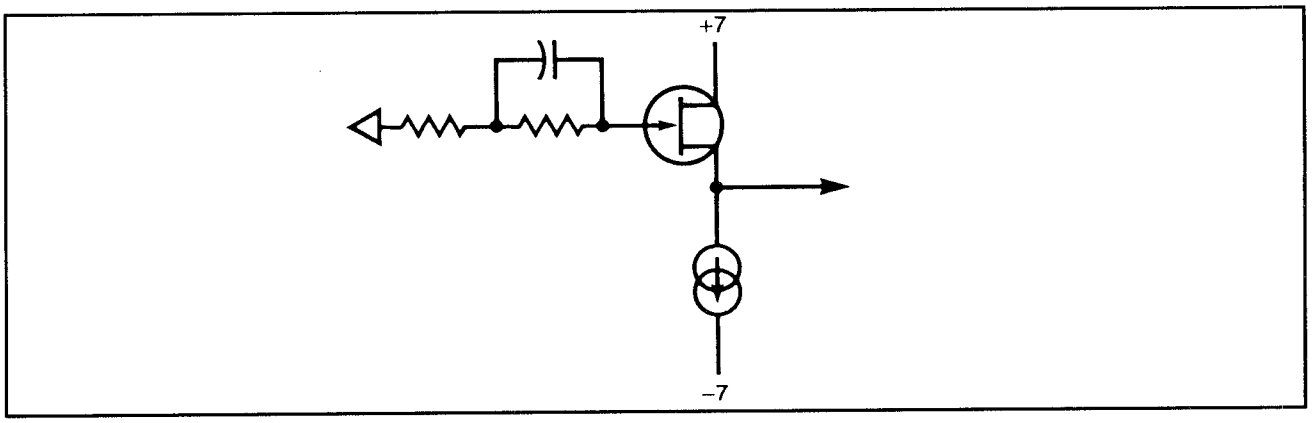

Figure 18: A typical FET front end of an active probe.

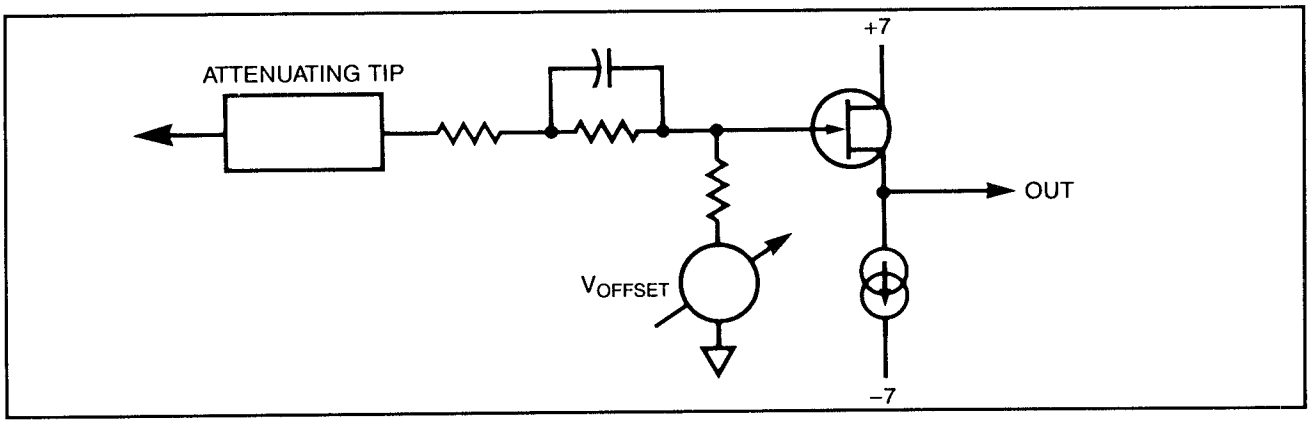

Figure 19: An improved front end of an active probe.

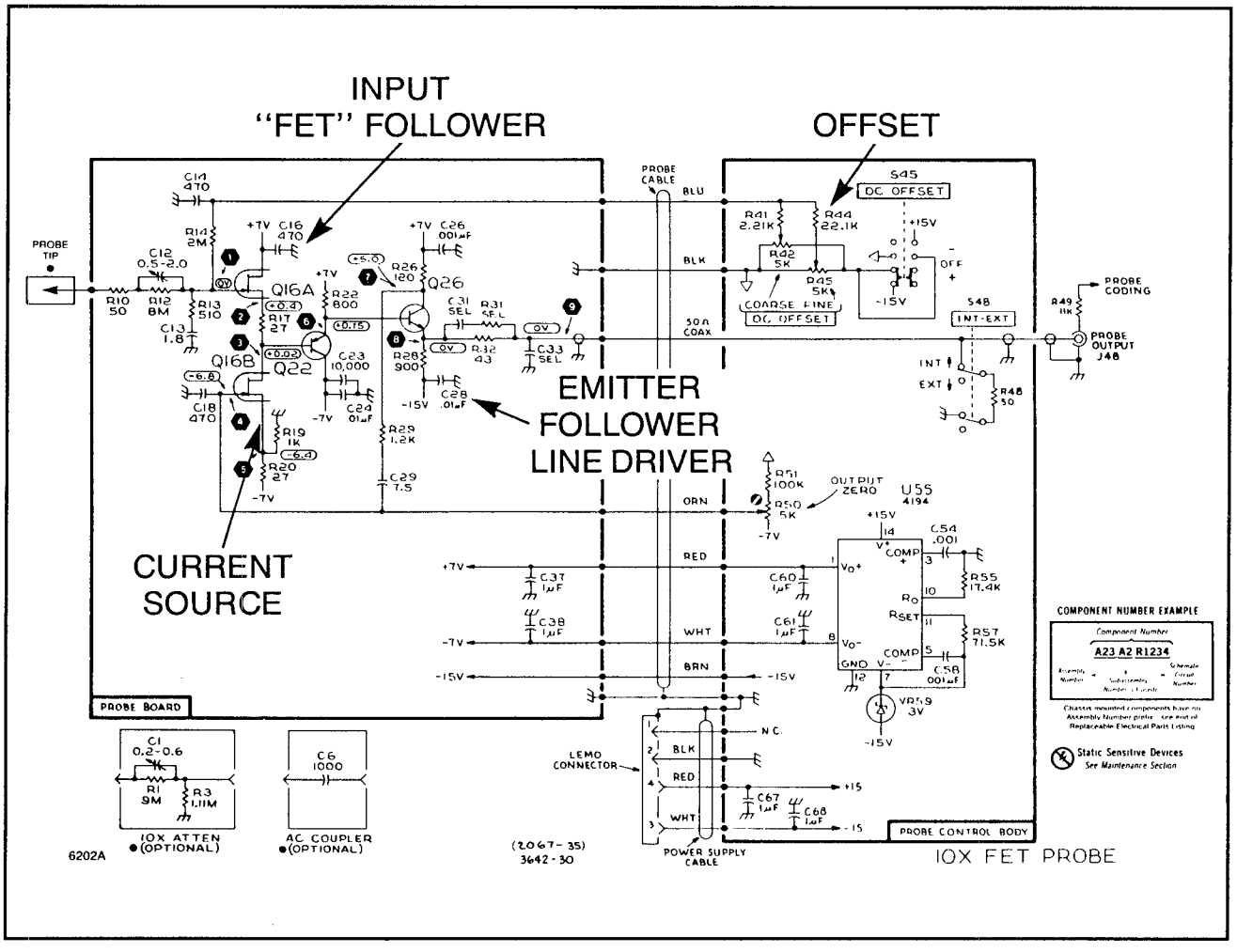

Figure 20: A schematic of a commercially available active probe.

example, with no derating, a "100 MHz" scope will have up to a 30% amplitude error at 100 MHz (1.0 on the graph). If this scope is to have an amplitude accuracy better than 3%, the input frequency must be limited to about 30 MHz (100 MHz / 3).

For making amplitude measurements within 3% at a specific frequency, choose a scope with at least four times the specified bandwidth, as a general rule of thumb.

Probe Bandwidth All probes are ranked by bandwidth. They are like scopes or amplifiers. In these

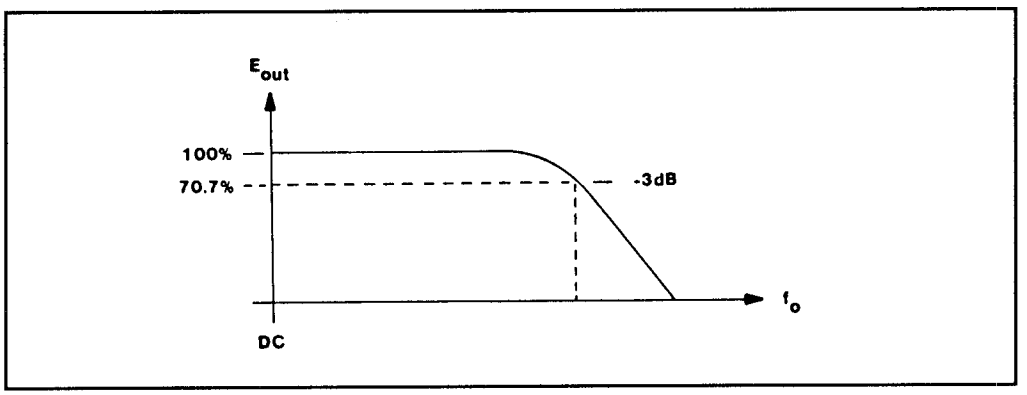

Figure 21: A typical response of an oscilloscope system.

cases we apply the square root of the sum of the squares formula to obtain the "system rise time". This formula states:

$$T_r \text{ displayed} = \sqrt{T_r^2 \text{ source} + T_r^2 \text{ probe} + T_r^2 \text{ scope}}$$

Passive probes do not follow this rule and should not be included in the square root of the sum of the squares formula. Most manufacturers provide a probe bandwidth ranking system specifying "the bandwidth (frequency range) in which the probe performs within its specified limits. These limits include: total aberrations, rise time, and swept bandwidth."

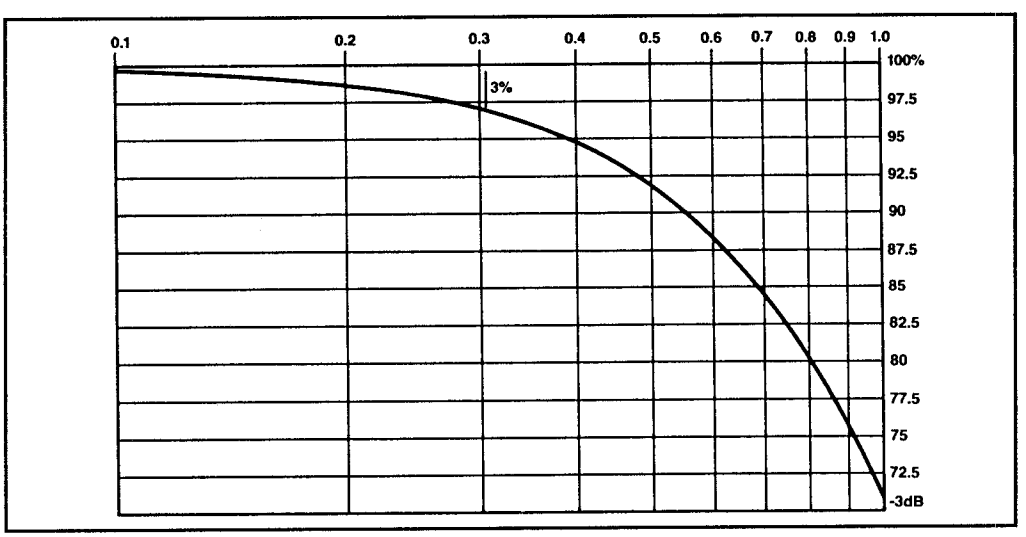

Figure 22: An expanded view of the -3 dB area.

Both the source and the measurement system are specified when checking probe specifications. In general, a "100 MHz" probe provides a 100 MHz performance (-3 dB) when used on a compatible 100 MHz scope. It provides full scope bandwidth *at the probe tip.* However, not all probe/scope systems can follow this general rule. Table 1 shows examples of Tektronix scopes and their recommended passive probes.

Test Methods

As with all specifications, matching test methods must be employed to obtain specified performance. With bandwidth and rise time measurements, it is essential to connect the probe to a properly terminated source. Tektronix specifies a 50 Ω source terminated in 50 Ω, making this a 25 Ω source impedance (see Figure 23). Furthermore, the probe must be connected to the source via a proper probe tip-to-BNC adapter.

Scope Bandwidth at the Probe Tip?

Most manufacturers of general purpose oscilloscopes with standard accessory probes in the package, promise and deliver the advertised scope bandwidth *at the probe tip.* For example, the Tektronix 2465B 400 MHz Portable Oscilloscope and its standard accessory P6317 Passive Probes deliver 400 MHz (-3 dB) at the probe tip.

However, not all high performance scopes can offer this feature, even when used with their recommended passive probes. For example, the Tektronix 11A32 400 MHz plug-in has a system bandwidth of 300 MHz when used with its recommended P6134 passive probe. This is because even the highest impedance passive probes are limited to about 300 to 350 MHz, while still meeting their other specifications. This performance is only obtainable under

SCOPE	BW (1 MΩ input)	PROBE	BW	SYSTEM
2235	100	P6109	150	100
2245A	100	P6109	150	100
2246A	100	P6109	150	100
2445B	150	P6133 Opt 25	150	150
485	350	P6106A	250	250
2465B	400	P6137	400	400
2467B	400	P6137	400	400

Table 1: Examples of accurate scope/probe combinations.

strictly controlled, and industry recognized conditions. These are that the signal must originate from a 50 Ω back-terminated source (25 Ω), and the probe must be connected to the source by means of a probe tip-to-BNC (or other) adapter.

This method ensures the shortest ground path and necessary low impedance to drive the probe's input capacitance, and to provide the specified bandwidth at the signal acquisition point, the probe tip. Real-world signals rarely originate from 25 Ω sources, so less than optimum transient response and bandwidth should be expected when measuring higher impedance circuits.

How Ground Leads Affect Measurements

A ground lead is a wire providing a local ground-return path when you are measuring any signal. An inadequate ground lead (one that is too long or too high in inductance) can reduce the fidelity of the high frequency portion of the displayed signal.

When making *any* measurement, some form of ground path is required to make a basic 2-terminal connection to the DUT. If you want to check the presence or absence of signals from low-frequency equipment, *and* if the equipment is line-powered and plugged into the same outlet system as the scope, then the common 3-wire ground system provides the signal ground return. However, this indirect route adds inductance in the signal path — it can also produce ringing and noise on the displayed signal and is not recommended.

When making any kind of absolute measurement, such as amplitude, rise time or time delay measurements, you should use the shortest grounding path possible, consistent with the need to move the probe among adjacent test points. The ultimate grounding system is an in-circuit ECB (etched circuit board)-to-probe tip adapter. You can purchase these for either miniature, compact or subminiature probe configurations.

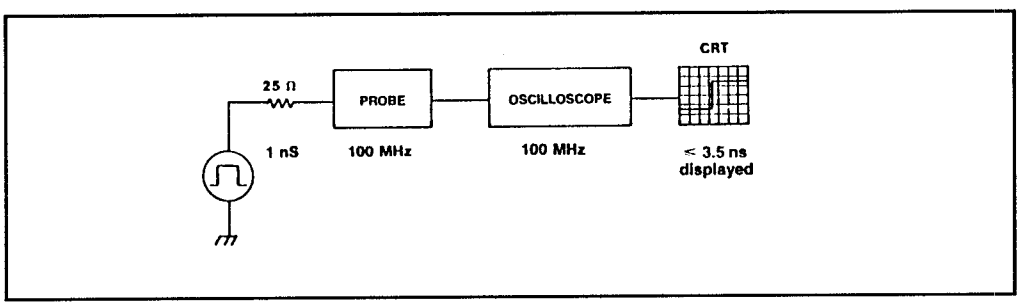

Figure 23: An equivalent circuit of a typical test setup.

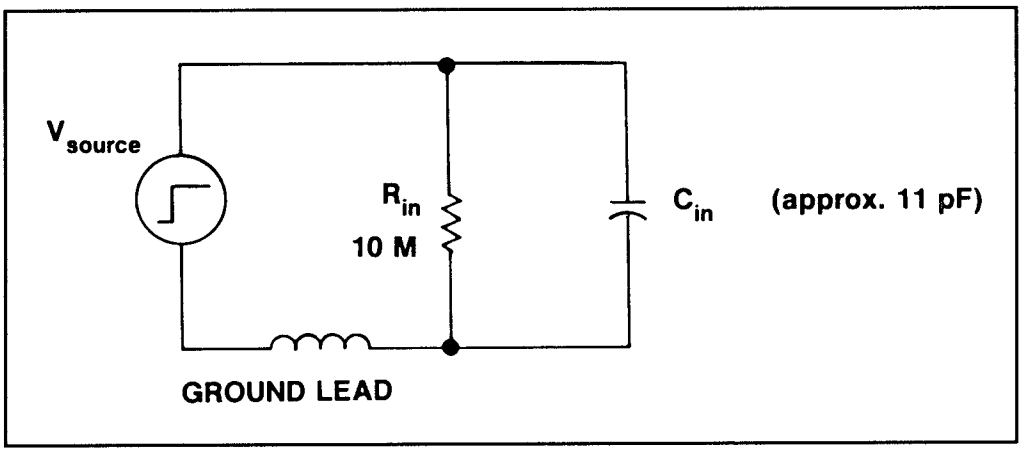

Figure 24: An equivalent circuit of a typical passive probe connected to a source, including ground lead inductance.

Figure 24 shows an equivalent circuit of a typical passive probe connected to a source. The ground lead L and C form a series resonant circuit with only 10 MΩ for damping. When hit with a pulse, it will ring. Also, excessive L in the ground lead will limit the changing current to C, thus limiting the rise time.

Without going into the mathematics, an 11 pF passive probe with a 6-inch ground lead would ring at about 140 MHz when excited by a fast pulse. As the ring frequency increases, it tends to get outside the passband of the scope and is greatly attenuated. So to increase the ring frequency, use the shortest ground lead possible and use a probe with the lowest input C.

Probe Ground Lead Effects

The effect of inappropriate grounding methods can be demonstrated several ways. Figure 25 shows the effects of a 12-inch ground lead when used on various bandwidth scopes.

In Figure 25A, the display on the 15 MHz scope looks okay because the ringing aberrations are beyond the passband of the instrument and are greatly attenuated. Figures 25B and 25C show what the same signal looks like on 50 MHz and 100 MHz scopes.

Even with the shortest ground lead, the probe-DUT interface has the *potential* to ring. The potential to ring depends on the speed of the step function. The ability to see the resultant ringing depends on the scope system bandwidth.

Figures 26A through F show the effects of various grounding methods and

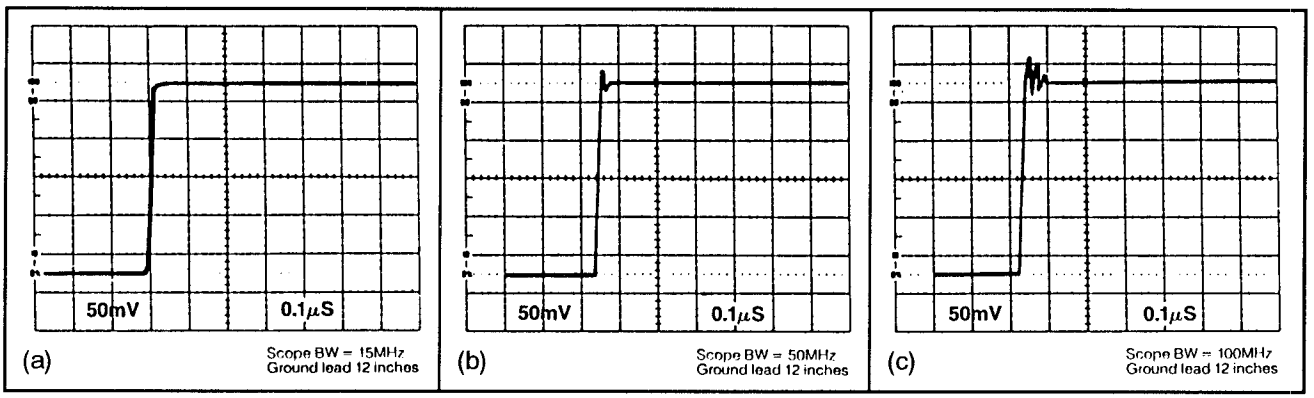

Figure 25: The effects of ground lead inductance on various bandwidth scopes: a) BW = 15 MHz and ground lead = 12"; b) BW = 50 MHz and ground lead = 12"; and c) BW = 100 MHz and ground lead = 12".

ground lead lengths on the display of a very fast pulse. This is the most critical way of looking at ground lead effects: Use a fast pulse, with a rise time of about 70 ps and a fast (400 MHz) scope with a matching P6137 probe.

Let's take a closer look at the two best scenarios. Figure 26A shows the input pulse under optimum conditions when using 50 Ω coaxial cable. The scope is the Tektronix 2465B with 50 Ω input and 50 Ω cable from a 50 Ω source. Displayed rise time is 1 ns.

Figure 29B shows the same signal when using the scope-probe combination under optimum conditions. A BNC-to-probe adapter or an in-circuit test jack provides a coaxial ground that surrounds the probe ground ring. This system provides the shortest probe ground connection available. Displayed rise time is 1 ns.

How Probe Design Affects Your Measurements

Probes are available in a large variety of sizes, shapes and functions, but they do share several main features: a probe head, coaxial cable, and either a compensation box or a termination.

The probe head contains the signal-sensing circuitry. This circuitry may be passive (such as a 9 MΩ resistor shunted by an 11 pF capacitor in a passive voltage probe or a 125-turn transformer secondary in a current probe) or active (such as a source follower or Hall generator) in a current or active voltage probe.

The coaxial cable couples the probe head output to the termination. Cable types vary with probe types. The termination has two functions:

1. To terminate the cable in its characteristic impedance.
2. To match the input impedance of the scope.

The termination may be passive or active circuitry. For easy connection to various test points, many probes feature interchangeable tips and ground leads.

A unique feature of most Tektronix probes is that the coaxial cable has a resistance-wire center conductor. This distributed resistance suppresses ringing caused by impedance mismatches between the cable and its terminations when you're viewing fast pulses on wideband scopes.

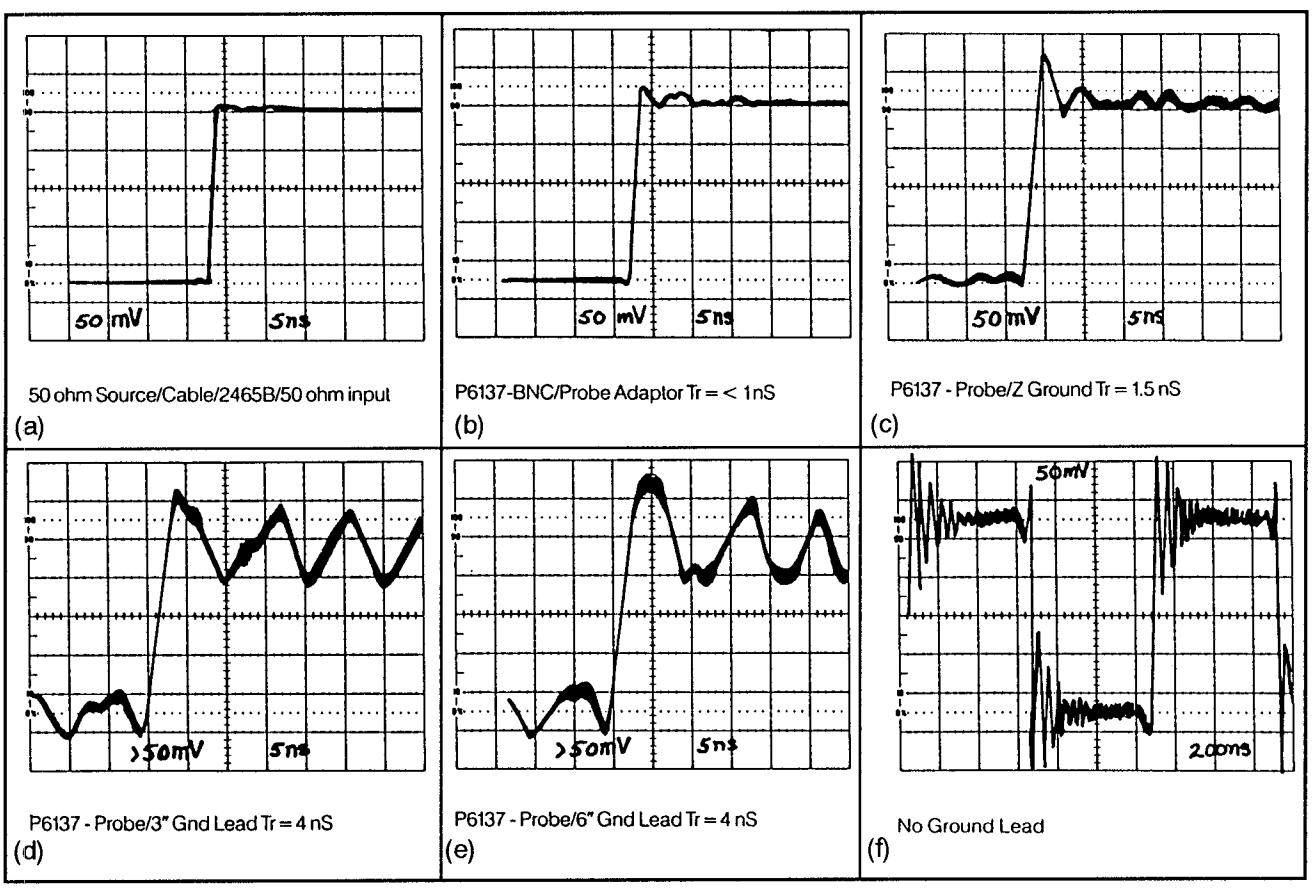

Figure 26: The effects of various grounding methods and ground lead lengths on the display of a very fast pulse.

Types of Probes

Tektronix designs and manufactures over 150 different probes. What is the most meaningful way to classify the wide variety of probes? The first and simplest way is by purpose. For example, is a particular probe's purpose to sense voltage or current? Figure 27 is a listing of probe types, while Figure 28 gives a breakdown of a probe's integral parts.

Voltage-Sensing Probes

The two main types of voltage-sensing probes, active and passive, differ in their internal circuitry and mode of operation. Passive voltage-sensing probes are built with passive circuit components: resistors, capacitors and inductors. Their main advantages are:

- Ruggedness
- Relatively low cost
- Wide dynamic range (therefore, less liable to electrical damage)
- Simplicity (which makes them easy to use and calibrate)
- Fast rise time

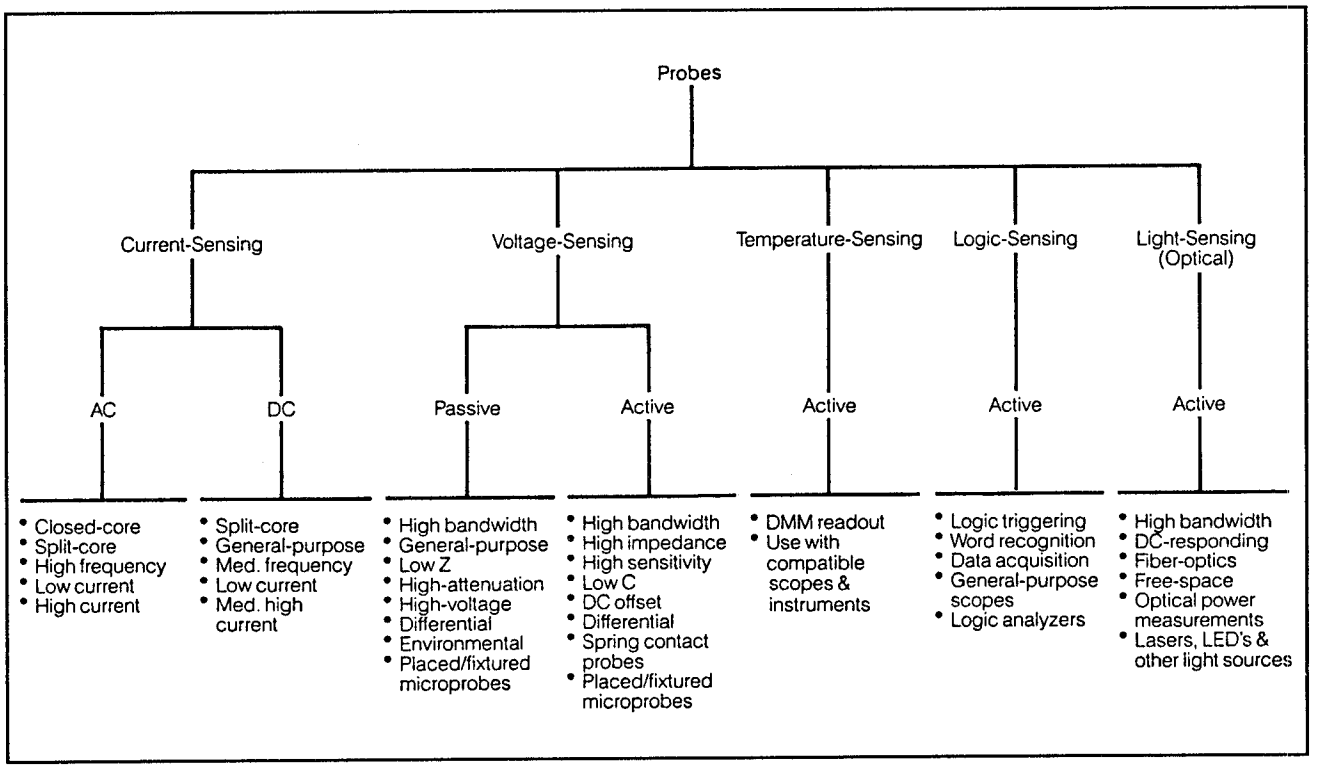

Figure 27: A comprehensive listing of probe types.

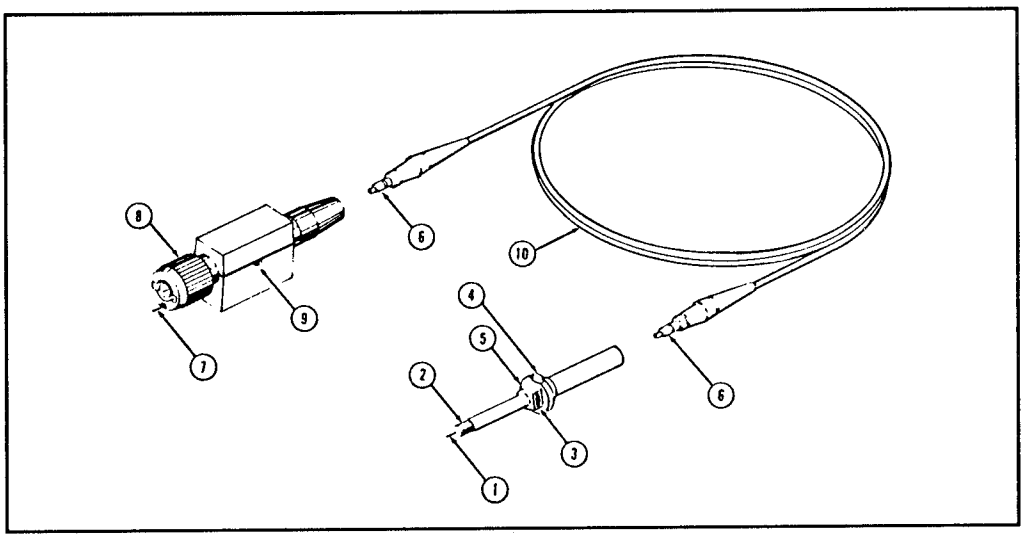

Figure 28: A typical probe's "anatomy": 1. a low inductance tip to reduce ringing, 2. the grounding ring, 3. a covered ground lead connection point, 4. a ground reference button found on some probes, 5. the finger guard to keep your fingers away from the DUT, 6. an interconnection system part, 7. the coding for either a 1X or 10X probe, used with scopes having either a vertical scale factor readout or knob-skirt readout, 8. the BNC housing, 9. the compensating box, and 10. the cable itself, designed for low capacitance.

Their main limitation is that they present lower input impedance as the input signal frequency increases. Adding attenuation to the probe increases the impedance, but it reduces the displayed signal level. Passive voltage-sensing probes may be further classified by their attentuation of signals:

- 1X (no attentuation)
- 10X (10 to 1) probe input-to-probe output attentuation working with the resistance of the scope.
- 100X (100 to 1 attenuation)
- 1000X (1000 to 1 attenuation)

Attenuation is neither good nor bad in itself. For example, high attenuation probes are very useful for measuring high-voltage signals while protecting a scope's input circuits. However, a high attenuation probe may attenuate a low-voltage signal so much that you can't measure it.

Low Z passive probes are specially designed for measuring very high frequency

signals. The benefits of Low Z probes (also called "low capacitance" probes) include consistent and predictable loading through a wide range of frequencies.

Probe impedance matched to the 50 Ω input of high-bandwidth scopes enables probe designers to use a transmission-line approach in the design of the probe termination and cable. This design cancels the effects of cable capacitance and allows you to use longer cables at bandwidths up to 3.5 GHz.

Probes For Making Differential Measurements

Signals that are not referenced to ground, such as the voltage drop across a collector load resistor or the gate drive signal in a 3-phase switching power supply, require differential measurement techniques to extract the signal in the presence of unwanted information.

This unwanted information may be the power supply voltage (elevated signal) or line frequency signals associated with switching power supplies. Differential amplifiers measure only the difference signals between two points and reject the unwanted common mode signal (a signal or DC voltage common to both test points).

In order to preserve the high common mode rejection ratio (CMRR) of scope differential amplifiers, it is necessary to use one of the following methods: direct connections, specially designed differential probe pairs or differential probes (probes that provide differential processing in the probe itself).

Direct connections load the DUT, so probes such as the Tektronix P6055, which are used in pairs, are matched in length (for equal transit-time), loading, and attenuation. (Attenuation is adjustable over about a ±1% range to ensure maximum CMRR performance). A differential probe (one probe with two inputs, such as the Tektronix P6046) provides maximum CMRR at high frequencies.

In general, differential measurements should be made *without* using the probe ground leads on signal connections (probe pairs). The ground leads should be clipped to each other or removed altogether to avoid accidental contact with elevated circuitry.

Specialty Probes

A special category of passive voltage-sensing probes are high-voltage probes, which handle signals up to 40 kV. Another type of passive voltage-sensing probe is the environmental probe, which operates over a very wide temperature range. Logic probes sense logic states. Temperature probes measure the temperature of components such as solid-state devices and other heat-generating items.

Surface Mount Device Interconnects

Many electronic circuit boards incorporate surface mount technology (SMT). Increased circuit density, increased product reliability, and lower assembly costs are among the many benefits of this technology. Troubleshooting and device interconnection, however, have become more difficult due to decreased device size, tighter lead spacing, and increased board densities.

The following interconnects complement and enhance the usefulness of a probe and enable you to access signals in high-density areas.

SMT Grabber Clips

The SMT grabber clip is an interface device for attaching logic and analog probes to today's SMDs, DIPs, and discrete components with maximum lead diameters of 0.095". Dual sided 0.025" lead contacts allow this grabber to be used in multiple signal insertion and acquisition.

Spring contact probes

Spring contact probes are designed for bed-of-nails mounting and high speed testing of circuit boards at the component level. These are true active probes, and represent state-of-the-art in miniaturization and performance. The smaller versions of the P651X family allow mounting on 50 mil (1.27mm) centers.

Microprobes

Microprobes can be used for probing micro-electronic devices, hybrid circuits, surface mounted packages, and integrated circuits.

How to Interpret Probe Specifications

This list of key parameters, and comments about them, will help you evaluate specs published by a probe manufacturer. Some of the parameters presented here may not show up on manufacturers' probe charts due to lack of space, but the information should be available and be part of the overall probe specifications.

Aberrations

An aberration is a deviation from a theoretically correct response to an input signal. In practice, aberrations usually occur on the leading edge of a step function. Aberrations are measured as a ± percentage deviation from the final level (flat top).

Aberration specs sometimes specify time as well. Example "aberration specifications are +3% and 5% p-p within the first 30 nanoseconds." Before assuming that aberrations are caused by a probe, consider scope aberrations, the probe grounding techniques used, and the signal source. Figure 29 shows what an

aberration specification of +4%, -6%, 8% p-p means.

Amp-Second Product

For current probes, this spec is a measure of the current transformer core's energy-handling capability. If the peak current times the pulse width exceeds the amp-second product rating, the core saturates and clips portions of the displayed signal.

Attenuation

A high-attenuation probe allows you to safely view large signals and minimize probe tip capacitance. However, a disadvantage of high attenuation probes is that it may prevent you from measuring small signals.

Bandwidth

Most Tektronix passive voltage probes are designed to provide a specified scope bandwidth at the probe tip. These probes will not degrade the upper 3 dB bandwidth spec of the scope with which they are compatible. The rise time formula (square root of the sum of the squares) that usually applies to active probes does not apply to these passive voltage probes.

Accuracy

For voltage-sensing probes, accuracy generally refers to the scope's attenuation of a DC signal. The calculations and measurements of probe accuracy generally include the scope input resistance. An example specification is: 10X within 3% (scope input 1 MΩ within 2%).

For current-sensing probes, this spec is actually the accuracy of the current-to-voltage conversion. The accuracy of the conversion depends on the current transformer turns-ratio and the value and accuracy of the terminating resistance.

Current probes that work with dedicated amplifiers (such as the Tektronix

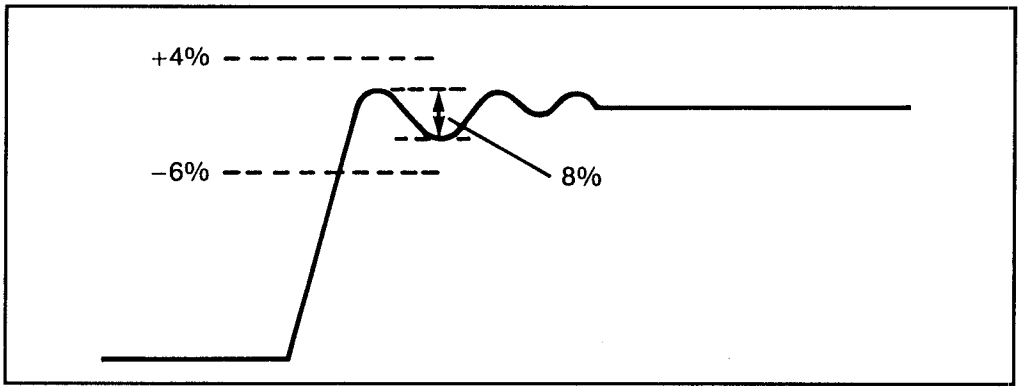

Figure 29: The meaning of an aberration specification of +4%, -6%, 8%p-p.

A6302/AM503) read directly in amps/div, and specify attenuator accuracy as a percentage of the current/division setting. This specification is similar to scope attenuator specs.

Capacitive Loading

For voltage probes, probe capacitance is important because lower capacitance minimizes rise time errors. Probe capacitance affects pulse amplitude measurements if pulse duration is less than five times longer that the probe RC time constant.

CW Frequency Current Derating

Current probe specs include amplitude versus frequency derating curves that relate core saturation to increasing frequency. If the average direct current is zero amps, the waveform peaks progressively clip as the frequency rises or the amplitude increases.

Decay Time Constant

For current probes, the decay time constant indicates a probe's pulse-supporting capability. This time constant is the secondary inductance divided by the terminating resistance. The decay time constant is sometimes called the probe L/R ratio.

Direct Current

For current probes, DC decreases permeability which in turn decreases the effective secondary inductance and L/R time constant. The high frequency response usually doesn't change. As DC current flows through the probe, the operating point frequency rises and low frequencies are lost. Some current probes have current-bucking options that null the effects of DC.

Insertion Impedance

For current probes, insertion impedance is the impedance reflected from the current transformer's secondary circuit. Typically, a current probe's reflected impedance has an insignificant effect on circuits that have more than 25 Ω impedance. Typical insertion loss values are 0.03 Ω and 0 to 5 μH (micro Henries).

Input Resistance

A probe's input resistance is the resistance that the probe offers to signals from the DUT at DC.

Input Capacitance

The probe's input capacitance is the probe capacitance measured at the tip.

Maximum Input I

Maximum input current is the total current (DC plus peak AC) that the probe will accept and still perform as specified. For AC current, peak-to-peak values must be derated versus frequency to calculate the maximum total input current.

Maximum Input V

Maximum continuous input voltage at DC.

Maximum Peak Pulse Current Rating

This rating takes into account core saturation and development of potentially damaging secondary voltages and must not be exceeded. The maximum peak pulse current is usually specified with an amp-second product. Exceeding the amp-second product saturates the transformer core and distorts the output.

Maximum Voltage Rating

A voltage probe's maximum voltage rating is determined by the breakdown voltage rating of the probe body or the probe components at the measuring point.

Propagation Delay

Every probe introduces some time delay or phase shift with frequency. A 42-inch probe has a 5 ns signal delay. At 1 MHz, a 5 ns delay should only be of concern when measuring time differences of two or more waveforms, or when making power measurements with a combination of current and voltage probes.

Rise Time

Rise time is a probe's 10% to 90% response to a step function. Rise time is approximately related to bandwidth by the factor 0.35.

Ringing

Ringing is a damped oscillation response usually caused by inductive effects of poor probe grounding techniques (long leads, no ground leads, non-use of probe tip adapters).

RMS Current

Root mean square current is a parameter describing the equivalent heating effect (power) of CW waveforms in relation to steady-state DC. Both will be equal. For sine waves, the conversion is: PEAK x 0.707 = RMS.

Temperature Range

For current probes the temperature is the probe operating temperature. Like voltage probes, current probes have a maximum amplitude versus frequency derating. The heating effects of energy induced into the current transformer magnetic shielding require the derating. Increasing temperature causes increasing losses.

Tangential Noise

A practical method of specifying probe generated noise (active probes). Tangential noise figures are approximately two times RMS noise.

Scope Capability Affects Choice of Probes

What is a scope's bandwidth? A probe should have equal or greater bandwidth specs. What is a scope's input capacitance? A probe should have a compensation range covering the scope's nominal input capacitance.

A probe should provide automatic coding for scale-factor equipped scopes. If a scope has a 50 Ω, 1 MΩ input provision (switchable), then appropriate probes

are a 50 Ω passive probe or an active (FET) probe for the 50 Ω inputs, in addition to standard passive probes for the 1 MΩ input.

If a scope has side mounted input connectors, then probes should have right-angle connectors for compact routing of probe cables. If a scope has full differential input capability, then a differential probe or matched differential probe pair is best for maximum CMRR.

Generally, high frequency (specialty) probes also perform satisfactorily in low frequency applications if they are compatible with the scope's input capacitance. A drawback to using a high-frequency probe for low-frequency applications is its higher price compared to low-frequency probes offering the same performance at lower frequencies. Low-frequency (general purpose) probes may be perfect for many applications, even on high-frequency scopes, but they do put a ceiling on scope performance.

Probe Electrical Parameters

How does probe loading affect measurements? A high impedance probe is important for both pulse rise time and amplitude measurements. But, the capacitive and resistive elements of the impedance are not equally important in both measurements.

Probe Capacitance

In pulse rise time measurements, capacitance is more important than resistance because minimizing probe capacitance reduces rise time error. For flat top (amplitude) measurements, probe capacitance is less important if the pulse duration is at least five times longer than the RC time constant. However, the probe capacitance still degrades the rise time.

When measuring pulse amplitude, a high resistance probe (10 MΩ) gives minimum amplitude error; however, any significant tip capacitance still degrades the leading edge.

For sinewave amplitude measurements, a probe should have the highest possible impedance at the frequency of interest. Loading varies directly with frequency.

What is the waveform rise time? Observed rise time is the speed with which a scope responds to a changing signal level. For active (FET) probes, observed rise time is approximately equal to the square root of the sum of the squares of all the rise times in the system (scope, probe and DUT). However, passive probes don't follow this rule. In fact, some actually enhance the performance of specific

scopes by working in conjunction with a scope's input circuitry to provide a system bandwidth greater than that obtained by injecting the signal directly into that input.

As a general rule, however, take the lower of the two bandwidth figures as the limit. For example, for a 150 MHz scope and a 250 MHz probe, assume the system bandwidth is 150 MHz. For a 300 MHz scope and a 350 MHz probe, assume the system bandwidth is 300 MHz. Accurately measuring very fast DUT rise times requires minimal probe and scope rise times.

Peak Voltage

If you are measuring signals in circuits that have large voltage peaks, then you need a probe that can safely handle the signals. For passive probes, the maximum input voltage is typically 500 V peak. Active probes usually have a small dynamic range, typically ±0.6 V to ±60 V. High voltage probes can handle peak voltage from 2 kV to 40 kV, depending on type. All probes follow a voltage derating with frequency and/or pulse width specification as shown in Figure 30.

Waveform Amplitude

Manufacturers state probe maximum input voltage for passive probes (or dynamic range for active probes) as DC plus peak AC. To cover all situations, DC max (DC plus peak AC) is also the maximum safe input before electrical damage occurs. For example, ignoring frequency derating, we can say that a passive probe is linear from 0 V to 500 V. Dynamic range specifications imply a linear operating range. Outside the range we have the maximum safe input specification (before damage). For example, for the Tektronix P6201 FET Probe, the dynamic range is ±0.6 V (or ±200 V with attenuators).

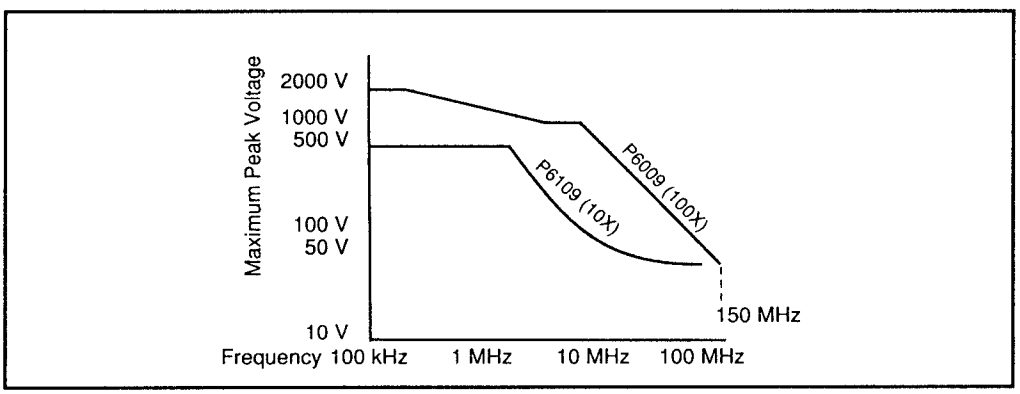

Figure 30: A voltage derating vs. frequency graph for two commercially available probes.

Duty Cycle

A waveform's duty cycle is is the ratio of the pulse train's "on" time to its period. A symmetrical square wave has a 50% duty cycle (also called "duty factor"). This is important only when you are using the probe near its maximum peak pulse limits — with high voltage probes, in particular. For example, Tektronix specifies its P6015 high-voltage probe at 40 kV peak with a 10% maximum duty cycle.

Bandwidth

For amplitude accuracy, the bandwidth of a scope/probe combination must be wider than the DUT bandwidth. As a rule-of-thumb, use a scope/probe combination that has a rise time at least four times faster than the measurement you expect to make. A 4:1 ratio gives you a rise time measurement within 3%.

A narrow probe bandwidth (relative to the DUT's maximum frequency content) attenuates high frequency sine waves and rounds the edges of pulses. Probe bandwidth is affected by the probe resistance and capacitance, as well as by the cable and connector transmission characteristics.

Aberrations

You may recall that aberrations are variations in the signal caused by the probe or scope, or both. Typically, ±4% peak-to-peak aberrations are tolerable. This percentage is a measure of the deviation from the flat section following the leading edge, assuming an ideal step function at the input.

Timing

When two or more signals are being compared, it may be important to consider the effects, if any, of any differences in transit time through the probe cables. Applications where transit time is important are time coincidence measurements, propagation delay measurements, and power measurements (when a combination of voltage and current probes are used).

Transit time is a fixed quantity and is a function of the length and propagation velocity of a specific probe cable. A typical probe cable has a propagation velocity of about 4.2 ns/m. Phase shift implies a frequency component and is stated in degrees. It is related to transit time (propagation delay) by the following formula:

Transit time (seconds)/period x 360° = phase shift (degrees)

Factors contributing to phase error are:

- The cable length (because it affects transit time).
- The difference between the two transit times.
- Capacitive loading, which causes slew (degraded rise time) at the

source, which in turn causes timing errors.
- Digital miscounting caused by capacitive loading induced slew.

Probes with wide compensation ranges (15 to 60 pF) and high tip capacitance can introduce high error problems. It can be shown that probes with an excessive compensation range have a necessarily high tip capacitance, all other factors being equal. That's why probes generally limit the upper compensation range to cover only the scope input capacitance they are designed to work with.

Selecting the Best Probe for the Job

This process may be as simple as selecting the probe supplied or recommended by the manufacturer of the scope, or as complex as selecting a probe to make high current measurements on new power supply designs.

The correct attenuator (10X) or active probe should provide specified bandwidth *at the probe tip*. With few exceptions, probes are not designed to increase the bandwidth of a scope. Bearing these facts in mind, check the following guidelines for the type of application area you are interested in and then refer to manufacturer's spec sheets for a particular scope model, or if not listed, select a probe to match a scope's bandwidth and input capacitance. Remember, probes are compatible with other manufacturer's scopes, provided that the basic requirements of BW and input C are met. Tektronix probe features, such as CRT or knob-skirt read-out and identify functions, are also compatible with scopes not incorporating these features; however, they will be non-functional.

Selection Guidelines

For general purpose, maximum bandwidth applications:

1. Select or use the probe specified by the scope manufacturer as the standard accessory or recommended accessory probe for that scope. In the case of Tektronix probes and scopes, this ensures scope bandwidth *at the probe tip* unless otherwise specified.
2. Select an active 10X probe providing about 2 pF capacitive loading and 10 MΩ input resistive loading if circuit output level is no greater than 12 Vp-p, or 120 Vp-p with a 100X attenuation probe (for 1 MΩ or 50 Ω inputs).

For general purpose, maximum sensitivity applications:

1. Select a 1X / 10X switchable probe that gives you high sensitivity at 1X at reduced bandwidth (about 12 MHz) and low capacitive and

resistive loading at 10X, up to 200 MHz.

For maximum sensitivity applications:

1. For low frequency use, choose a 1X probe for low-cost wide dynamic range, and low bandwidth applications (up to 30 MHz). Use 10X probes for general purpose work.
2. For high frequency use, choose an active probe (FET) with a 1X sensitivity. These will provide high sensitivity, low capacitive loading and wide bandwidth (up to 900 MHz). Trade-offs are their price and narrow dynamic range.

For minimum circuit loading at high frequencies:

1. Select a passive 50 Ω type probe providing about 1 pF capacitive loading if the circuit can accept a resistive loading of 500 Ω (10X) or 5 KΩ (100X). This requires the scope to have a 50 Ω input provision.
2. Select an active 10X probe providing about 2 pF capacitive loading and 10 MΩ input resistive loading if circuit output level is no greater than 12 Vp-p, or 120 V with a 100X attenuation probe (for 1 MΩ or 50 Ω inputs).
3. Select a bias/offset probe for high-speed ECL probing. This provides about 1.3 pF loading and 450 Ω resistive loading. The DC offset feature helps cancel the effects of probe resistive loading under user-selectable conditions.

For high voltages:

1. High voltage probes are derated with frequency, so it is important to know signal characteristics before choosing a specific probe. If signals are from DC to about 100 kHz, you can select a high voltage probe from its *maximum DC voltage* specs.
2. If signals are beyond about 100 kHz, or are pulses, single-shot or repetitive, you will need to consult the manufacturer's detail specs to determine if a first-look probe will do the job.

Here is an example:

Signal:	800 V_{RMS}, 5 MHz sine.
First-look probe:	Tektronix P6009 1.5 kV probe.
Frequency Derating:	The 6009 is derated to 700 V_{RMS} at 5 MHz; the

	probe would be overstressed.
Final Choice:	Tektronix P6015 20 kV probe.
Frequency Derating:	The P6015 is derated to about 6 kV at 5 MHz; this probe will easily make the measurement.

Current Probes

Current can be derived from voltage measurements made across an added or existing resistor and simply applying Ohm's Law, I = E/R. This may be a valid method for some applications, but in the majority of cases, the added resistance and/or probe capacitive loading can change the circuit operation and, therefore, produce inaccurate test results.

A current probe offers the minimum circuit loading possible and, therefore, gives the most accurate test results. Current probes are classified as AC responding (AC) or AC and DC responding (DC), and are either a fixed core or split-core configuration. A lot more needs to be known about the total signal being measured when selecting a current probe.

Tips On Using Probes

Compensating A Probe

The most common mistake in making scope measurements is forgetting to compensate the probe. Improperly compensated probes can distort the waveforms displayed on the scope. The probe should be compensated as it will be used when you make the measurement (see Figure 31).

The basic low frequency (LF) compensation procedure is simple:

1. Connect the probe tip to the scope calibrator outputs.

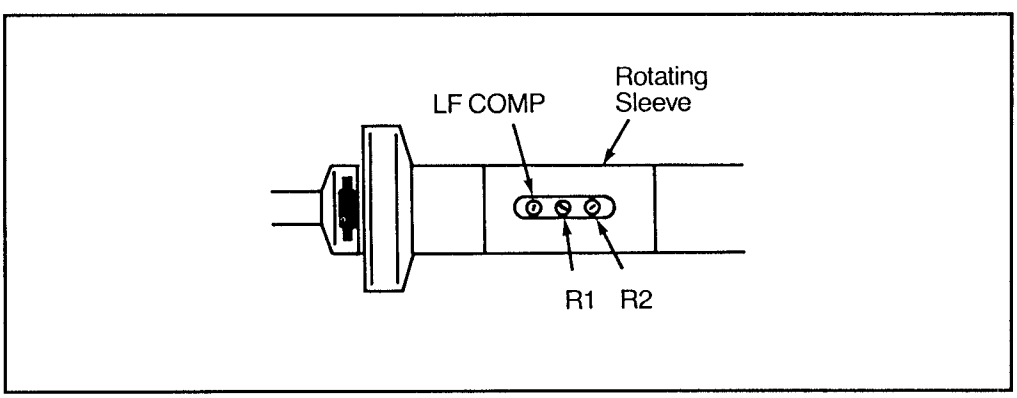

Figure 31: Location of compensation adjustments on a Tektronix P6103 probe.

2. Switch the channel 1 input coupling to DC.
3. Turn on the scope and move the CH1 VOLTS / DIV switch to produce about four divisions of vertical display.
4. Set the sweep rate to 1 ms/div
5. Use a non-metallic alignment tool to turn the compensation adjust until the tops and bottoms of the square-wave are flat.

Choosing the Right Ground Option

To choose the right ground option, make sure the ground in the DUT is the same as the scope ground (don't assume it is). The scope ground is always common to the DUT ground if you are using the scope's power cord and plug and it's plugged into the same 3-wire outlet system as used by the DUT. Check the circuit ground by touching the probe tip to the point you think is ground — before making a hard ground by attaching the ground strap of your probe.

If you intend to probe many points in the same circuit and measure low frequencies, you can ground the circuit to your scope once, instead of every time you move the probe. Connect the circuit ground to the GND jack on the scope front panel. A special problem that occurs when measuring very high speed signals is ringing due to inductance in the ground-return path. Probes come with a wide range of grounding accessories, allowing you to pick the right ground leads for the DUT's signal frequency range. Optional accessories include BNC-to-probe tip adapters and etched circuit board (ECB) probe test jacks. Choosing the right tip for the frequencies measured can minimize ground-path ringing.

Caring for the Probe Tip

The following few guidelines will prolong the lifetime of a probe tip:

1. When you are not using the probe, cover the tip with the tip protector that is supplied with most probes.
2. Use the correct adapter, such as an IC grabber or a retractor tip. Don't use the probe to scrape through insulation, pry components from their sockets, or to move components.
3. Don't use the probe to hold down components while soldering in place.

Remember, no matter how well it is made, every probe has its breaking point. All probes should be used with care, as you would any other precision tool.

Pitfalls in Using Probes

Watch out for these pitfalls in using probes:

1. Using probes without checking LF compensation.
2. Not using ground leads or using ground leads that are too long, which

causes ringing.

3. Connecting a probe ground lead to elevated ("hot") circuitry; the resulting damage is not covered by probe warranties.
4. All things being equal, the shortest ground lead produces the highest ring frequency.

If the ground lead is very short, the ring frequency might be high enough to be outside the passband of the scope, and/or the input frequency content may not be high enough to stimulate the ground lead's resonant circuit. In all cases, the shortest ground lead should be used, consistent with the need for probe mobility. If possible, use 3" or shorter ground leads, such as the low impedance contact (Z) lead. The correct probe grounding method depends on the signal's high frequency content, and the need for mobility between test points. A 12" ground lead may be perfect for many lower frequency applications. It will provide you with extra mobility, and nothing will be gained by using shorter leads.

Ground Loop Noise Injection

Another form of signal distortion can be caused by signal injection into the grounding system. This can be caused by unwanted current flow in the ground loop existing between the common scope and test circuit power line grounds, and the probe ground lead and cable. Normally, all these points are, or should be, at zero volts, and no ground current will flow. However, if the scope and test circuit are on different building system grounds, there could be small voltage differences, or noise on one of the building ground systems. The resulting current flow (at line frequency or noise frequency) will develop a voltage drop across the probe cable's outer shield, and be injected into the scope in series with the desired signal.

Inductive Pick-Up In Ground Loops

Noise can enter a common ground system by induction into 50 Ω signal acquisition cables, or into standard probe cables. Proximity to power cables or other current-carrying conductors can induce current flow in the probe's outer cable, or in standard 50 Ω coax. The circuit is completed through the building system common ground.

Prevention of Ground Loop Noise Problems

To prevent ground loop noise problems, keep all signal acquisition probes and/or cables away from sources of potential interference. Also, verify the integrity of the building system ground. If the problem persists, open the ground loop by:

1. Using a ground isolation monitor.
2. Using a power line isolation transformer on either the test circuit or the scope.
3. Using an isolation amplifier.

4. Using differential probes.

Never defeat the safety 3-wire ground system on either the scope or the test circuit. Do not "float" the scope, except by using an approved isolation transformer, or preferably, by using a ground isolation monitor.

Induced Noise in Probe Ground Leads

The typical probe ground lead resembles a single-turn loop antenna when it is connected to the test circuit. The relatively low impedance of the test circuit can couple any induced voltages in the probe (see Figure 32).

High speed logic circuits can produce significant electro-magnetic (radiated) noise at close quarters. If the probe ground lead is positioned too close to certain areas on the board, interference signals could be picked up by the loop antenna formed by the probe ground lead, and mixed with the probe tip signal.

Moving the probe ground lead around will help identify the problem. If the noise level changes, you have a ground lead induced noise problem. A more positive way of identification is to disconnect the probe from the signal source and clip the ground lead to the probe tip. Now use the probe/ground lead as a loop antenna and search the board for radiated noise.

Figure 33 shows what can be found on a logic board, *with the probe tip shorted to the ground lead.* This is radiated noise, induced in the single-turn loop and fed to the probe tip. The significance of any induced or injected noise increases with reduced working signal levels, because the signal-to-noise ratio will be degraded. This is especially true with ECL, where signal levels are 1 V or less. If possible, use an ECB-to-probe tip adapter (test point). If not, use a Z-lead or short

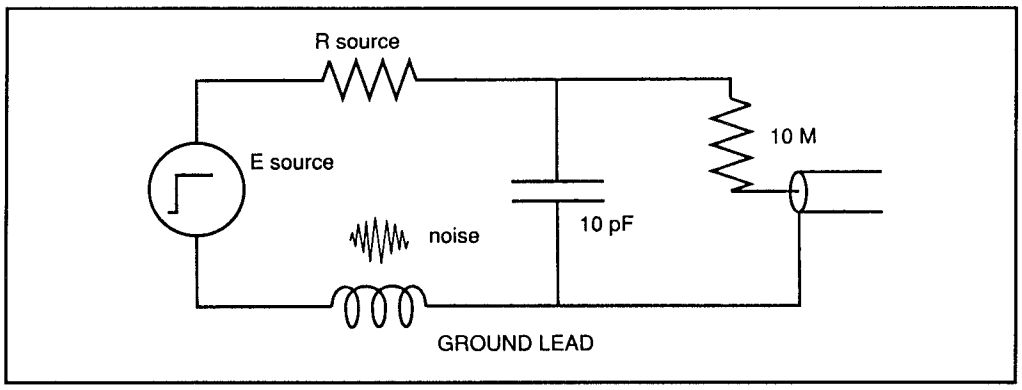

Figure 32: An equivalent circuit of induced ground lead noise.

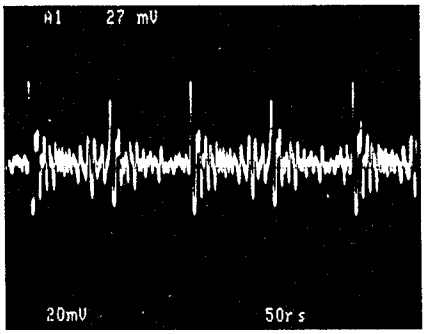

Figure 33: Induced noise in the ground loop with the probe tip shorted to the ground clip.

flexible ground lead. Also, bunch the ground lead together to make the loop area as small as possible.

Bias/Offset Probes

A bias/offset probe is a special kind of low-Z design that provides a variable bias or offset voltage at the probe tip. Bias/offset probes like the Tektronix P6230 and P6231 are useful for probing high speed ECL circuitry, where resistive loading could upset the operating point. They are also useful for probing higher amplitude signals (up to 5 V), where resistive loading could affect the DC level at some point on the waveform.

Bias/offset probes are designed with a tip resistance of 450 Ω (10X). When these probes are connected into a 50 Ω environment, this loading results in a 10% reduction in peak-to-peak source amplitude. This round-figure loading is more

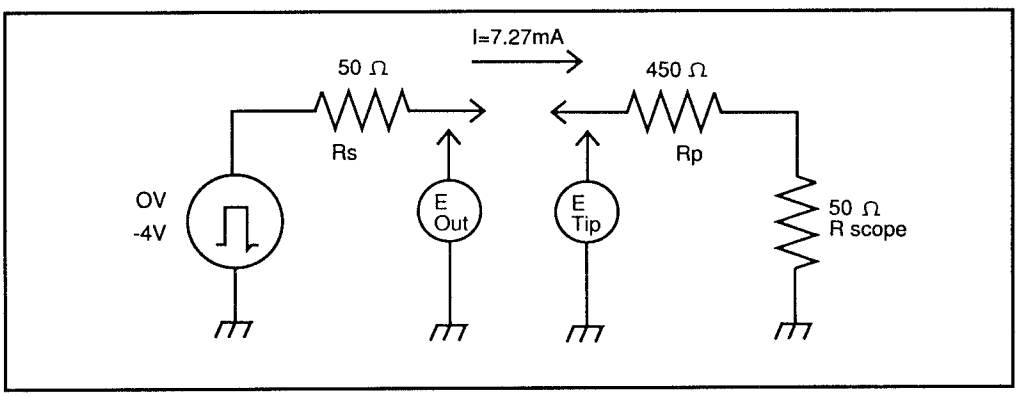

Figure 34: The principle of operation of a bias offset probe.

convenient to handle than that produced by a standard 500 Ω (10X) low-Z probe, which would work out at 9.09% under the same conditions. Bias/offset probes always present a 450 Ω resistive load to the source, regardless of the bias/offset voltage selected. The difference between bias/offset and standard low-Z probes lies in their ability to null current flow *at some specific and selectable point* on the input waveform (within 5 V). To see how bias/offset probes work, let's take a typical 10X, 500 Ω, low-Z probe and connect it in the circuit (see Figure 34). By taking a current flow approach we find that at one point on the waveform the source voltage is -4 V; therefore, the load current (using absolute values) is:

$$I = E / R = 4 / (R_S + R_P + R_{SCOPE}) = 4 / 550 = 7.27 \text{ mA}$$

Therefore, the voltage drop across the 50 Ω source resistance (R_S) is:

$$E = I \times R = 7.27 \times 10^{-3} \times 50 = 0.363 \text{ V}$$

And the measured pulse amplitude (actual value) is:

-4 + 0.363 V = -3.637 V, or about 9% down from its unloaded state.

If we substitute the 500 Ω, low-Z probe with a 450 Ω bias/offset probe, the circuit will look like that of Figure 35. With the bias/offset adjusted for 0 V, the effect on the circuit will be similar to a 500 Ω low-Z probe, except for a small resistive change.

Figure 36 shows the source waveform acquired by a 10 MΩ probe. Figure 37 shows the effect on the waveform when the 450 Ω probe is added. As expected,

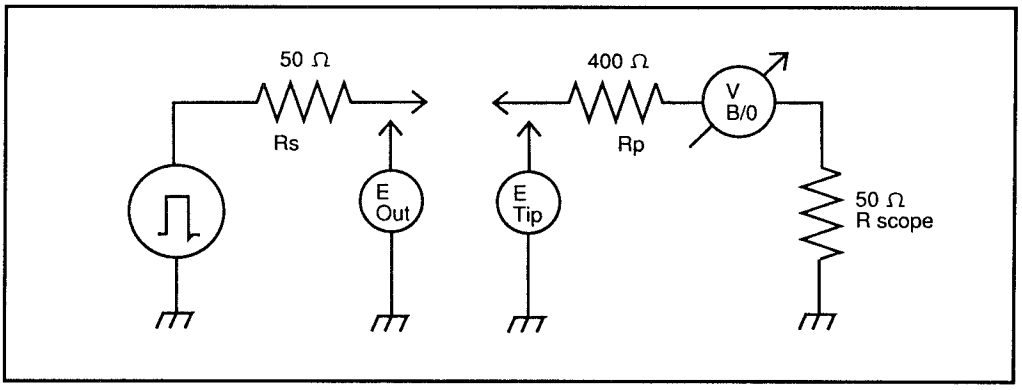

Figure 35: A bias/offset probe connected to a 50 Ω source.

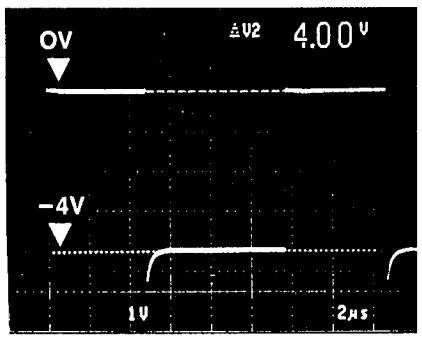

Figure 36: A negative going pulse acquired by a 10 MΩ probe.

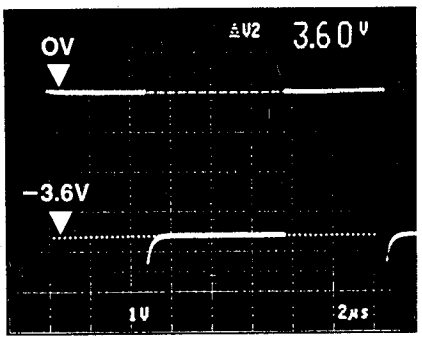

Figure 37: The same pulse acquired with a 450 MΩ probe added.

the pulse amplitude has reduced from -4 to -3.60 V or exactly 10% down.

Figure 38 shows the effect of adjusting the offset to -4 V. The -4 V bias opposes the signal at the -4 V level and results in zero current flow, and the source is effectively unloaded *at this point*. However, when the signal returns to ground level, there is a 4 V differential between the top of the pulse and the bias/offset source. Current will flow and Ohm's law will dictate that the top of the pulse will go negative by -40 mV (10%).

Sometimes it is desirable to adjust the offset midway between the peak-to-peak excursions. This distributes the effect of resistive loading between the two voltage swings. Figure 39 shows the effect of adjusting the bias/offset to -2 V. Current flow will be the same for both signal swings, and they will be equally down by 5%, for a total of 10%.

To summarize:

1. Bias/offset probes can be adjusted (within ± 5 V) to provide zero resistive (effective) loading at one selected point on the input waveform.
2. Bias/offset probes can be used to simulate the effect of pull-up or pull-down voltages (within ± 5V) on the circuit under test (voltage source impedance is 450 Ω).
3. Bias/offset probes always present a total resistive load of 450 Ω, and reduce the peak-to-peak amplitude of 50 Ω sources by 10%.
4. For simplicity, we have ignored the effects of capacitive loading;

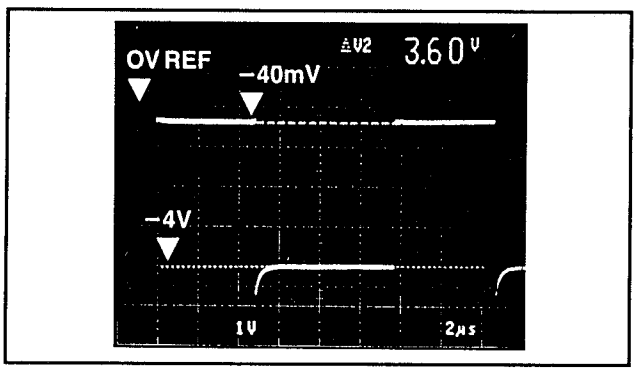

Figure 38: The effect of adjusting the offset to -4 V.

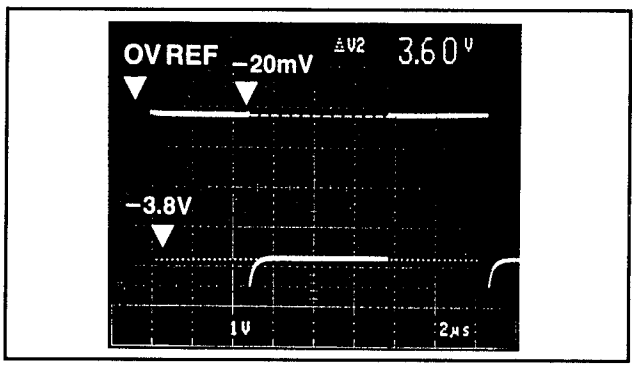

Figure 39: Adjusting bias to equally distribute current.

typically, bias/offset probes have less than 2 pF tip capacitance.

Bias/offset probes like the Tektronix P6230 or P6231 have bandwidths to 1.5 GHz, 450 Ω input resistance, and 1.3 pF (P6230), or 1.6 pF (P6231) input capacitance. They provide offset voltages of ±5 VDC, and function with 1 MΩ or 50 Ω input systems (P6231, 50 Ω only).

The P6231 is designed to operate with the Tektronix 11000 series scopes, and obtains operating power and bias/offset from the scope. Offset is selectable from the mainframe touch screen.

Differential Probing Techniques

Accessing small signals elevated from ground, either at an AC level or a combination of AC and DC, requires the use of differential probes and a differential amplifier system. One of the problems associated with differential measurements is the maintenance of high common mode rejection ratio (CMRR) at high common mode frequencies. Poor common mode performance allows a significant portion of the common (elevated) voltage to appear across the inputs of the differential probes. If the common mode voltage is pure DC, the result may be only a displayed baseline shift. However, if the common mode voltage is AC, or a combination of AC and DC, a significant portion may appear across the differential input and will mix with the desired signal. Figure 40 shows the basic items necessary to make a differential measurement.

In this example, two similar but unmatched passive probes are used. Usually, the

probe ground leads are either removed or clipped together. They are *never* connected to the elevated DUT.

CMRR depends upon accurate matching of the probe-pair's electrical characteristics, including cable length. System CMRR can be no more than the differential amplifier's specifications, and in all cases, CMRR degrades as a function of frequency. Figure 41 shows a simplified diagram of a DUT with a pulsed output of 1 Vp-p floating on a 5 Vp-p 20 MHz sine wave. CMRR at 20 MHz is a poor 10:1 because of the unmatched probes. The observed signal (referred to probe input) is a 1 Vp-p pulse plus 0.5 Vp-p sine.

Figure 42A shows what the displayed waveform might look like under the conditions shown in Figure 41. In comparison, Figures 42B and 42C show what the displayed signal might look like at CMRRs of 100:1 and 1000:1.

Differential Probe Types

There are two general types of differential probes: passive matched pairs and active one-piece differential probes. The Tektronix P6055 and P6135 passive matched probe-pairs provide a 100:1 CMRR at 20 MHz when used with appropriate differential amplifiers, and can provide CMRRs of up to 20,000:1 at low frequencies (P6135, 10,000:1, P6055, 20,000:1).

Passive probes impose a limit on CMRR at high frequencies because of the physical and electrical characteristics, and the separation from the differential amplifier. This barrier is overcome by moving the differential amplifier out to the probe tips on an active differential probe. Now lead lengths and electrical parameters can be accurately controlled to produce superior high frequency CMRR performance.

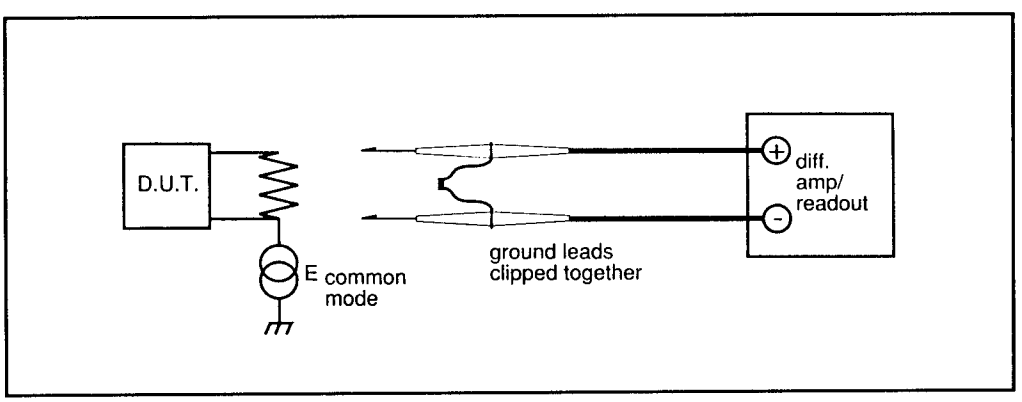

Figure 40: A basic setup for making a differential measurement.

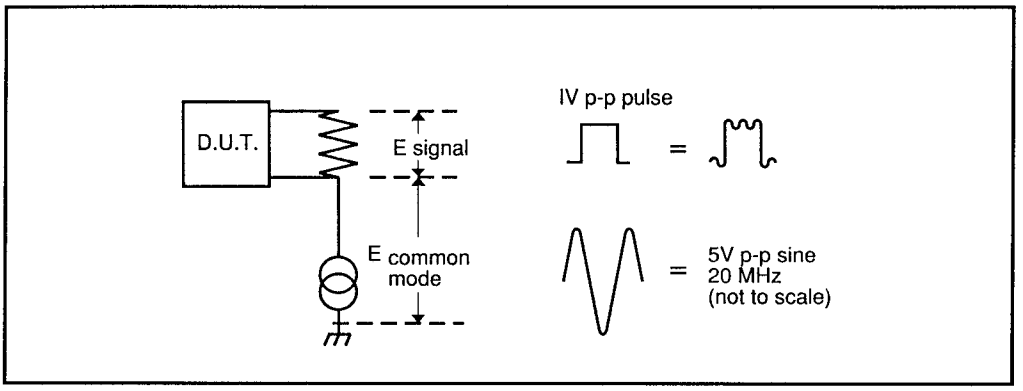

Figure 41: A DUT with a pulsed output of 1 Vp-p floating on a 5 Vp-p 20 MHz sine wave.

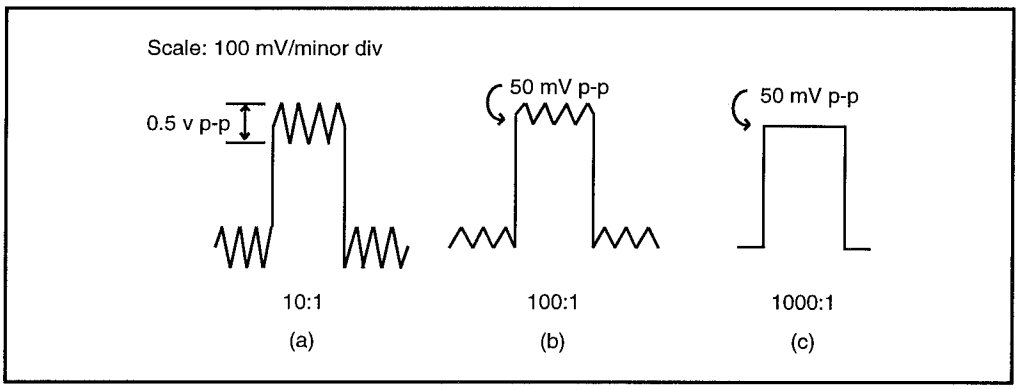

Figure 42: a) What the displayed waveform might look like under the conditions shown in Figure 41; b) at a CMMR of 100:1; c) at a CMMR of 1000:1.

The Tektronix P6046 Active Differential Probe houses dual input FETs, a differential amplifier, and a line driver in the probe body. A 10X dual attenuator can be used to extend the basic operating range of the system, and various probe tips can be used to access variously spaced test points. At the scope's end, a power supply and a calibrated V/div switch provides ranges of 1 to 200 mV/div when the scope sensitivity is set to 10 mV/div.

Because differential signal processing is performed at the probe tip, common mode rejection can be as high as 1,000:1 at 50 MHz. Contrast this with 100:1 at 20 MHz for the best passive probe-pair performance. The P6046 system is compatible with a wide range of scopes and measuring devices with single-ended

1 MΩ inputs. No external differential amplifiers are required.

Common Mode Linear Dynamic Range

Linear dynamic range figures are unique to active probes, and refer to the maximum voltage swing (DC + peak AC) between ground and the probe tip before some degree of non-linearity shows. In the case of differential active probes this parameter is called *common mode linear dynamic range*, and specifies the maximum voltage of the probe inputs from ground (DC + peak AC) before signal non-linearity manifests itself. The P6046 can access signals that are elevated up to ±5 V from ground (DC + peak AC) at 1X, and up to ±50 V with the 10X attenuator. — *Vaughn D. Martin*

The author wishes to thank Tektronix, Inc. for allowing use of selected copyrighted material.

Table of Contents

Section 5
Video

Table of Contents

5/Cam *Camcorder*

5/Cam - A *An Introduction*
5/Cam - F *Features*
5/Cam - TE *Test Equipment*
5/Cam - TR *Troubleshooting and Repair*
5/Cam - TR - EA *Electrical Adjustments*
5/Cam - TR - EA - BC *Brightness and Contrast*
5/Cam - TR - EA - C *Chroma Setup*
5/Cam - TR - EA - F *Focus*
5/Cam - TR - PS *Power Supplies*
5/Cam - TR - VM *Voltage Measurements*
5/Cam - TR - VP *Video Processing*
5/Cam - TR - VP - CC *Control Circuits*
5/Cam - TR - VP - R *Recording*
5/Cam - TR - VP - SC *Sensor Circuits*
5/Cam - TR - VP - SPC *Signal Processing Circuits*
5/Cam - TR - VP - TCC *Tape Counter Circuits*
5/Cam - VCS *Various Case Studies*
5/Cam - VCS - Sha-VL-L285U *Sharp VL-L285U*

5/VCR *Video Recorder*

5/VCR - A *An Introduction*
5/VCR - A - VHS *VHS Standard*
5/VCR - M *Maintenance*
5/VCR - TE *Test Equipment*
5/VCR - TR *Troubleshooting and Repair*
5/VCR - TR - AP *Audio Problems*
5/VCR - TR - AP - M *Monitoring*
5/VCR - TR - AP - R *Recording*

Table of Contents

5/VCR - TR - CSP *Control and Servo Problems*
5/VCR - TR - MA *Mechanical Adjustments*
5/VCR - TR - MA - HA *Height Adjustments*
5/VCR - TR - MA - TA *Tension Adjustments*
5/VCR - TR - MA - TT *Tape Transport*
5/VCR - TR - VP *Video Processing*
5/VCR - TR - VP - C *Color*
5/VCR - TR - VP - FPC *Frequency and Pulse Control (Automatic)*
5/VCR - TR - VP - LC *Luminance Circuit*
5/VCR - TR - VP - PI *Phase Inversion*
5/VCR - TR - VP - R *Recording*

5/VCR - VCS *Various Case Studies*
5/VCR - VCS - FiFVH722 *Fisher FVH-722*

5/Cam - A
An Introduction

VHS, SVHS, SVHS-C, VHS-C, 8mm, Hi-8 and Beta

A camcorder is a video recording device which consists of a video camera and a video recorder all in one package. As with home decks, camcorders are available in a variety of formats—SVHS, VHS, SVHS-C, VHS-C, 8 mm, Hi-8 and Beta. VHS has been dominant and is generally the standard by which others are compared.

Beta

As Beta's popularity began to fade, its manufacturers and fans claimed that the images were better. To drive this home, Beta's quality improved even more. VHS answered with Super-VHS (SVHS) which is now recognized as the best in resolution for consumer equipment.

SVHS

The SVHS camcorder is a unit capable of recording the separate luminance and chromanance video signals onto videotape. This allows for a better picture and higher resolution. An SVHS camcorder is capable of up to 420 lines of horizontal resolution. That is excellent resolution, especially when you consider that a regular television without SVHS capability will only produce about 330 lines of resolution. Standard VHS camcorders are only rated at about 250 lines of resolution.

SVHS systems will often be Hi-Fi capable, with flying erase heads for better joining of video recordings. Regular VHS tapes will not record in the Super VHS mode in an SVHS machine. Regular VHS tapes will work in an SVHS recorder, but will record as they would in a standard VHS machine.

Most camcorders will only record in the SP (standard play) mode, giving a maximum record time of about 2 hours and 40 minutes (when using a T-180 tape). On those machines with SLP (super long play) or EP (extra play) modes, a maximum of 8 hours can be recorded with the T-180 tape.

SVHS-C
VHS-C

SVHS-C and VHS-C camcorders are units with smaller version tapes of the SVHS and VHS machines, respectively. They were developed for the camcorder market in an effort to make the camcorders smaller and lighter. With a proper adaptor or video recorder, SVHS/VHS compact video cassettes can be played in standard SVHS/VHS machines.

Since these tapes are smaller, they cannot record as long as standard videotapes. They are limited to about 20 minutes in the SP mode or a maximum of 1 hour in SLP or EP mode.

8 Millimeter Hi-8

The other miniature camcorders, 8 millimeter and Hi-8, provide an even more compact, lighter unit. It can fit into the palm of a hand. The resolution of an 8mm camcorder is between 300 and 330 lines. Also, the 8mm units have flying erase heads. As a rule, the 8mm camcorder can record to a maximum of 4 hours. Hi-8 camcorders provide Hi-Fi sound recording and are otherwise similar to the 8mm camcorder.

Beta camcorders produce video images on Beta videotape. Beta camcorders are able to record, but not play. A Beta camcorder has about 280 lines of resolution, which is slightly better than a standard VHS machine. Average record time is five hours.

Tubes and Chips

Most camcorders available today will use a charge-coupled device (CCD) chip or a MOS chip to capture video images. These chips will typically have up to 360,000 pixels for picking up video images. An average resolution for a chip camera is about 330 lines. Most low-end camcorders will be rated at 270 lines.

CCD chips are lighter, better at viewing strong light or reflections without burning an image in, have much lower power consumption and extremely low light capabilities. Many camcorders on the market boast 3 lux capabilities. A low lux rating enables a camcorder to record better in lower light.

The older method of recording video images is with a tube. Tubes used in camcorders are newvicon, saticon and vidicon. Usually these are found in stand-alone cameras that hook to portable VCRs. Tube cameras tend to be bulky, heavy, with higher power consumption and a short life (typically about 5 years or less). Today, almost all camcorders use the CCD or MOS chip configuration.

CamcorderBlock Diagram

The basic block diagram of a VHS camcorder is shown in Figure 1. Within a VHS camcorder can be found a video drum assembly with 4 heads. The video tape wraps 270° around this 41.3 mm drum assembly. The head drum rotates at 2700 rpm. (A table top VCR will have a drum assembly that is 62 mm across with a 180° tape wrap. Rate of head rotation is 1800 rpm.) The use of a 4-head configuration and the 270° wrap creates a record pattern that is equivalent to that of a standard 2-head VHS pattern. During record or playback in a camcorder, the tape will be in contact with at least 3 video heads at any one time. Only one head needs be turned on during playback and record, and head selection is controlled by the head switching circuits.

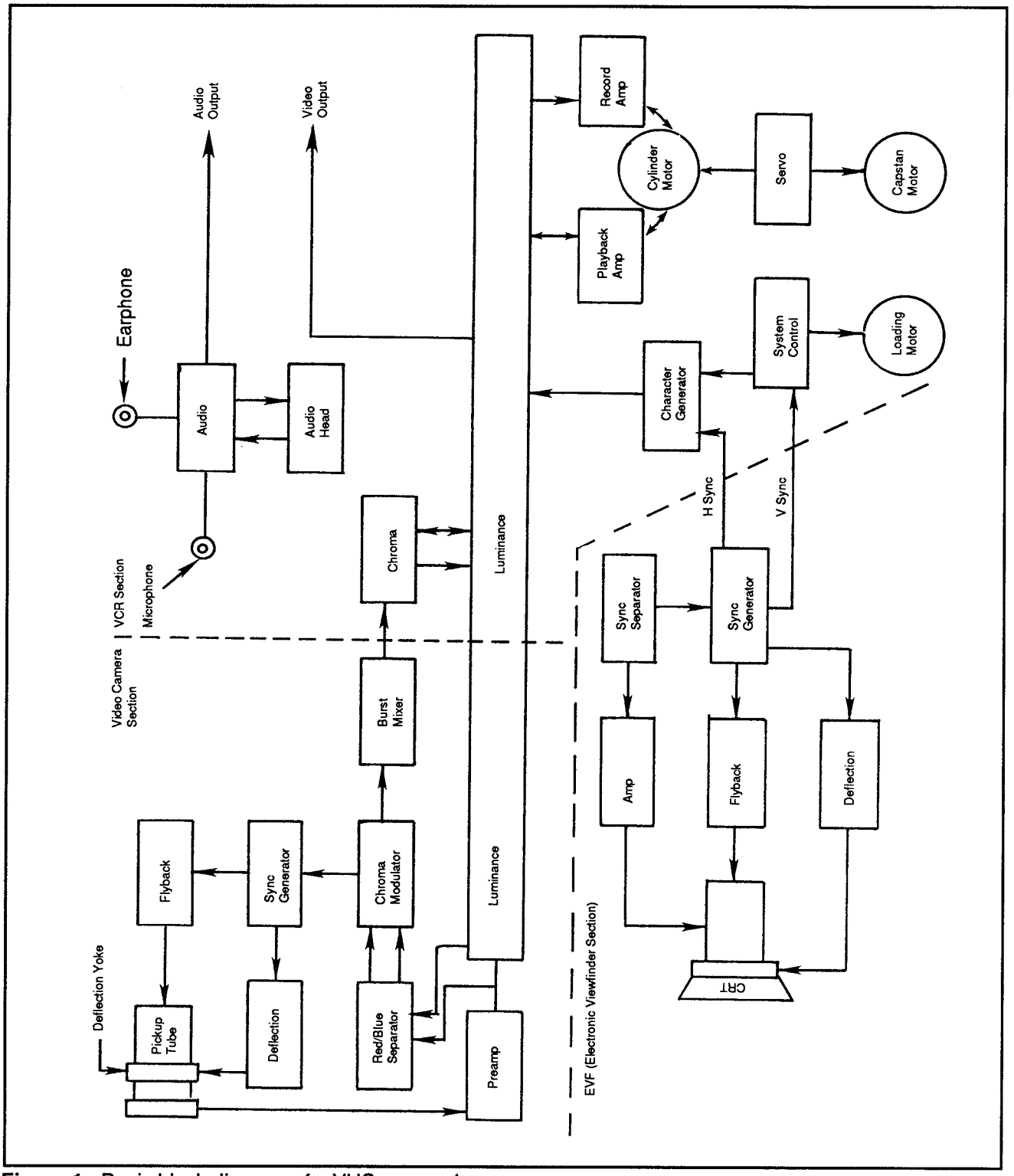

Figure 1: Basic block diagram of a VHS camcorder

Test Equipment and Tools

When servicing camcorders you will need a dual trace delayed sweep oscilloscope, a vectorscope, a good monitor, test charts and/or pattern generator, a DMM, and a light source of correct color and temperature.

The oscilloscope should not need to be above 30 MHz for checking the operations of a camcorder. Waveform patterns and peak-to-peak voltages for circuits are measured with the oscilloscope.

The vectorscope is used to display generated chroma phase signals and camera output signal amplitudes during adjustments.

A good quality monitor with overscan allows you to have the ability to see everything the camera pick-up sees.

Grayscale charts, white cards, and color-test patterns are needed to correctly adjust the color of a video camera. When using test charts, a light source between 3200 °K and 3400 °K is needed. These light sources must be evenly spread, or diffused across the test chart. In addition to the afore mentioned test charts, focus and back focus charts may be required.

Troubleshooting

In the troubleshooting section we discuss the areas related to the camera section. Section *"5/VCR - TR"* explains VCR repairs and alignments. Refer to Section *"5/VCR - M"* when doing camcorder VCR maintenance. The sections of the VCR portion that are related to the camera and viewfinder are also discussed in *"5/VCR - TR"*.

5/Cam - F
Features

Camcorders are equipped with many features. These features are worth noting as they could be potential areas for problems. (Refer to the camcorder consumer manual for a complete overview of available functions.)

All of the automatic functions sense the dominant subject or condition and make adjustments. Because of this, all of the automatic features can be easily fooled (see below), with the result being that the person using the camcorder might think that the unit is malfunctioning. Often, all you have to do is switch from automatic to manual. This falls into the troubleshooting categories of "look for the obvious" and "check for operator error."

Autofocus

Some camcorders use autofocus all the time, and have no manual override. When this is the case, a precisely adjusted focusing section is important for the unit to operate properly.

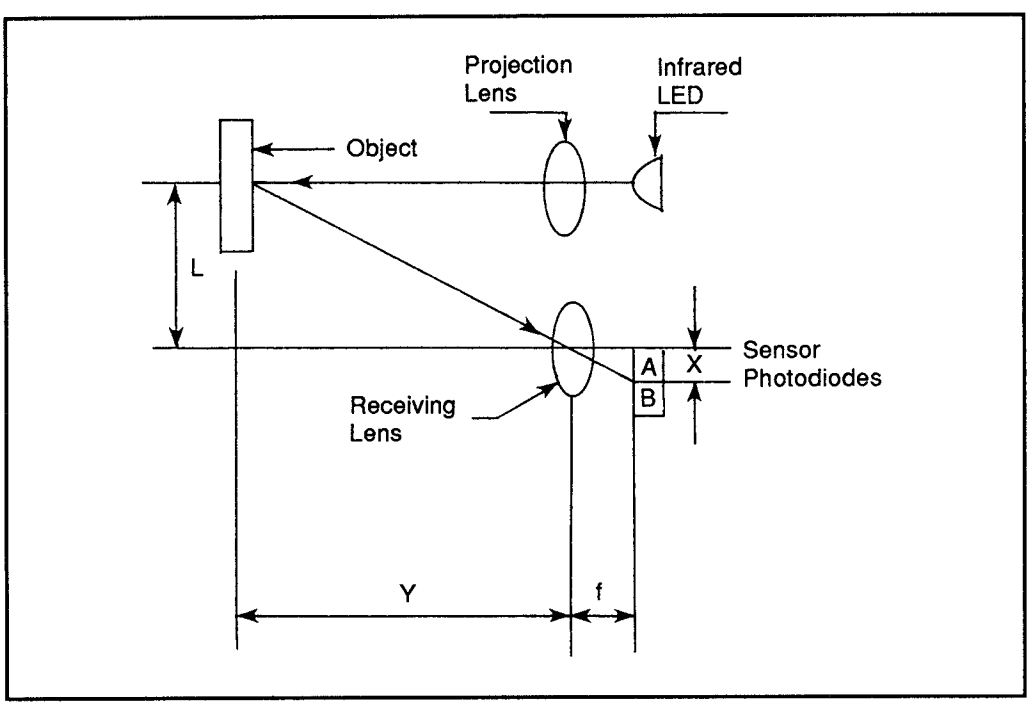

Figure 1: Infrared autofocus

Most often, autofocus is accomplished with the use of an infrared beam. This invisible beam is sent from the camcorder to the object and reflected back to the receiving lens.

Before suspecting a problem with the unit, try a test shoot of a stationary object, or switch to manual. Also, try cleaning the autofocusing lens.

Be aware that the infrared beam can react in unpredictable ways. Glass or water, for example, can cause difficulties, especially if either is dirty. Objects that are very dark, and particularly those that are black, might absorb so much of the infrared beam that the autofocus will not work.

Automatic Iris

The automatic iris controls the amount of light allowed to pass through the lens to the pick-up device. Some camcorders have the ability to use manual iris controls, others do not. The automatic iris mechanism is referred to a meter system that mechanically connects drive and brake coils.

Auto White Balance

The auto white balance circuit continuously adjusts and changes with fluctuations in illumination during shooting. This circuit controls the gain of the blue and red chrominance signals to maintain proper white balance. White balance is the adjustment of the recording system to the color temperature of the light illuminating the subject.

Some models may have preset switches that set the white balance circuits to average levels. These are typically balanced for outdoor (sunlight) and indoor (tungsten) lighting. There is also a position which puts the camera in the full auto white balancing mode. This allows you to white-balance the camera to a reference source (such as a white card).

The Lens

The lens of a typical camcorder will be an f1.2 lens with a 6-to-1 zoom ratio. The zoom control of the lens can be electronic or manual. Most camcorder lenses also include a macro function that allows you to focus on images as close as 1/2 inch.

Elecronic Viewfinder

The electronic viewfinder (EVF) is a mini black-and-white picture screen that allows videographers to see what they are shooting as it happens. The EVF can also review previously recorded material. Some EVFs can be purchased for full-color viewing. These are more costly and consume more power.

The EVF is like a mini-monitor and should be repaired in a similar fashion to a TV monitor.

Microphone and Earphone

Camcorders will have a built-in microphone that may be able to be removed, or muted. Most camcorders allow for the use of an external microphone. These microphones may be mono or stereo, depending on the type of camcorder.

Consumer-grade camcorders will rarely have a means of adjusting the audio level. A circuit inside automatically adjusts this level. An earphone, or headphone plug may be available for hearing what you are recording. A few camcorders have a built-in speaker in the left side of the camcorder (to be near the operator's right ear). The purpose is to allow the operator to monitor the audio while recording. If present, the speaker will have a volume control.

HQ Circuitry

Many camcorders have built-in high-quality (HQ) circuits. HQ technology improves the quality of VHS recordings, while keeping compatibility with conventional VHS machines. It does this by raising the white clip level and adding a detail enhancer.

TV Hookup

Most camcorders have some provision for hooking directly to a television receiver. This may be from an external RF converter or an internal converter. It may also be possible to hook up the separate audio and video lines from a camcoder to a VCR or TV receiver. RF connections will typically be 75 ohm and output on channel 3 or 4.

Power Supplies

The power for a camcorder is most often supplied by a battery pack. It may also be powered by an AC adaptor, which usually doubles as a battery charger. Batteries can allow up to 2 hours of continuous use before needing recharging. Before recharging, it is preferable that the batteries be completely discharged. Charging a battery after, for example, 15 minutes may cause the battery to develop a "memory". If the battery is not fully discharged it might "think" that the partial discharge is a complete discharge. If this happens, the battery will not perform at a maximum level, because the battery will "think", it is discharged when it is not.

The AC adaptor is electronically switchable to allow the use of power from anywhere in the world, using 110 or 240 V at 50 or 60 Hz.

The AC adaptor of many camcorders (Panasonic, GE, Philco, etc.) is the means through which the camcorder is connected to a television. The AC adaptor camcorder cable plugs into the camcorder. Then, the hookup to the monitor/TV is made either through separate video and audio connections or an RF cable.

5/Cam - TE
Test Equipment

Alignment Tools

To set-up and align the camera section of a camcorder, you need (in addition to standard test equipment):

- Monitor/TV
- Tripod
- Light source and meter
- Lightbox or pattern box
- Adjustment charts

The camcorder may have a lens reference mark used to position the camcorder a precise distance from the object being videographed. The lens reference mark (if one is used) will be located on the top of the lens. The service manual will indicate the proper distance for alignment.

Monitor/TV

A monitor/TV used for camera alignment must have some provision for overscan (the ability to see more picture than a normal TV). The monitor/TV should have the ability for separate video and audio inputs. This produces cleaner signals than going through an RF connection.

If you use a standard TV for viewing camcoder output during alignment, the vertical height can be adjusted to underscan the picture (this allows the viewing of the video switching point in relation to the start of the vertical blanking).

Tripod

The tripod may seem trivial, but without a tripod you will have great difficulty holding the camcorder steady enough to make adjustments. Any decent tripod will work for camcorder adjustments.

Light Source and Meter

In order to make camcorder adjustments, light levels must be at an acceptable color temperature (usually 3200°K). A 3200°K quartz lamp works best for this.

The correct color temperature is essential for proper adjustments.

A light meter that reads in lux is suggested to set proper light on a test chart. Most

service literature specifies light in lux levels rather than footcandles. (A footcandle is equal to 10 lux.)

Light Box or Pattern Box

The light box is an excellent light source and chart holder that produces a light of 3000°K at 100 lux within the box. The box is transparent and has clips or slots to hold the various adjustment charts.

The alternative method is to clip the charts to some kind of stand and flood the surface of the chart with the appropiate light source, at the proper distance.

Test/Alignment Charts

Kits with test/alignment charts can include a gray scale chart, color chart, Siemens star chart, resolution chart, autofocus chart and a backfocus chart. The charts are referenced and used during different alignment procedures. For instance, the backfocus chart is used to determine if the focus remains constant through the entire zoom range.

Alignment Setup

For tube cameras, the camera should be allowed to warm up for at least 30 minutes. Chip cameras don't usually need warm-up periods (although it wouldn't hurt for circuits that change due to temperature).

Make sure you are receiving a picture of the test chart on the monitor. The test chart should be illuminated at a level indicated by the service manual. The auto white balance circuit should not be active (unless the camcorder gives you no option). The camcorder should be set to the 3200°K position, when available.

There may be a provision for disabling the white balance circuit described in the service manual. This is usually a resistor connected across a pin for the auto white balance circuit of the camcorder.

Standard Test Equipment

For standard test equipment needed see article *"5/Cam - A."*

5/Cam - TR - EA
Electrical Adjustments

5/Cam - TR - EA - BC
Brightness and Contrast

Automatic Iris Level Adjustment

The automatic iris waveforms (AIC) are shown in Figure 1. If the level of this adjustment is set too high or too low, the picture will appear dark or bright under normal lighting.

The camera should be set to view the gray scale chart. The grayscale should fill the screen. The oscilloscope is connected to the video output. Use the horizontal rate to trigger the scope. The AIC controls should be adjusted for 700 ±10 mV peak-to-peak. Turn the chorma gain to the center after the AIC adjustment.

AGC

With the camera viewing the gray scale chart, the automatic gain control (AGC) can be set. The AGC test point is connected to the scope through a resistor (18 kΩ). The horizontal rate is used to trigger. Adjust the low-light gain

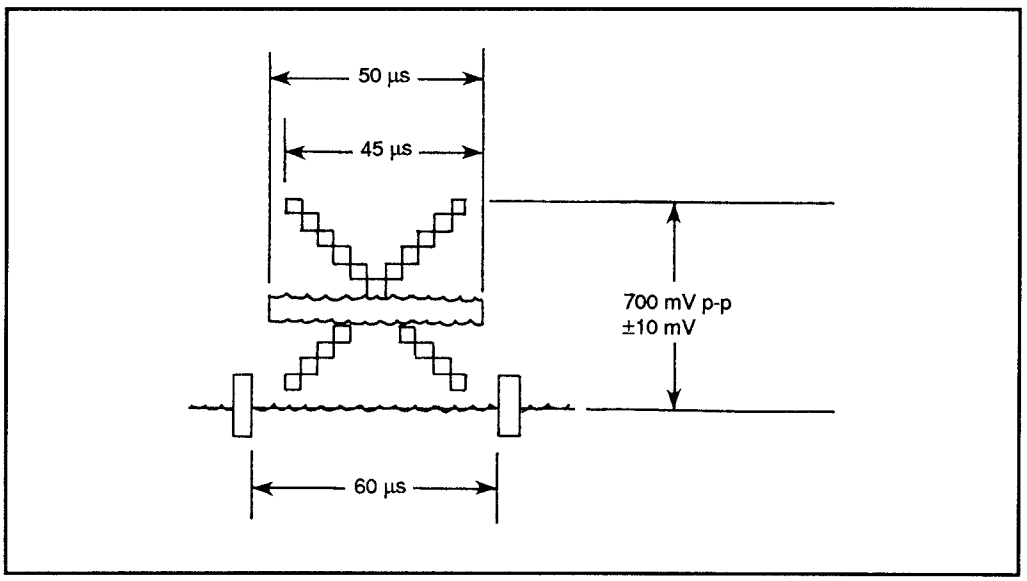

Figure 1: AIC level waveforms

control so the waveform is 600 ±50 mV peak-to-peak. This waveform is shown in Figure 2.

Dark Shading

Cap the camera for this adjustment. Figure 3 shows the waveforms associated with this adjustment. The oscilloscope is connected to the dark shading test point through a resistor (18 kΩ). The scope is triggered with the vertical rate. Adjust the dark shading vertical saw control and the dark shading vertical parabolic control so the waveform is flat. Trigger the scope with the horizontal rate. Adjust

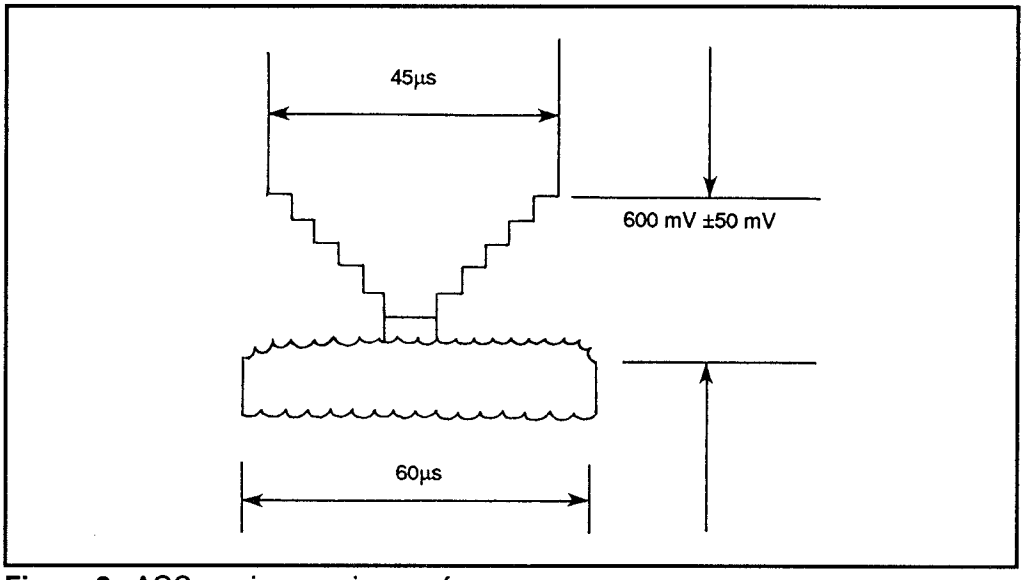

Figure 2: AGC maximum gain waveform

the dark shading horizontal saw control and the dark shading horizontal parabolic control so the waveform is flat.

Black Level

Figure 4 shows the waveforms for the black level adjustment. Cap the lens or close the iris. Connect the oscilloscope to the black level test point. Trigger the scope with the horizontal rate. Adjust the AGC offset control for 15 ±2 mV peak-to-peak from the blanking level to the center of the waveform. Connect the scope to the video output and adjust the Y setup control for 85 ±5 mV peak-to-peak from the blanking level to the center of the waveform.

Chroma Carrier Level

The waveform for the chroma carrier level adjustment is shown in Figure 5. The purpose of the adjustment is to set up the carrier level of the chroma signal. This helps ensure proper tint levels.

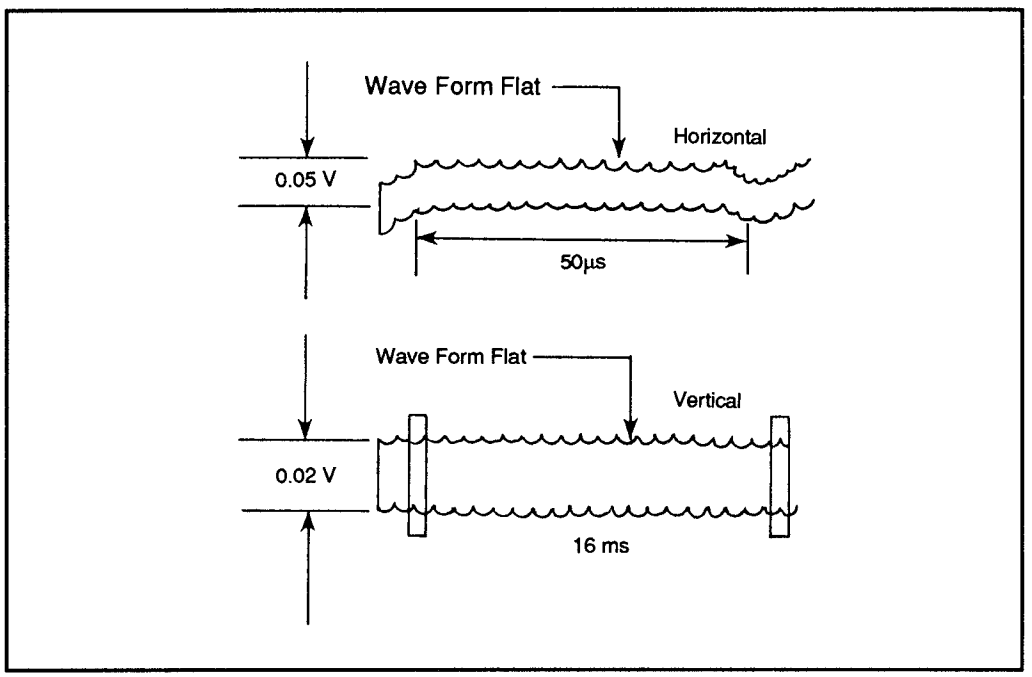

Figure 3: Dark shading waveforms

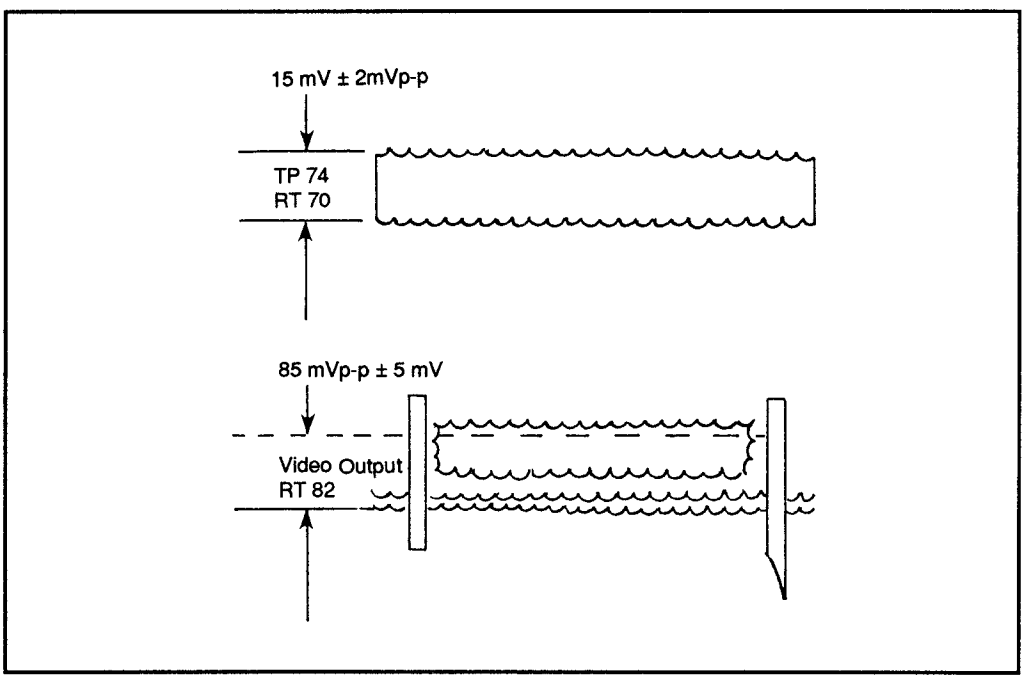

Figure 4: Black level waveforms

For this test, use the gray scale chart. The oscilloscope should be connected to the chroma carrier test point and triggered by the horizontal rate. Adjust the focus control to maximize the waveforms. Then, adjust the carrier gain contrl so the waveform is 700 mV ±50 mV peak to peak.

Chroma Set-Up

Dark areas in a video image may have color noise. This adjustment reduces the amount of possible color noise. This adjustment should be done with the lens capped or the iris closed. Figure 6 shows the related waveforms for this adjustment.

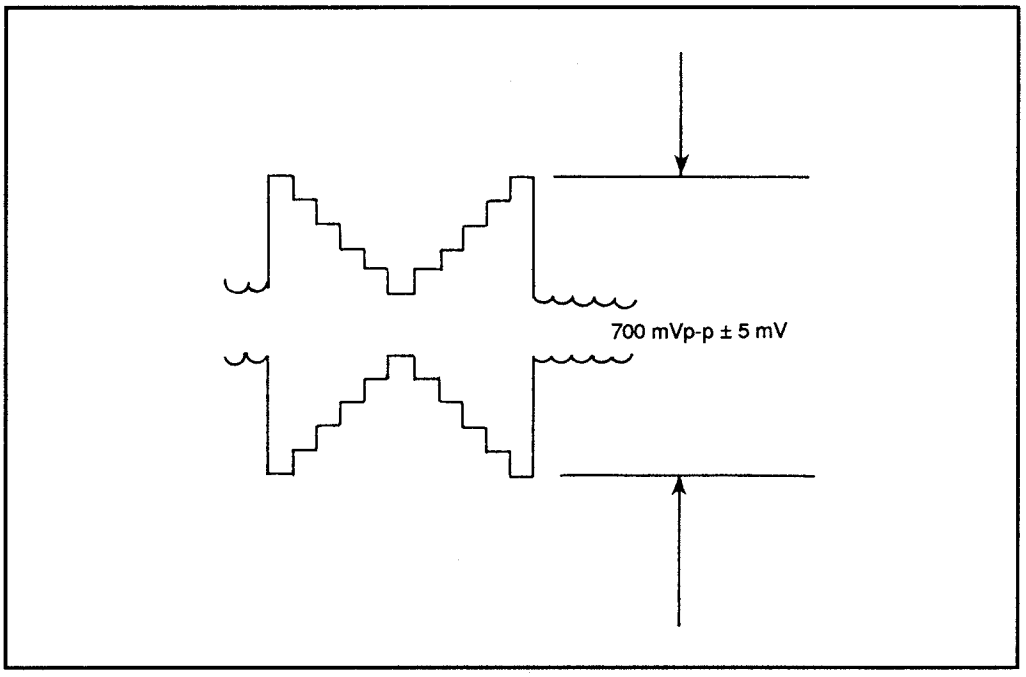

Figure 5: Chroma carrier level waveform

The oscilloscope will be connected to two test points—the blue chroma (channel 1) and the red chroma (channel 2) test points. Trigger the scope with the horizontal rate.

Adjust the blue setup control so the chroma level at channel 2 matches the blanking level. Adjust the red setup control so the chroma level at channel 1 matches the blanking level.

Tracking Preset

The waveforms associated with the tracking preset are shown in Figure 7.

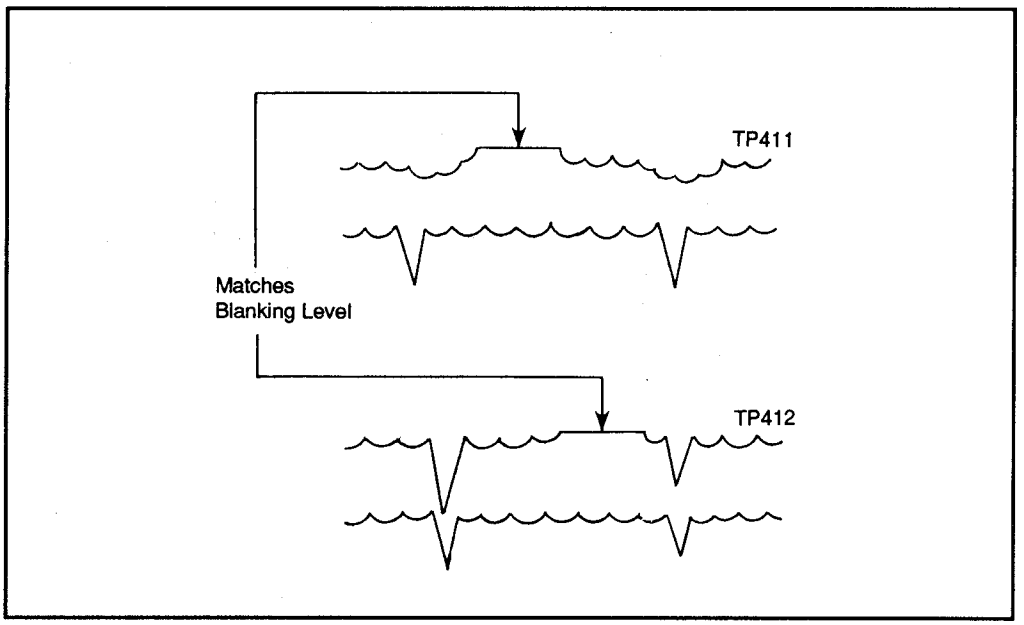

Figure 6: Chroma set-up waveforms

Use the gray scale chart and the oscilloscope. Fill the monitor screen with white. Connect the oscilloscope channel 1 to the blue test point and channel 2 to the red test point.

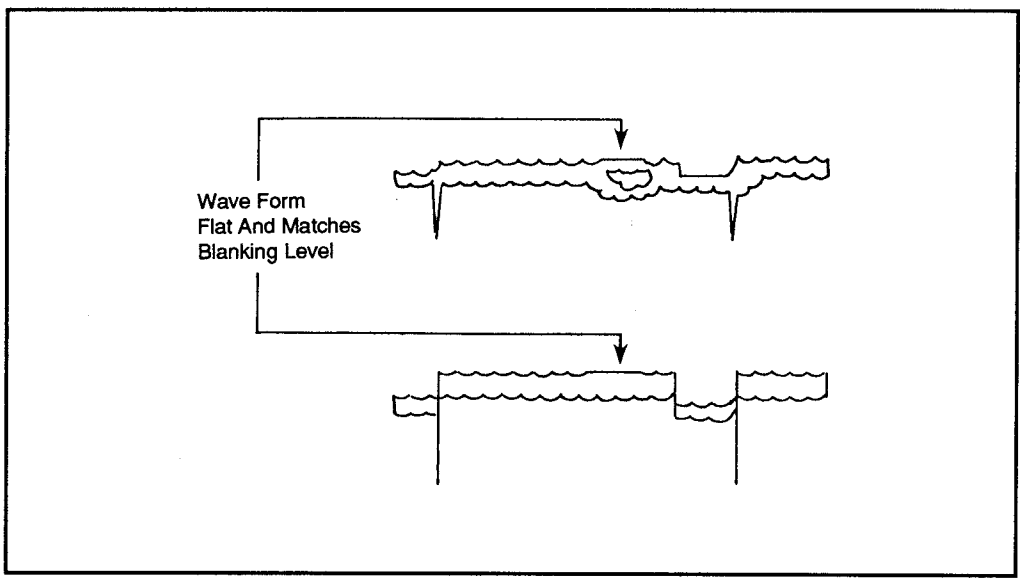

Figure 7: Tracking preset waveforms

Trigger the scope with the horizontal rate. Adjust the blue tracking 2 control and the blue tracking 3 control to make the waveform flat and match the blanking level of the blue signal.

Do the same for the red tracking preset at the red tracking test point and controls.

Confirming White Balance

Check to see if the white balance is working properly in both the manual and auto modes. If there is a big difference between the two modes, the chroma setup may need to be readjusted. R and B signal separation, R and B gain and tracking adjustments may also need to be made.

5/Cam - TR - EA
Electrical Adjustments

5/Cam - TR - EA - C
Chroma Setup

R and B Signal Shading Release

Both channels of the oscilloscope are required to make these adjustments. The R and B signal shading waveforms are shown in Figure 1.

Channel 1 of the scope is hooked to the R signal shading release test point. Channel 2 is hooked to the B signal shading release test point. The scope will be triggered with the horizontal rate.

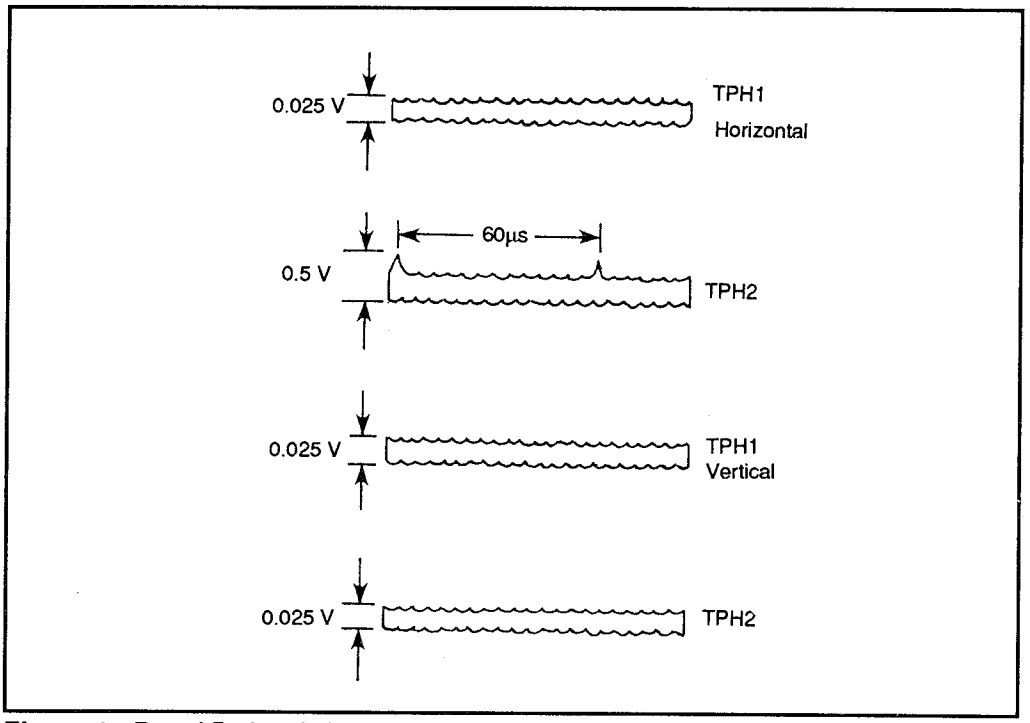

Figure 1: R and B signal shading release waveforms

Adjust the red shading horizontal control and the red shading horizontal parabolic control to make the waveform for channel 1 flat. Adjust the blue

shading horizontal control and the blue shading horizontal parabolic control to make the waveform for channel 2 flat.

Trigger the scope with the vertical rate. Adjust the red shading vertical control and the red shading vertical parabolic control to make the waveform for channel 1 flat. Adjust the blue shading vertical control and the blue shading vertical parabolic control to make the waveform for channel 2 flat.

R and B Signal Separation Preset

The waveforms associated with the red and blue signal separation presets are shown in Figure 2.

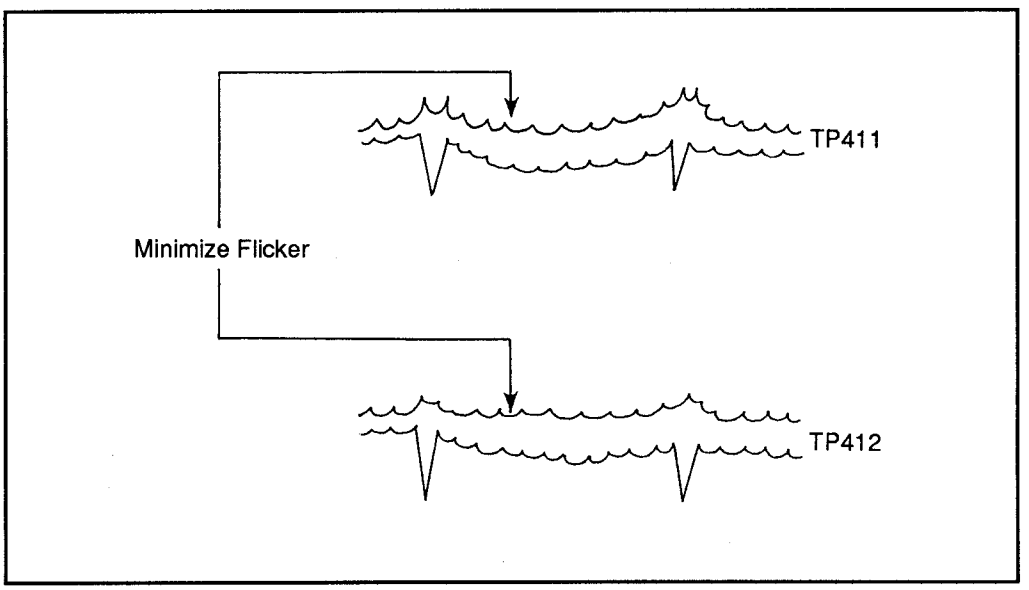

Figure 2: R and B signal separation preset waveforms

Aim the camera at a white source (the lightbox or a white chart). Connect channel 1 to the blue test point and channel 2 to the red test point. Adjust the separation phase control and separation gain control for minimum flicker in the waveforms.

R and B Signal Gain Preset

The waveforms associated with the red and blue signal gain presets are shown in Figure 3. Aim the camera at a white source. Connect channel 1 to the blue test point and channel 2 to the red test point. Adjust the blue gain control so the top of the chroma level at channel 1 matches the blanking level.

R and B Shading Preset

The waveforms associated with the red shading preset are shown in Figure 4. Use the white chart or lightbox and the oscilloscope. Fill the monitor screen with white. Connect the oscilloscope to the red test point.

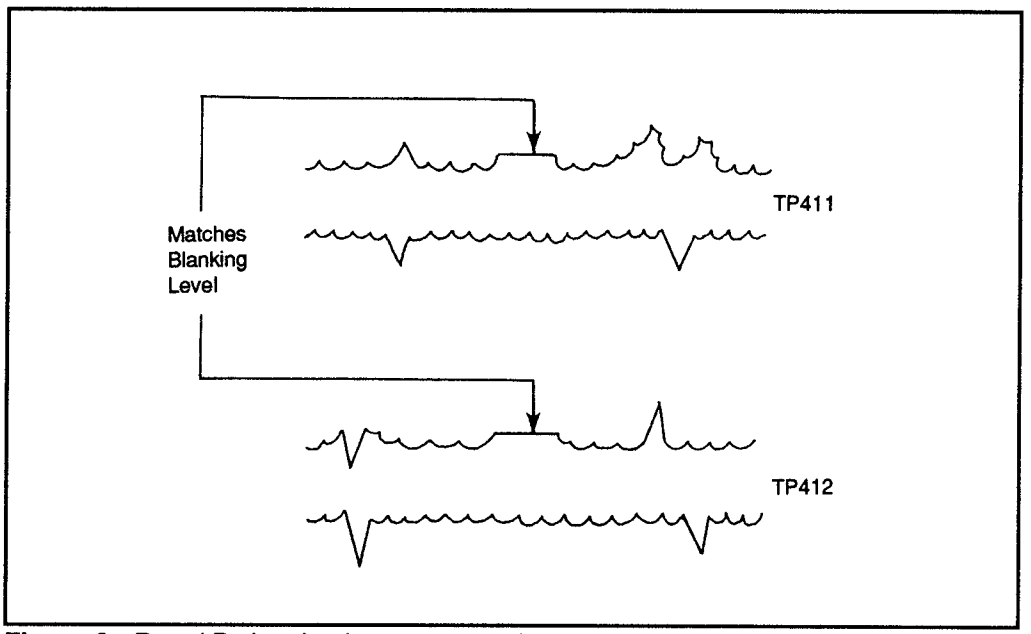

Figure 3: R and B signal gain preset waveforms

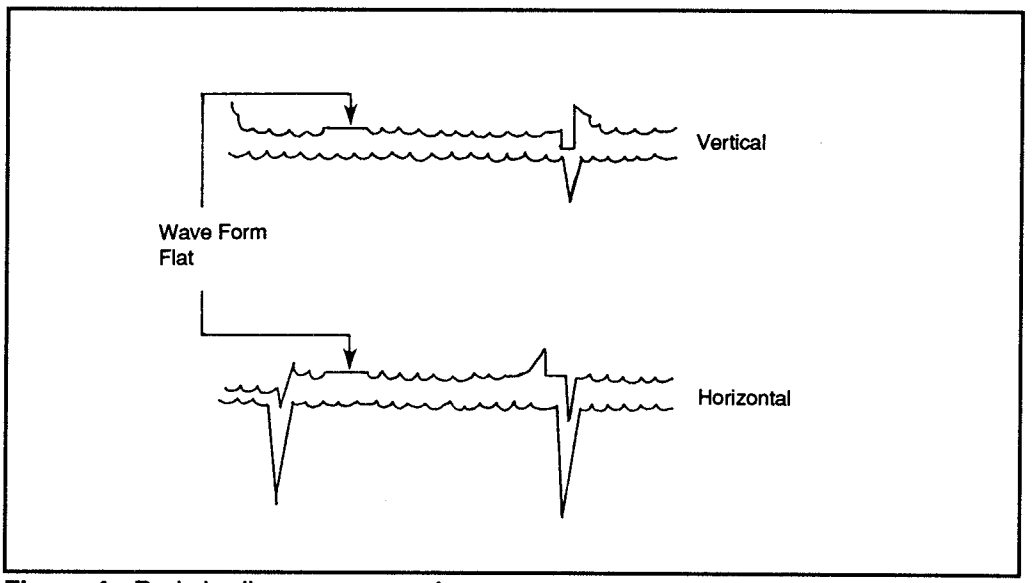

Figure 4: Red shading preset waveforms

Trigger the scope with the horizontal rate. Adjust the red shading horizontal saw control and the red shading horizontal parabolic control to make the waveform flat. Do the same for the blue shading preset at the blue test point and controls.

Burst Frequency Adjustment

The burst frequency adjustment sets the burst or subcarrier oscillator at the correct frequency. If the subcarrier is set improperly, color, sync, and tint problems can arise.

To set the burst frequency, connect a frequency counter to the subcarrier test point. Adjust the burst or subcarrier oscillator to a reading of 3.579545 MHz (3.58 color burst) with a ± of 20 Hz on the frequency counter.

5/Cam - TR - EA
Electrical Adjustments

5/Cam - TR - EA - F
Focus

Backfocus Adjustment

The backfocus adjustment ensures a proper focus through the zoom range. If the backfocus is set wrong, a subject in focus when zoomed-in (telephoto) will not be in focus when zoomed-out (wide angle).

Use the backfocus chart. The chart illumination for the chart should be between 50 and 100 lux. The camera should be positioned 10 ft. (3 m) from the test chart and level with it. Set the lens to the 10 ft. (3 m) position.

Locate the backfocus screw. You may have to remove more than just the casing to locate this screw. It should be located on one side of the back of the lens. The screw could be a hexagonal, Phillips or flat-head screw. Loosen it.

Zoom-in (telephoto) and adjust the lens focus for the best focus on the monitor. Zoom-out (wide angle) and see if the focus changes. If it does, insert the backfocus adjustment driver into the adjustment point. Adjust the backfocus for the best possible focus on the monitor.

Zoom-in again and adjust the lens for the best focus. Zoom-out and adjust the backfocus again. Continue to do these steps until the focus seems to remain steady through the entire zoom range. Remember to tighten the backfocus screw when finished to lock the backfocus.

Dynamic Focus Release

The oscilloscope will be needed to make this adjustment. The camera lens cap should be on.

The oscilloscope is hooked to the horizontal rate for the trigger and the dynamic focus test point. The horizontal dynamic focus is adjusted to make the waveform as flat as possible.

Next, trigger the scope with the vertical rate. Adjust the vertical dynamic focus controls, saw control and parabolic control to make the waveform flat.

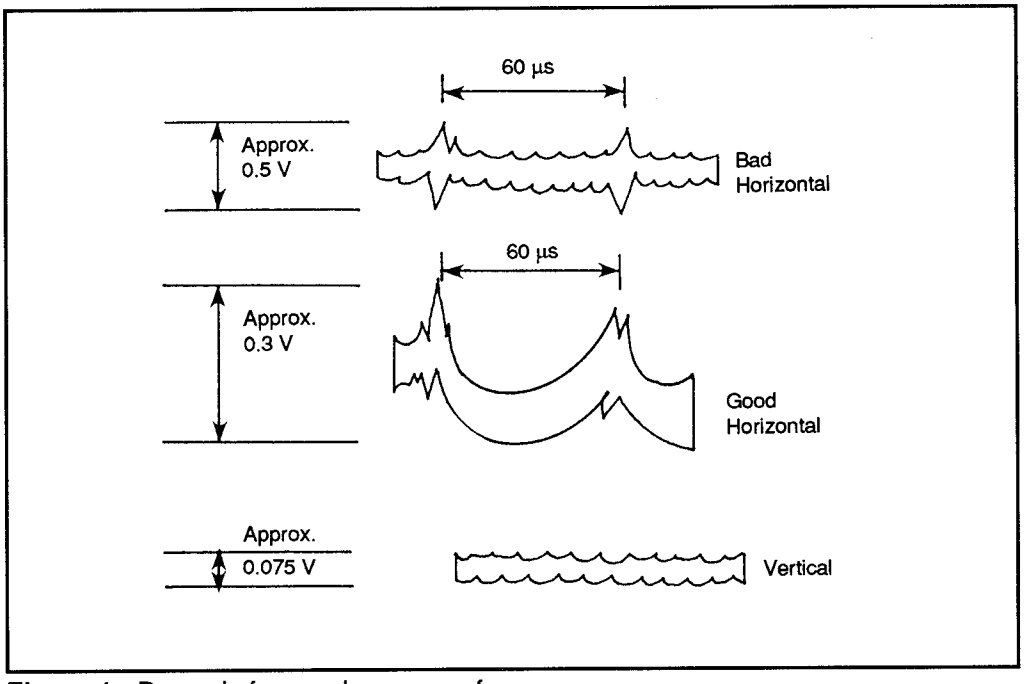

Figure 1: Dynamic focus release waveforms

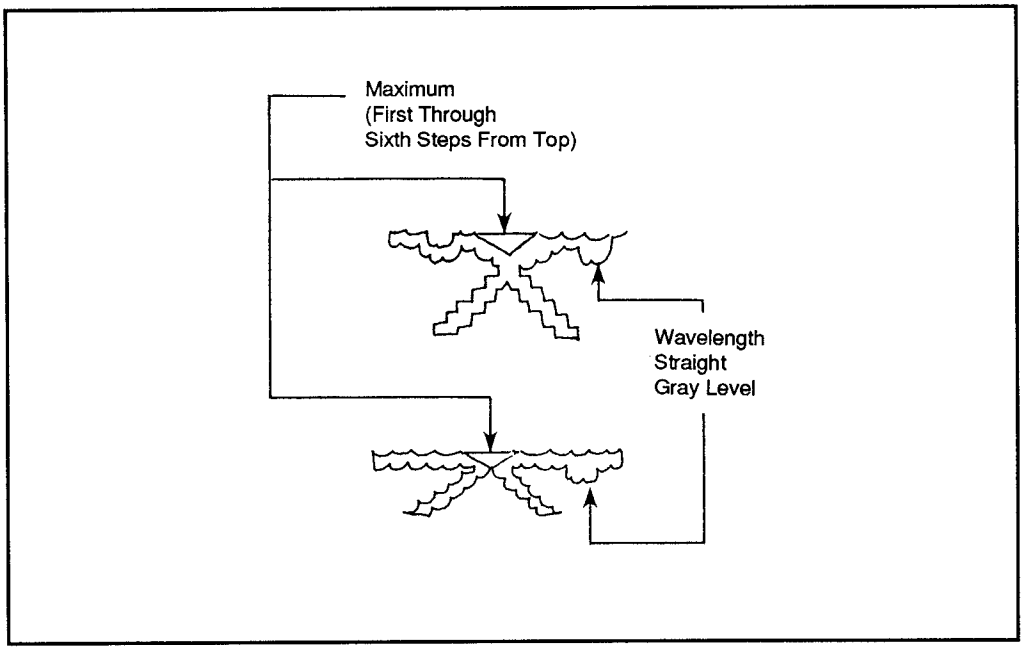

Figure 2: Focus preset waveforms

Focus Preset Adjustment

The waveforms associated with the focus preset adjustments are shown in Figure 2.

Use the gray scale and the oscilloscope. Connect to the composite luminance test point a 47 µF/16 V electrolytic capacitor to ground. Connect channel 1 to the blue test point and channel 2 to the red test point. Trigger the scope with the horizontal rate.

Adjust the focus control so the gray level of the waveform is straight, and the first through sixth step from the top are at maximum. The waveform may fluctuate and the separator phase and separator gain controls will need to be adjusted. Then adjust the focus control as previously mentioned.

Dynamic Focus Preset

The waveforms associated with the dynamic focus preset are shown in Figure 3.

Use the white chart or lightbox and the oscilloscope. Fill the monitor screen with white. Connect channel 1 to the blue test point and channel 2 to the red test point. Trigger the scope with the horizontal rate.

Adjust the dynamic focus horizontal parabolic control and the dynamic focus horizontal saw control to make the waveforms flat.

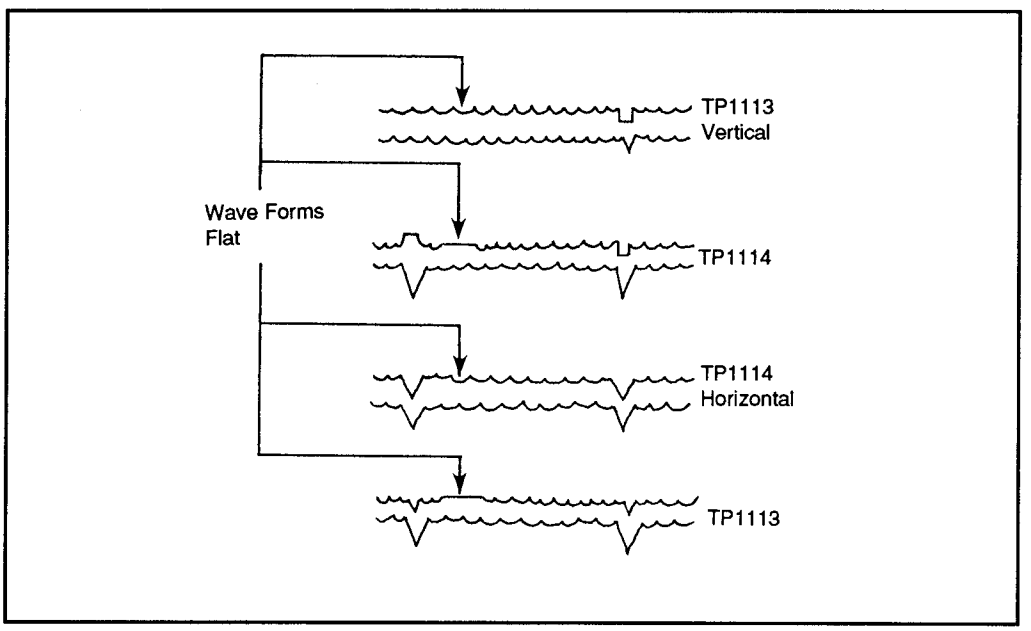

Figure 3: Dynamic focus preset waveforms

Trigger the scope with the vertical rate. Adjust the dynamic focus vertical parabolic control and the dynamic focus vertical saw control to make the waveforms flat.

You may have to repeat the adjustments several times to achieve the best results. The two adjustments tend to interfere with each other to a degree.

5/Cam - TR
Troubleshooting and Repair

5/Cam - TR - PS
Power Supplies

The most common problem is a dead camcorder. This is usually caused by a blown fuse, poor battery power, or poor AC power. If the camcorder does not work properly when a battery is inserted, the problem is usually the battery and not the camcorder. Replace the battery with a fresh one, or try the AC adaptor to make sure the camcorder is not at fault. (Note that low battery power can also cause the camcorder to behave erratically.)

Check the battery terminals and the connectors on the camcorder. Improper connections, or intermittent connections can lead you to believe the battery is at fault. Even if you don't suspect the connectors, clean them.

Be aware that the battery pack or AC adaptor must be for that particular camcorder. There are no specific standards. If the battery or adaptor isn't the right one, the camcorder won't work.

If the fuse blows or the camcorder works intermittently, check to see if the fuse is seated well. It may have poor contact, or loose contact causing intermittent operation. Make sure the fuse is a proper fuse replacement. A fuse with a value too low may be blown each time the unit is turned on. One with too high a rating won't protect the unit. A fuse may be found in the camcorder on the power board, as well as in the AC adaptor.

AC Adaptor/ Charger

A typical AC adaptor/charger circuits are shown in Figure 3. The circuit will automatically compensate for voltage variations in line voltage and frequency to maintain the rated output voltage. It does not require changing switches to operate properly. The voltages can range from 100 to 240 V and 50 to 60 Hz. Output from the power supply may be 6 V, 7.2 V, 9 V, and 12 V. When charging, the output will be at a voltage level with 1.2 A.

To begin testing an AC adaptor, plug in the unit and test the output for proper voltage. A single voltage output will typically be 12 V. To test the charging

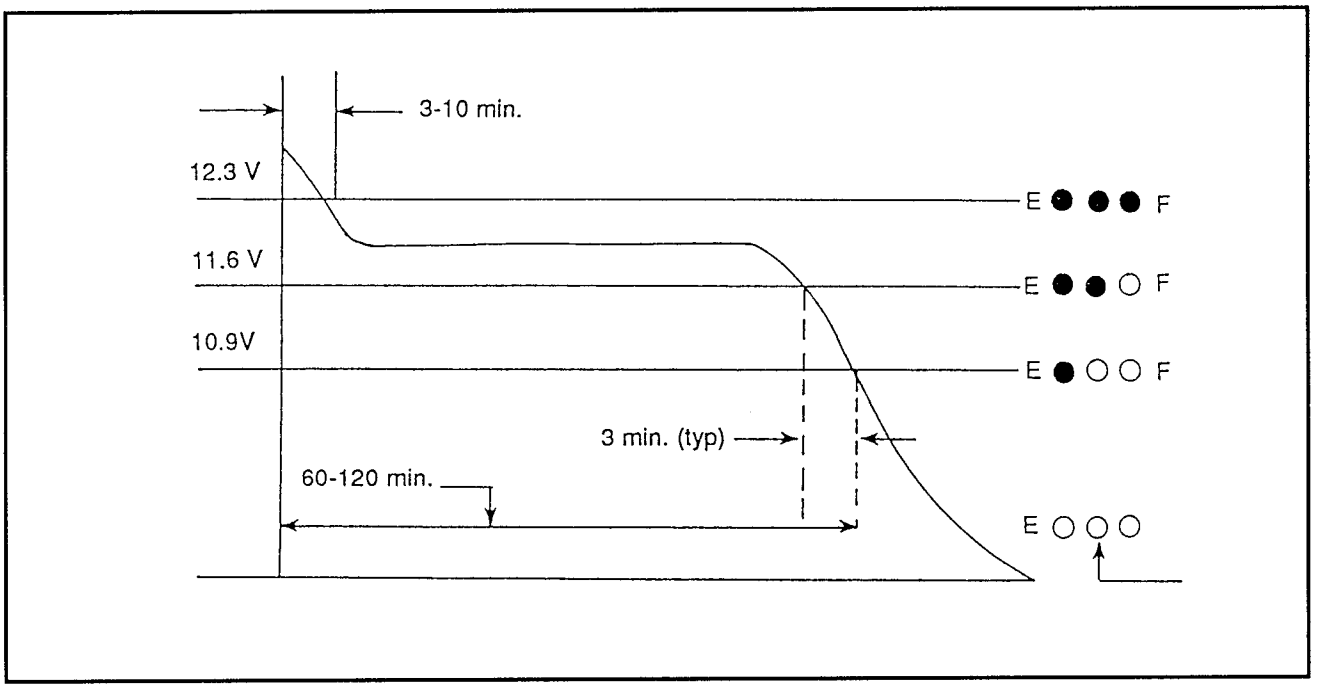

Figure 1: Graph of the average life of a typical camcorder battery

connections, attach a 20 Ω, 10 W resistor across the charging terminals and measure the output voltage. This will determine if the output from the AC adaptor/charger is dead.

If the unit supplies voltage but will not charge a battery, the voltage/charge switch may be dirty. If it is completely dead, open the case and check the fuse. Replace the fuse with the same type and rating. If there is more than one fuse, check each of them. (Some adaptor/charger units are sealed. Disassembly may not be possible without damaging the case.)

Next, check to see if there is voltage across the bridge rectifier unit. Measure voltage across the large filter capacitor. Make sure there are no sensor switches that must be activated for the adaptor to work, or when a battery is inserted into the charger. If there are sensor switches that must be activated, short, or close the switches.

If there is a blown fuse when you open the adaptor, replace the fuse and try the unit again. It is possible that a power spike blew the fuse. The fuse will typically be rated at 2 to 3 A. If the adaptor continues to blow fuses, there could be a short in the bridge rectifier. Diodes in the bridge rectifier can sometimes become

shorted. Check across each diode for leakage. If any are defective, replace the entire bridge. Refer to the service manual for specific information on power at various test points in the charger and check these locations. Make random diode and transistor checks to ensure there are no leaky or shorted components.

It is possible there is an overload somewhere in the adaptor, or that an oscillator circuit is not operating properly. There may be anywhere from two to four ICs within the adaptor. One is used for the primary control oscillator and the others are used for the voltage control and charging circuits. Voltage checks on ICs may show a leaking IC that needs to be replaced. Remove the V_{CC} supply pin from the circuit board and measure to ground for a low resistance. This resistance will most likely be under 1 KΩ.

Random check the transistors and diodes to see if any are leaky or shorted. There should be a low resistance in one direction on good diodes and transistors. You should find that most transistors in an AC adaptor will be NPN types. The use of a transistor checker can be very helpful in locating a bad transistor, or the DMM with diode checking and/or transitor checking.

Batteries and Chargers

Batteries that do not charge may indicate a defective battery and not a defective charger. If other batteries charge, the charger is not at fault. A battery may be unable to recharge because of defects or memory problems. Try discharging the battery completely and recharging it. If after a few hours the battery does not take a charge, it is probably dead.

Check to see if the battery charger is good (as above). Very low voltage output could indicate a defective charging circuit or a faulty charge/voltage switch. The adaptor may work fine when used as the power source for the camcorder, but still not charge the batteries. Check to see if the charge/voltage switch is working properly. Try shunting the switch and retesting the charger section. Systematically check the diodes and ICs that lead back from the charging output.

The average life graph of a battery is shown in Figure 1 as related to the EVF battery display. Batteries supplied with camcorders are most often the type rated for one hour of operation before requiring charging. Manufacturers do not always supply two-hour batteries with their camcorders. These can usually be purchased as extras.

When the battery voltage is at 12.3 V or more, the EVF display will indicate a

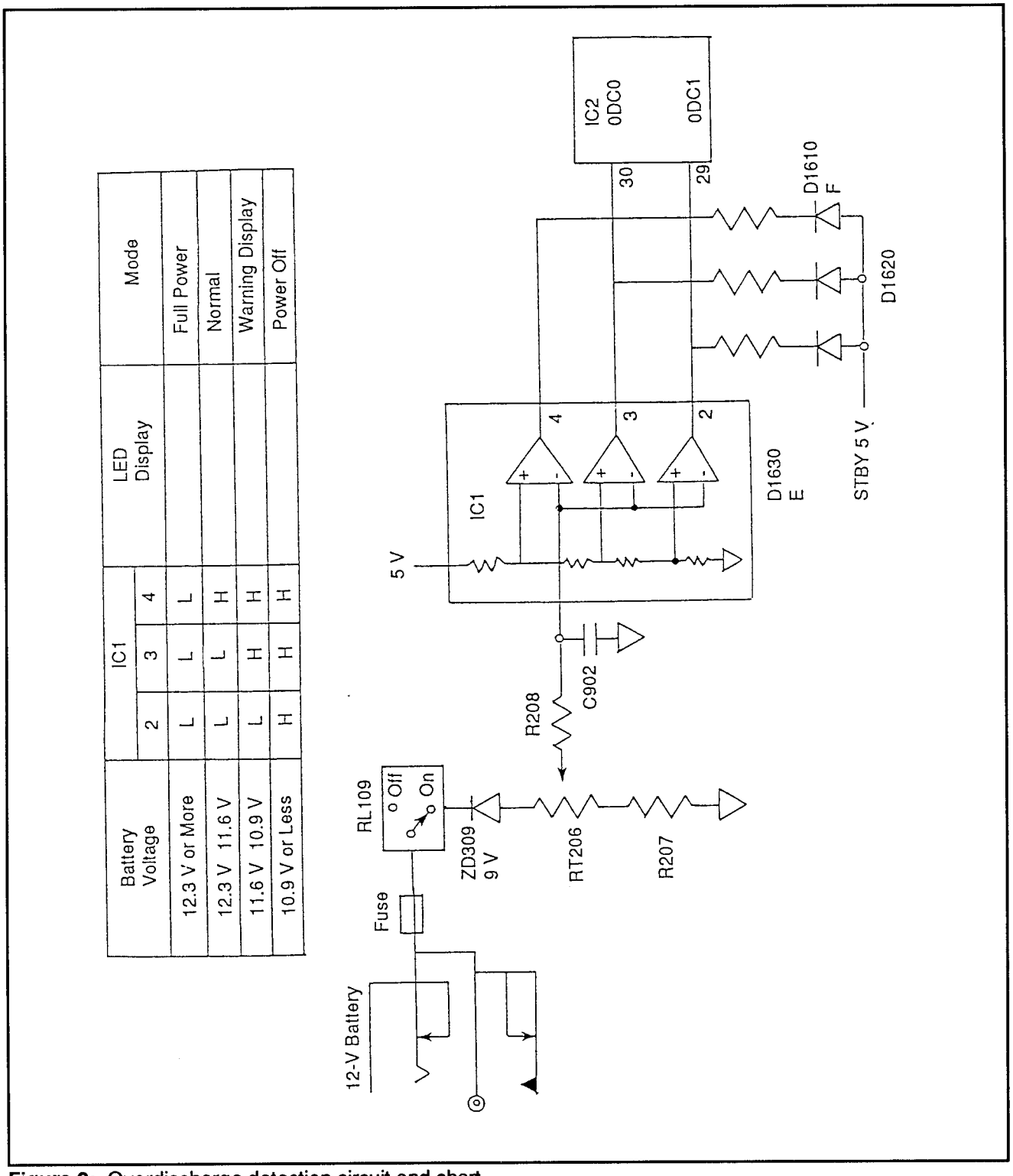

Battery Voltage	IC1 2	IC1 3	IC1 4	LED Display	Mode
12.3 V or More	L	L	L		Full Power
12.3 V 11.6 V	L	L	H		Normal
11.6 V 10.9 V	L	H	H		Warning Display
10.9 V or Less	H	H	H		Power Off

Figure 2: Overdischarge detection circuit and chart

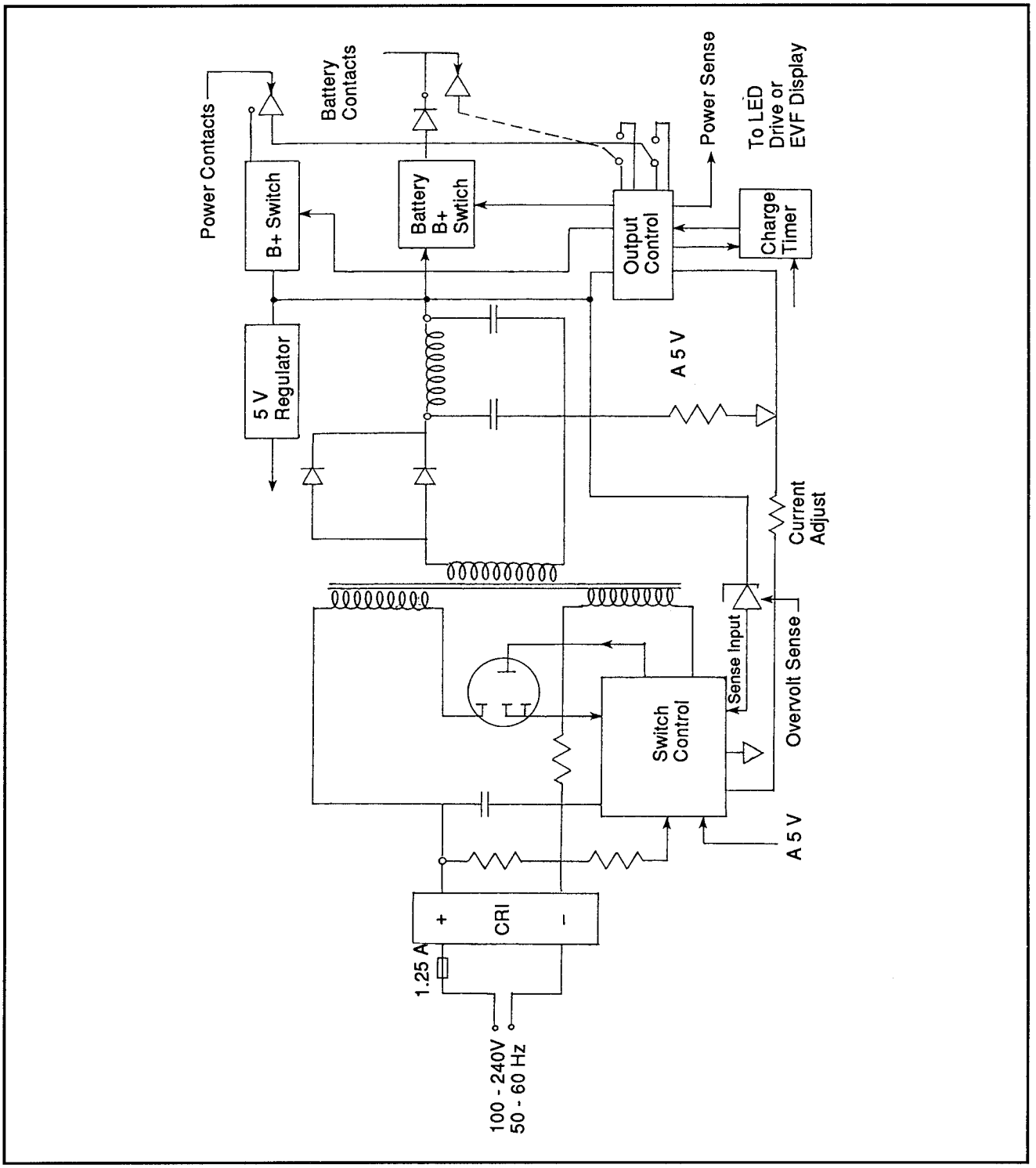

Figure 3: Typical AC adaptor/charger

full battery, or E—F. When the voltage is between 11.6 V and 12.3 V, the display changes to E—. As the voltage drops to between 10.9 V and 11.6 V, the indicator will be E-, which indicates about 3 to 5 minutes of operation left.
When the voltage drops below 10.9 V, the unit shuts down. There is still enough power to eject the tape from the machine.

The camcorder has an overdischarge dectection circuit (ODC) as shown in Figure 2. This circuit can be checked by varying the input voltage of the camcorder to the levels indicated and seeing if the display changes according to the chart.

5/Cam - TR
Troubleshooting and Repair

5/Cam - TR - VM
Voltage Measurements

Assuming the power supply or the battery is operating properly, the next step is to check the voltage as it travels through the camcorder. Improper voltages can

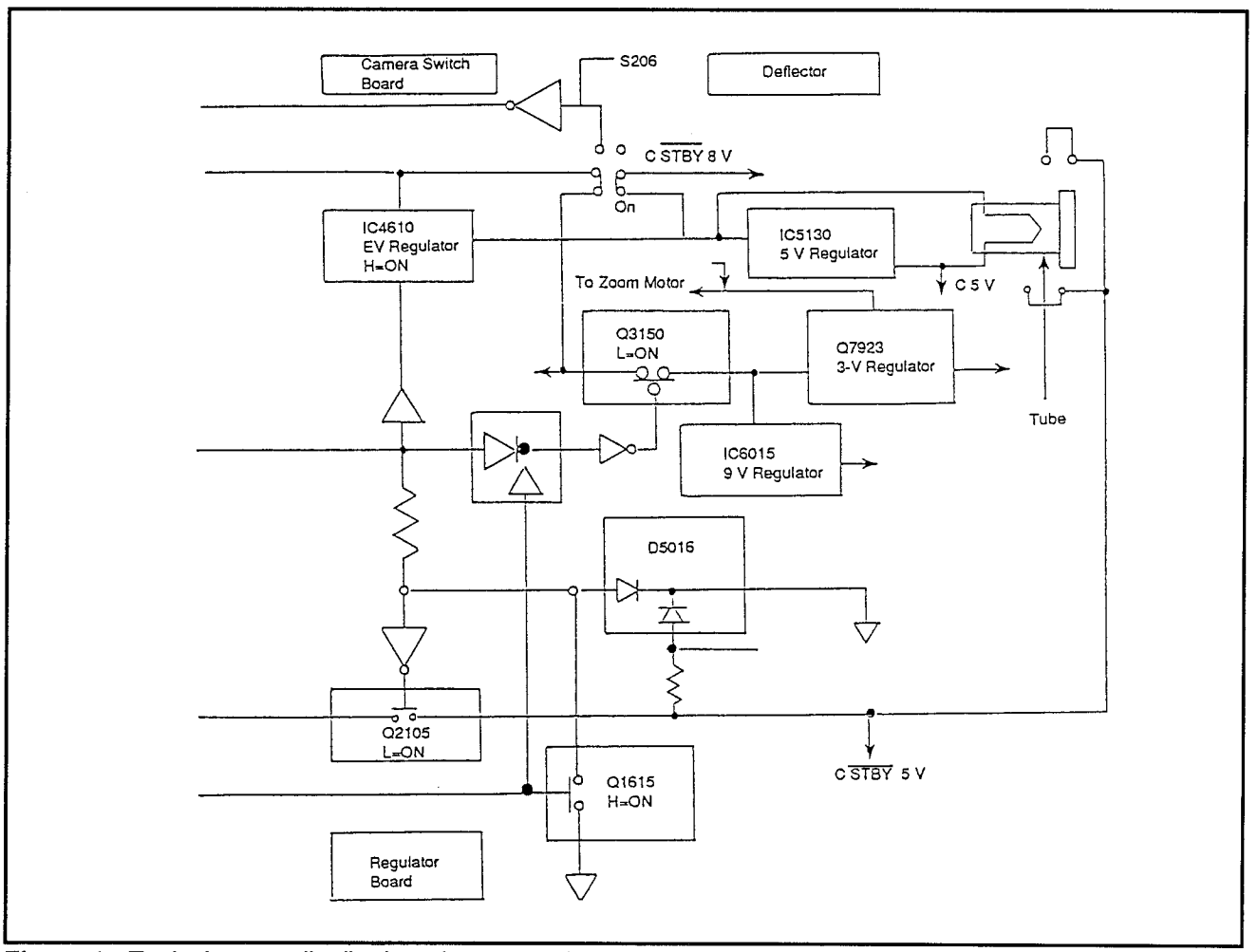

Figure 1: Typical power distribution of a camcorder.

cause a variety of problems. Separate voltage charts may be found in the back of the service manual. These voltages may be broken down as to what voltages occur during what operation (i.e. stop, record, play). Figure 1 shows the typical power distribution of a camcorder.

All power for the camcorder, both the camera and VCR sides is controlled by the power distribution circuits. The power from the battery or AC adaptor enters through the power input junctions. This is a switch-controlled input that allows the camcorder to switch power from the adaptor or battery. In some cases this allows you to charge the battery while using the camcorder.

Note that the 12 V input power will be passed through a fuse to a start-up transistor and applied to a 5 V and a 9 V regulator. The camcorder will turn on momentarily, then go into standby operation. During standby, the relays are inactive (off) and do not allow power to be sent to any of the regulators. This reduces power consumption.

When the Standby/Operate switch is pressed, the relays in the power section will change state and apply power to the various circuits. The output voltages will be 12 V, 9 V and 5 V where needed. The same circuit activates when the Eject button is pushed if the unit is in the standby mode.

If the camcorder does not turn on with the pressing of the Standby/Operate switch, or the Eject button, check to be sure that there is a good input power supply (AC adaptor or battery). Next check to see if the fuse in the power section is not blown. If so, replace it to see if the fuse blows a second time. If the fuse blows a second time, there could be a problem with one of the power section ICs, a diode in the input line to the ICs, or any of the various motor drives.

Check to see if there is power at the control IC when the Standby switch is pressed (refer to the service manual for this chip).

Next, check each regulator and detect whether or not the correct power is exiting the power section. If the regulators are not functioning, suspect a faulty transistor which controls the power sent to the regulators. Check to see if the needed 12 V reach the regulators. If not, suspect a leaky transistor or a relay that is not functioning. (The relay may not be functioning because of a faulty transistor.)

Check to see if the standby line is supplying the 5 V required. If not, then suspect a leaky transistor or diode error. Check the logic of the control IC. If low, the normal mode is activated and all circuits should be operating. If high, check that the switch has been set to the normal or operate position.

5/Cam - TR - VP
Video Processing

5/Cam - TR - VP - CC
Control Circuits

Autofocus Control Circuits

Figure 1 shows the typical autofocus control circuits. The autofocus control circuit is found in the lens assembly. The circuits use an infrared light (IR) projected through a lens to a full-reflection mirror and then reflected back to a dichroic mirror. The dichroic mirror passes the visible light (picture being shot) to the pick-up and reflects the IR light. The reflected IR is passed to an object, shot through a complex lens, and then reflected back from the object through a condensing lens to a sensor. The two IR sensitive photodiodes in the sensor produce a signal that adjusts the lens focus so that the reflected IR light is equal on both sensor photodiodes. This type of measuring is known as the delta measurement principle.

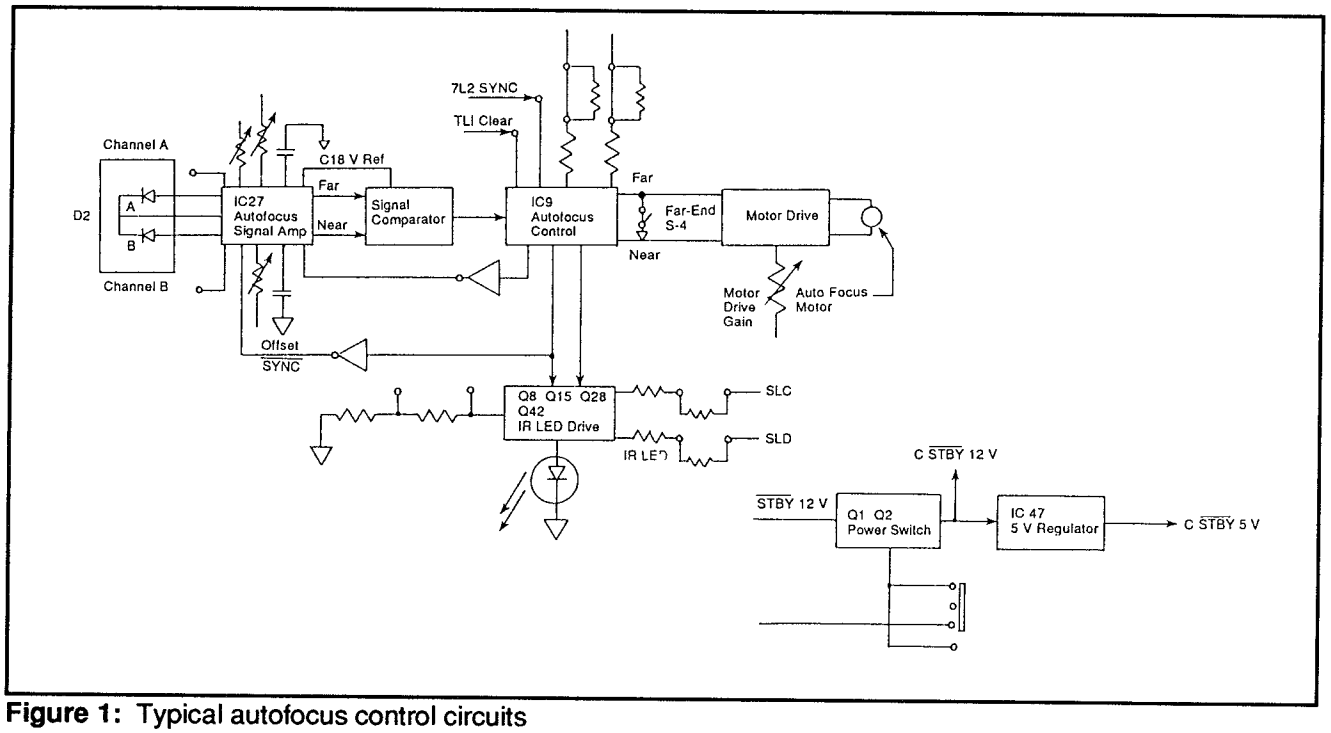

Figure 1: Typical autofocus control circuits

Troubleshooting the autofocus assumes that the focus control works manually. If not, there is a problem within the lens. Begin by making sure the autofocus function is active and the lens cap is off.

The voltage input to the circut should be checked to see if it is present. If absent, locate the lost signal and repair (it may be a fault switch). Check for the reference voltage of the IC (3 V). If absent the IC may be bad.

Next check to see if there are signals present at the photodiodes. If not present, check to see if the IR LED is getting a signal. If not, suspect a fault in one of the gate ICs.

Continue checking the circuit as referred to in the service manual. Any one of the ICs could be bad. A diode may have failed, or the sensors may be malfunctioning. Replace either the entire board or, (if possible) replace the individual component.

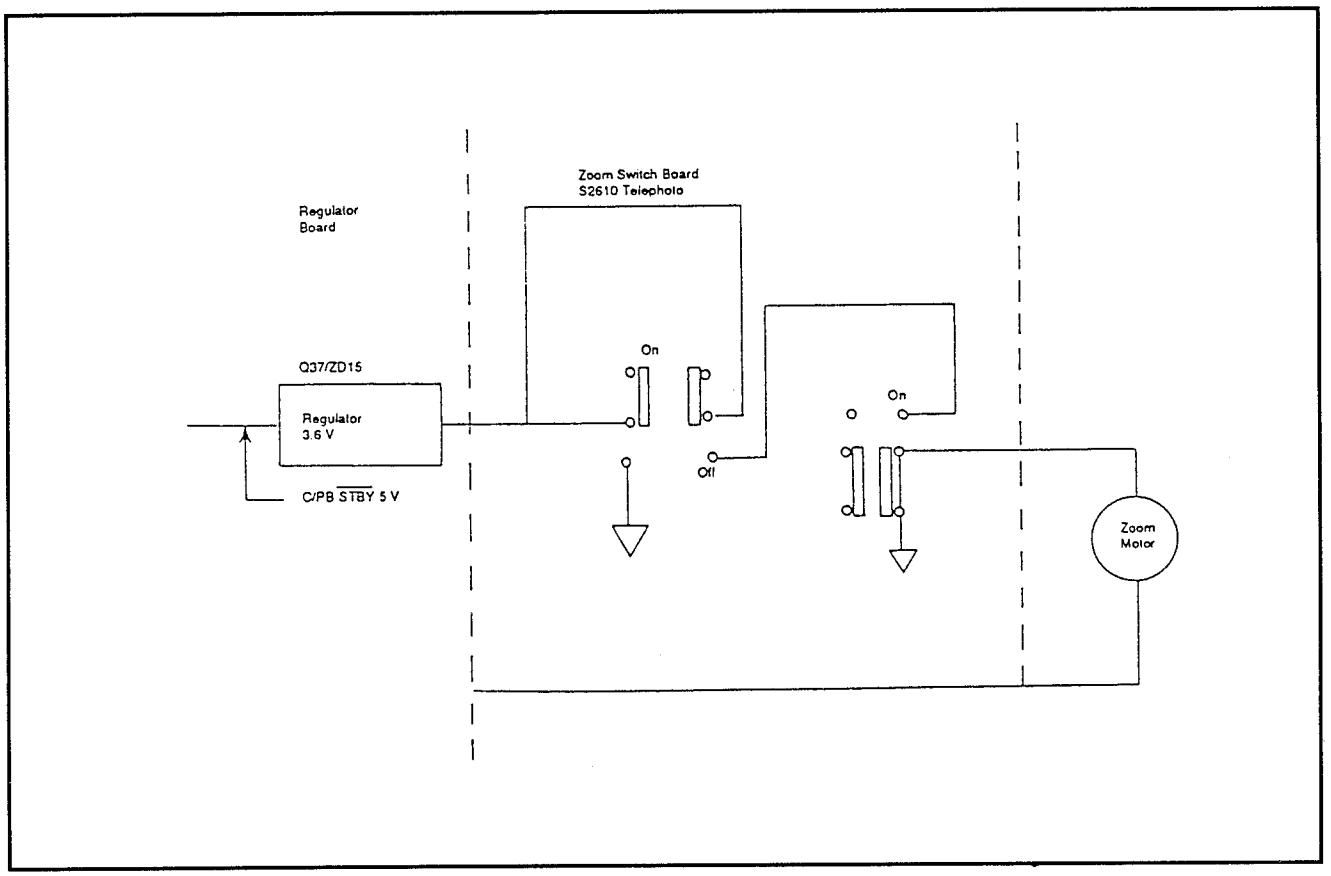

Figure 2: Typical zoom motor control circuit

Zoom Motor Control Circuit

Depending on which button is pressed, the zoom control motor will rotate the lens in the telephoto or wide angle direction. The zoom control circuit has an onboard voltage regulator (3.6 V) which is used to supply power to the zoom motor. To troubleshoot the zoom control, simply press each of the button directions and see if the zoom motor moves the lens in and out. If it doesn't move, check the wiring between the switches and the motor. Check to see if the gear is making the proper connection. Check to see if the voltage regulator is operating properly.

Iris Control Circuit

The iris control of modern day camcorders works similar to the camera aperture. Within the iris mechanical system section is the auto iris circuit (AIC).

The auto iris circuit operates the lens iris in order to maintain an average video level. Figure 3 shows a block diagram of the AIC. The Y-signal from the dark-clip circuit is applied to a filter composed of a capacitor and variable resistor. The average level of the Y-signal is amplified in the AIC IC which is based on the reference voltage at the inverting input. The reference voltage is a combination of feedback from the iris motor and the voltage set by the AIC control resistor (the external iris control) and the internal preset resistor.

As the average lighting of a scene decreases, the Y-signal output also decreases. The iris motor is opened/closed by the difference between the reference voltage (9 V) and the output of the motor driver. When the average motor driver output increases, the iris will close.

White Balance Circuit

These white balance circuits control the gain of the R and B signals to produce a proper white. Equal amounts of red, blue, and green are needed to produce proper white.

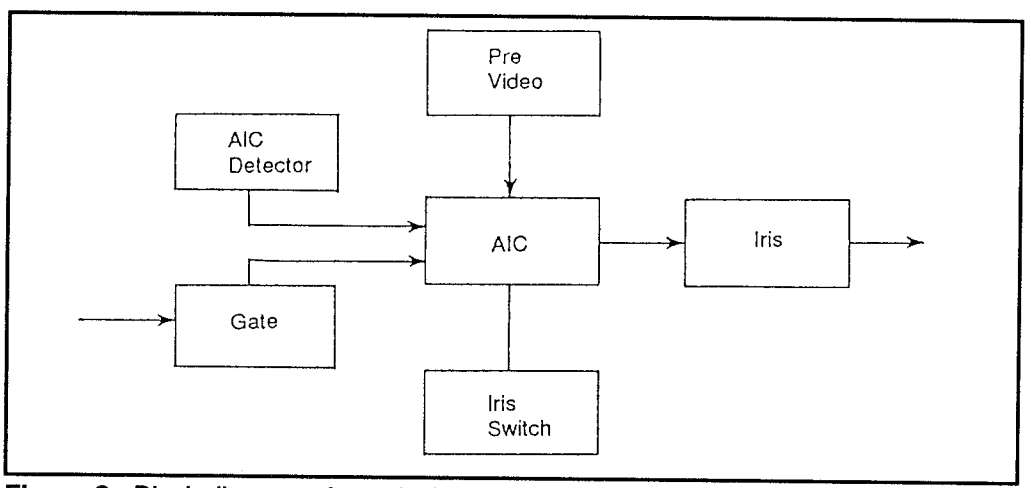

Figure 3: Block diagram of a typical auto iris circuit (AIC)

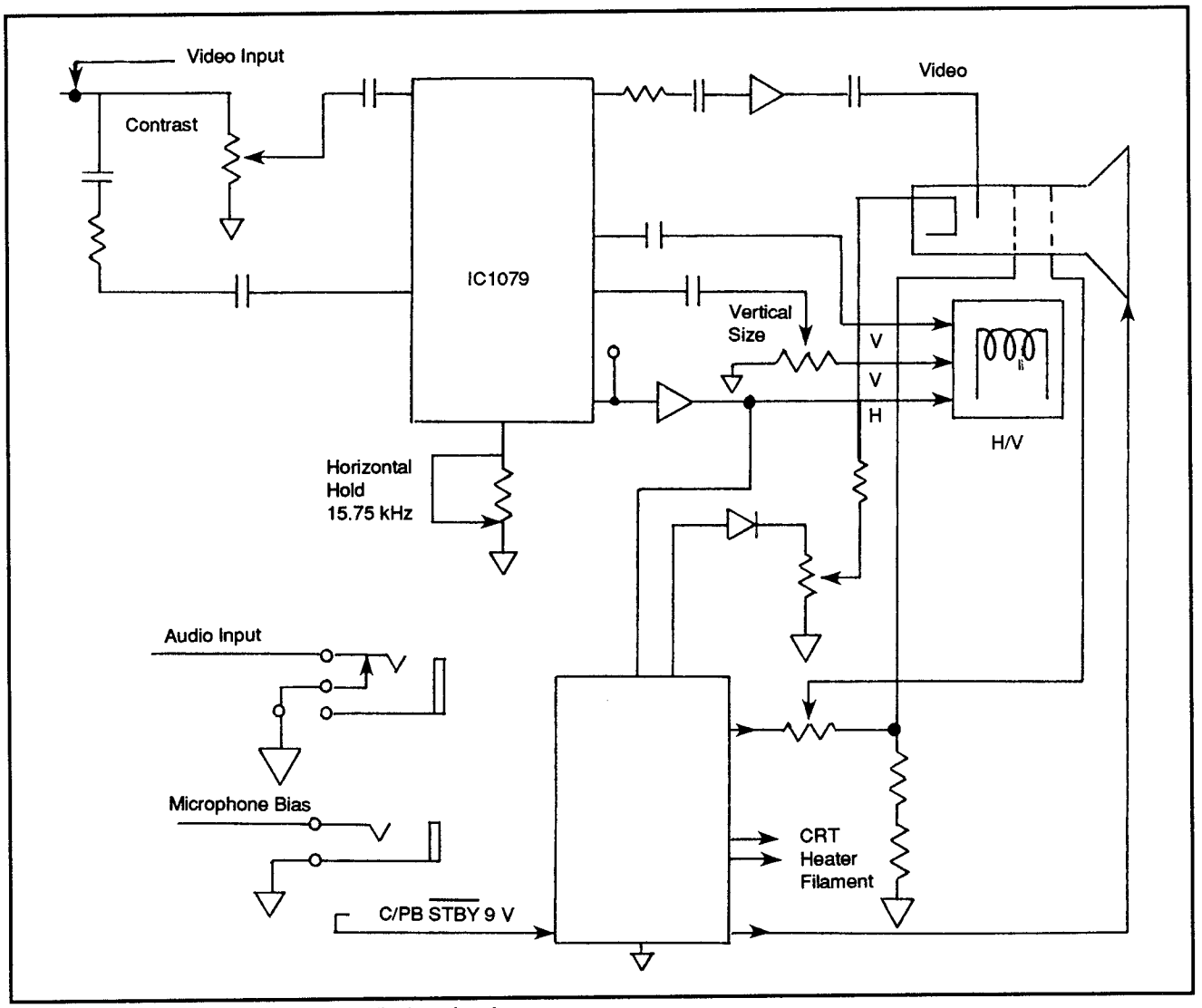

Figure 4: Typical electronic viewfinder circuits

Electronic Viewfinder Circuits

Figure 4 shows a typical viewfinder circuit (EVF). The EVF is like a small black-and-white video monitor that displays images from the camera and the VCR of a camcorder. The EVF also is used for on-screen displays like time/date and status of the VCR's operation.

User controls available on the EVF can adjust brightness, contrast and focus. On the circuit board you can adjust the horizontal and vertical controls.

Most of the controls for the EVF are controlled by a single IC. Any adjustments

to this IC other than input adjustments are impossible. Replacement of the entire circuit board is the best way for repairing the EVF.

The EVF adjustments include the horizontal hold, picture tilt, EVF centering magnets, vertical size, focus, contrast and brightness.

To align the EVF horizontal hold, connect a frequency counter to the horizontal output of the main IC. Connect a 47 µF 16 V electrolytic capacitor between ground and the video input line.

Adjust the horizontal hold control for 15.75 ±0.1 kHz. Disconnect the capacitor from the video line.

Figure 5 shows the holding screw for the deflection coil and the EVF centering magnets. Focus the camera on an alignment chart like the cross hatch chart. Both the chart and the camera should be level. Loosen the deflection coil holding

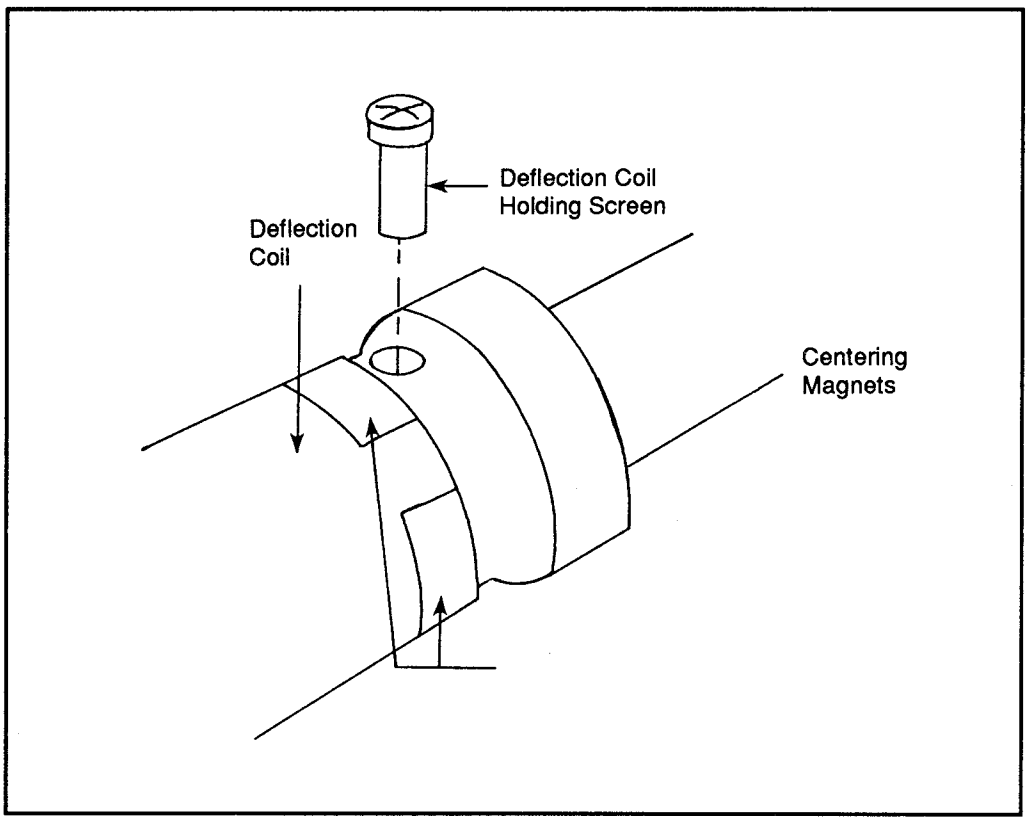

Figure 5: Deflection coil holding screw

screw. Turn the deflection coil until the image is straight. Tighten the screw.

The EVF centering magnets align the position of the image being viewed on the EVF display screen. Fill the screen with the test chart. Adjust the centering magnets until the center of the picture is in the center of the EVF.

To set the vertical size adjustment, focus the camera on a circle. Adjust the vertical deflection size until the circle is round. To set the EVF focus, aim the camera at a resolution chart or siemens star chart. Adjust the focus control for best focus on the EVF screen. To set the EVF contrast and brightness controls, aim the camera at a gray scale chart. Adjust the brightness control and the contrast control so the gray scale on the EVF closely matches the actual gray scale.

5/Cam - TR - VP
Video Processing

5/Cam - TR - VP - R
Recording

Lens Assembly

Within the lens assembly is the focus ring, zoom ring, iris, and exit or lens back block. The lens on a camcorder is typically a 6-to-1 zoom lens with a macro function. The zoom control can be manual or motorized. When the zoom control is operated, a lens moves inside the lens housing away from, or closer to, the primary focusing lens. This changes the magnification of the lens and allows for zoom and telephoto operation. The lens assembly when damaged must be replaced as a whole if damaged.

Creating the Picture

Light passes through the lens assembly and focuses on the pick-up element (either tube or chip). Home camcorders use a single pick-up element. Professional equipment will use two or three pick-ups. Either way, the pick-up creates the primary colors for a color picture. The incoming light is divided into the primary colors by means of a stripe filter between the lens and the pick-up element. Figure 1 shows the composition of a typical stripe filter.

When an incoming signal passes the diamond section of the filter, all light is allowed to pass (R+G+B = Y). When the light crosses the yellow stripe, red and green signals are created, but not blue. When the light crosses a cyan stripe, blue and green signals are processed, but not red. When the light passes an area where the yellow and cyan stripes cross, the yellow stripe blocks blue and the cyan stripe blocks red, allowing only green to pass. The levels for R and B are varied. The time needed for horizontal scanning produces a 90° delay in the phase of succeeding lines. The output from later lines is phased with those of earlier lines by using delay and phase-shifting circuitries.

These lines are shown as N, N+1, and N+2 in Figure 1. The N line contains varied red and blue signals and a constant green signal. By subtracting R for the B + R signals, only the B component passes. Subtracting the R signal leaves a B signal only. The green level is constant and the red and blue signals are varied. This allows the luminance signal Y to be combined with the R and B outputs. The output for NTSC (National Television Systems Committee) color is then R - Y and B - Y. As the target screen of the pick-up device is scanned, different output signals are created. The filter allows only certain colors to pass.

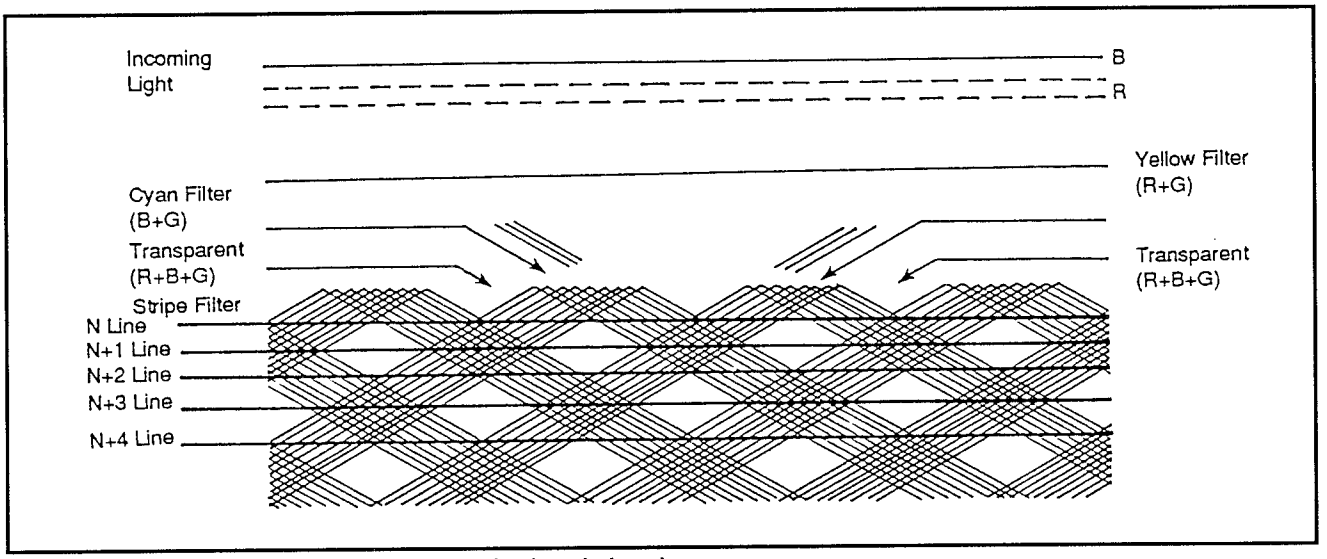

Figure 1: Stripe filter characteristics and related signals

5/Cam - TR - VP
Video Processing

5/Cam - TR - VP - SC
Sensor Circuits

Trouble Sensors

If the camcorder will not go into any of the modes (play, record), check the sensor circuits for all correct signals. If either the forward end or rewind end pins of the function sensor IC are high, the tape may be at the end or beginning and cannot advance in that direction. If the tape is inserted and is ejected or stops without loading, the signal pulse at the reel lock pin may be incorrect.

Reel Sensors

The reel sensor is made from an LED, photo sensor and a reflective disc with eight reflective and nonreflective areas located on the underside of the takeup reel. As the reel rotates, the LED output is reflected/absorbed by the rotating disc which produces a signal by the photo sensor. Voltage pulses are generated by this as on/off signals via reflected/absorbed light and sent to the sensor IC. If the reel stops rotating, the pulses are removed, and the IC sends the stop signal. The pulses are used to feed the tape counter.

Cassette Switch

The cassette-up switch will be hooked to the function sensor IC circuit to detect when a cassette is loaded or if the unit is empty. When the cassette door is open, the cassette switch is open and the function sensor IC senses this.

Record Tab

If a record tab has been punched on a video cassette, the safety tab switch will not be activated. This produces a low at the safety tab pin of the function sensor IC and will not allow the camcorder to enter the record modes.

Mode Sensor Switch

The Mode Sensor Switch checks that the various functions are working properly. It checks to see if the VCR is executing the selection function. It can also tell the camcorder a tape has been unloaded and stop the camcorder.

The mode indicator drive signals from the sensor circuits are applied to various character displays to indicate what mode is being operated. For example, if the current mode being operated is rewind, the mode signal will be applied to the proper transistor, which sends the signal to the proper display. (On older camcorders, on-screen displays may not be used, but a series of LEDs may indicate mode selections. Here we are talking about EVF displays only.)

If the display is not indicating (REW appears in the EVF) make sure the function is being executed (rewind, play, etc.). If the function is working, the problem may be that the display alignment is off. If the alignment is correct, then the mode indicator circuits are bad.

Cylinder Lock Detection

The cylinder lock signal is the 30 Hz signal used by the cylinder servo. This signal detects the pulse width and if this value is less than a particular value, it indicates that the cylinder motor has slowed down or stopped. If this occurs, the sensor circuit will put the camcorder in the stop mode.

Dew Sensor

The dew sensor detects the presence of moisture in the VCR section of the camcorder. As moisture builds up on the sensor element, a signal is increased and sent to the trouble sensor IC. When a high enough level is reached, the sensor circuit will place the VCR in standby and display the word DEW in the EVF.

5/Cam - TR - VP
Video Processing

5/Cam - TR - VP - SPC
Signal Processing Circuits

The signal processing circuit (VHS camcorder) may consist of the CCD image pick-up devices, preamplifier, resampling, and chrominance and luminance circuits.

Luminance Processing

Figure 1 shows a typical luminance signal processing circuit. The luminance circuits are designed to separate the luminance signals and form the composite video signal.

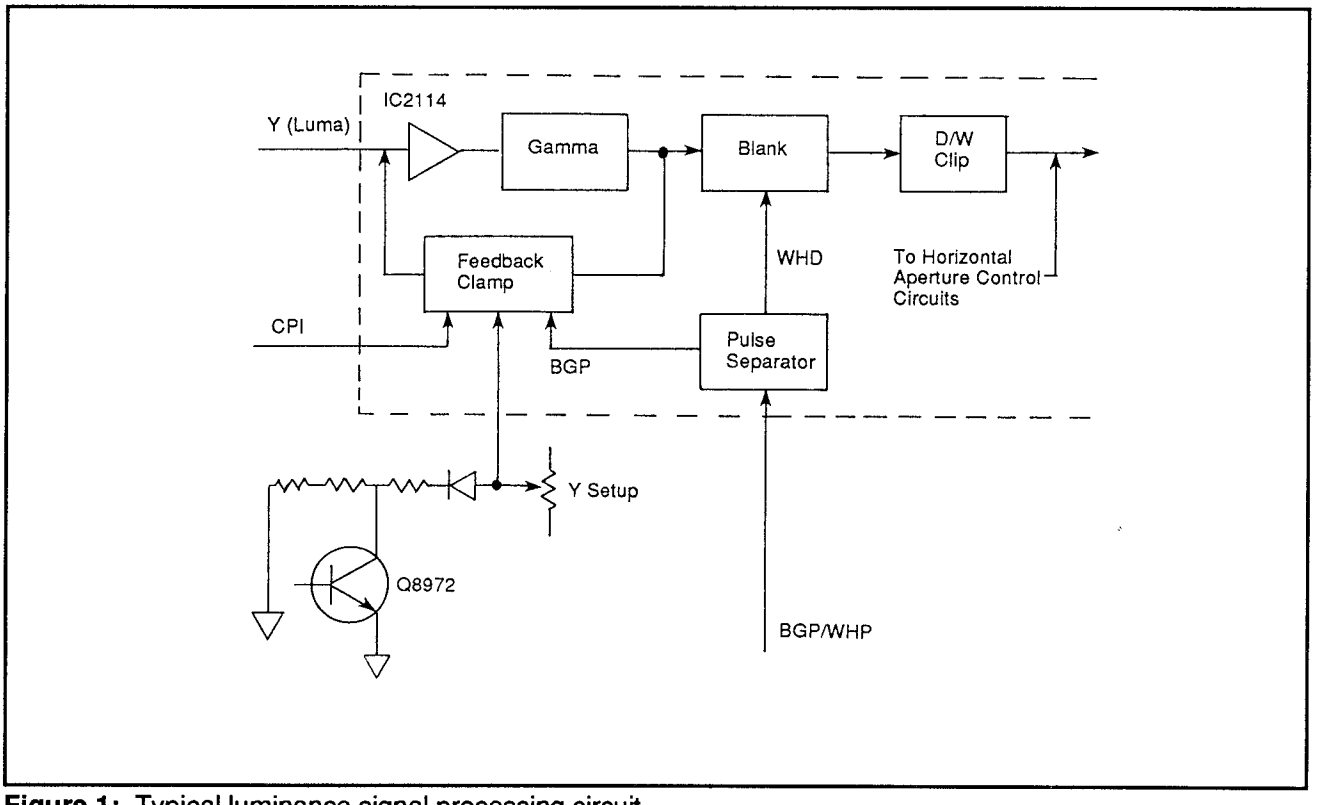

Figure 1: Typical luminance signal processing circuit

The luminance circuit consists of a shading correction, setup, feedback clamp, blanking, linear clip, AGC, AGC detector, gamma control circuits, gamma correction, and a blanking and linear clip section. These circuits produce the luma (Y-signal) in the AIC/AGC circuits and apply the processed signal to the chroma encoder.

The Y-signal is branched into two paths from the dark/white clip circuit. One path is sent to the aperture amplifier and the other is delayed (150 ns) and then applied to the aperture amplifier. The output is a resultant signal that is the low-frequency luminance signal.

Chroma Processing

The chrominance signal-processing circuits receive R and B inputs and a low frequency luminance (YL) input. The circuit generates two color difference signals, -R-YL and -B-YL. These signals are then applied to the automatic white-balance circuits and the chroma encoder. The chroma signal processor circuit also creates a clipped -R-YL signal that is applied to the horizontal aperture correction circuit.

5/Cam - TR - VP
Video Processing

5/Cam - TR - VP - TCC
Tape Counter Circuits

Location

Figure 1 shows a typical tape counter section. The tape counter section is located in a single module. The power is derived from a 3 V to 5 V source.

The pulses used to advance the tape counter are received from the sensor section. The output is an on-screen display in the viewfinder.

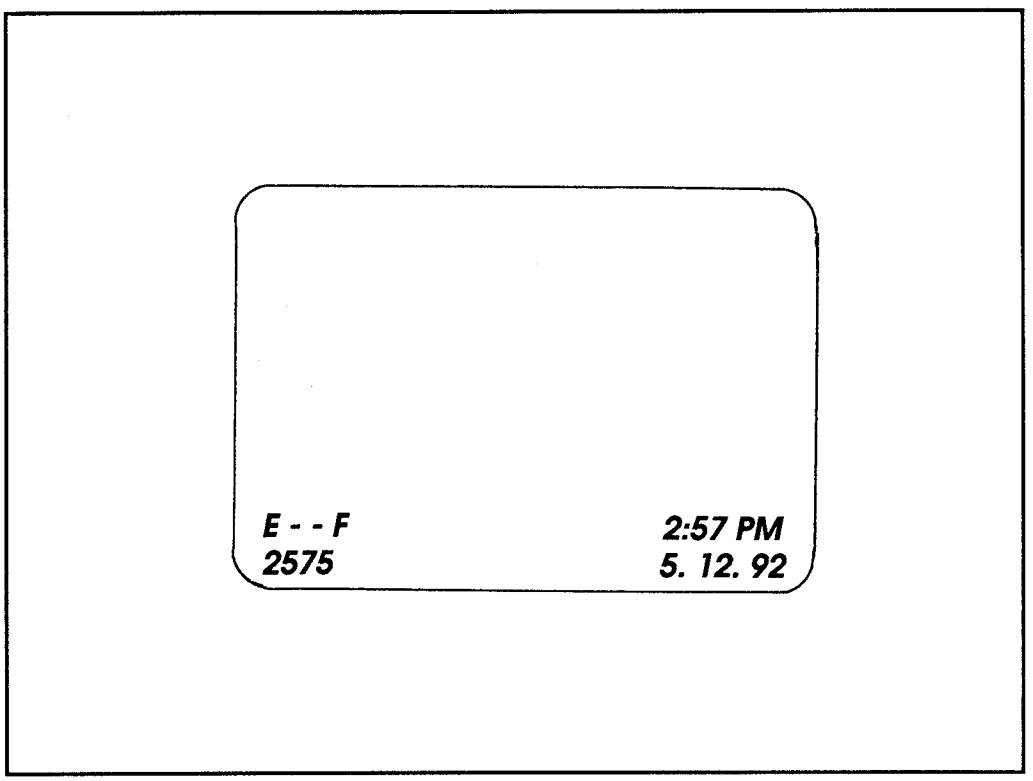

Figure 1: Typical on-screen tape counter display

Truth Table

Camcorder Mode	Counter Input 1	Counter Input 2	VCR Mode
Stop	1	1	Stop
Play/FF	1	0	Count up
Rewind	0	0	Count down

Figure 2: Truth table for display

Capacitance

When power is first applied, the display memory is erased and the display shows 0000 (assuming the display mode has been selected).

There is a coupled capacitance to keep the counter settings during a momentary loss of power or when the unit has been turned off. In some units the capacitance can keep the circuit active for about 3 hours.

Memory

If the save function has been activated (by power applied from the sensor section) memory contents can be saved for several days or until the power is removed from the camcorder.

The display section also receives two control pulses at the control inputs from the sensor control section. These inputs control the mode of operation (count up, count down, play, memory, etc.) as shown in Figure 2.

If the Memory button is pushed, an M appears on the display and it can be reset to 0000 during a rewind or fast-forward function.

Controls

The display section generates a low when the counter reaches 0000. This low will then be returned to the sensor section which then puts the VCR in the stop mode.

The Reset button clears the display (in the same manner as when the unit is first powered up) by sending a pulse to the clear input of the display control section.

If problems arise in the tape counter display, check to see that all signals are reaching the display control section (including the power input).

If all the inputs are correct, but the display is absent, the control IC is not functioning correctly or the character alignment is set wrong and needs adjusting. This would put the characters somewhere off screen.

Alignment of the character positions is described in *"5/Cam - TR - EA Electrical Adjustments"*.

If the display is present (and all inputs are correct) but the counter does not advance/decrease during any of the movement modes, the display control IC could be bad.

When any one of the input lines is absent or abnormal, trace the signal back to its source.

5/Cam
Camcorder

5/Cam - TR	Troubleshooting and Repair
5/Cam - TR - VP	Video Processing
5/Cam - TR - VP - TCC	Tape Counter Circuits

5/Cam - VCS
Various Case Studies

5/Cam - VCS - Sha-VL-L285U
Sharp VL-L285U

Introduction

This camcorder has all the standard features and a few more. One nice feature is the color viewfinder. Most camcorders use a black & white viewfinder, which shows the user what is being recorded and gives an indication of contrast. However, a black and white viewfinder does not help when adjusting the color manually, nor does it give accurate information about color shifting in low or unusual lighting situations.

Another nice feature rarely found in camcorders is a built-in self timer. This allows the user to set up the camcorder and step into the picture. The camera will activate automatically.

Using the camcorder and performing routine maintenance are the same as with any camcorder. Generally, access to the interior is difficult. Because of this, most users and many technicians will give only a cursory cleaning and almost no other maintenance.

This Sharp camcorder offers much easier access to the interior than most camcorders. The cassette door is held in place by two screws. A light tug upwards and out will remove the door and provide access to the interior.

Overview

The Sharp VL-L285U is a full-sized camcorder that accepts standard VHS cassettes. The overall dimensions are 5 13/16" x 9 5/16" x 16 3/8", with a weight of 6.2 pounds (plus another 1.6 pounds for the battery pack).

It has a 1/2" CCD pickup capable of 270,000 pixels and is sensitive to 2 lux. The viewfinder is a 1" color LCD with an adjustable lens to change the diopter setting (for using the camera without glasses).

The lens is F1.6 with a 12X power zoom. The filter size is 55 mm. An electronic shutter can be selected to provide shutter speeds of 1/500, 1/1000 or 1/2000. When the amount of light is sufficient, this feature can be used to "freeze" a moving subject.

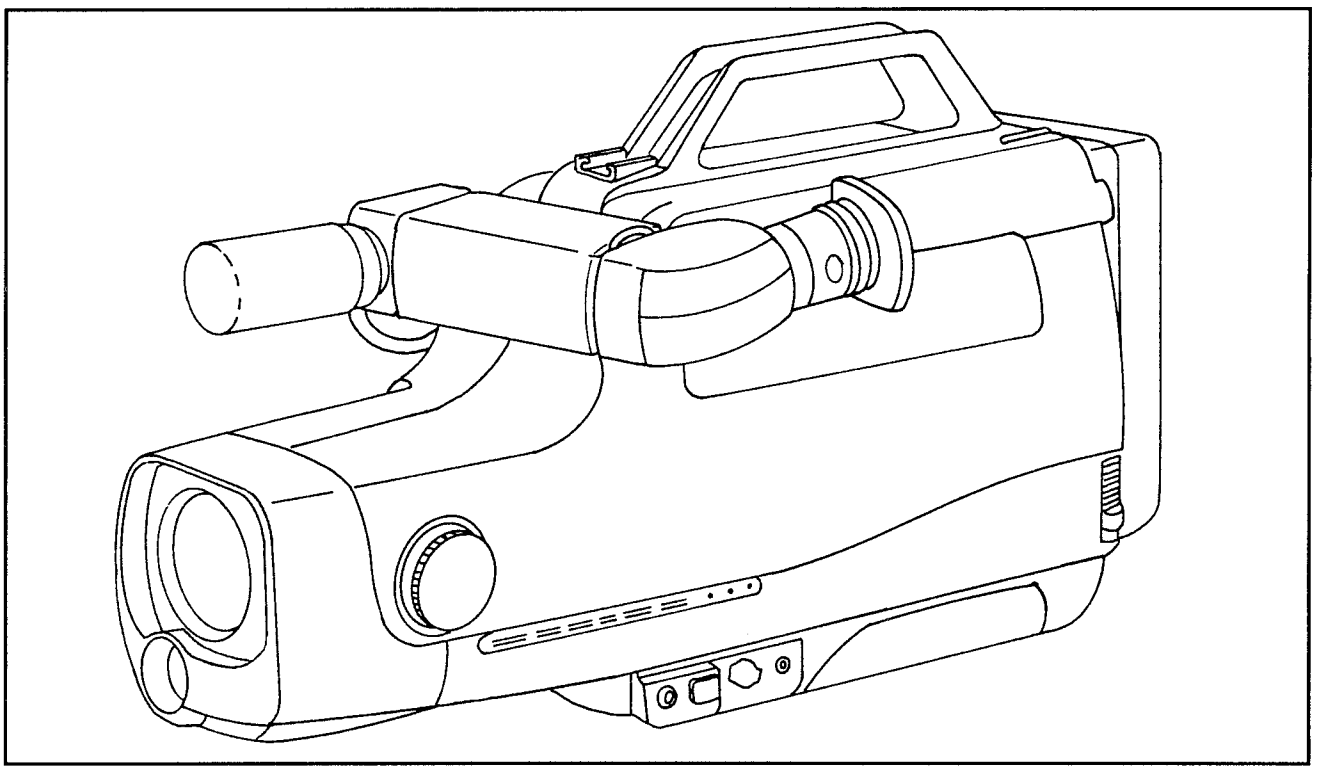

Figure 1: The Sharp VL-L285U

Microphone

The microphone that comes with the unit is an omnidirectional electret condenser type with a 3.3 mm plug. The unit has a microphone input of -62.8 dBs into 18 kW.

Video output is a composite signal at 1.0 V peak-to-peak into 75 W. The audio output is -8 dBs at 308 mV into less than 600 W.

Playback/Record

Playback and record are both SP (standard play), giving 2 hours of recording or playback with the standard T-120 cassette, and 160 minutes with the T-160 cassettes. It should be noted that the longer play cassettes are made with a thinner base and may cause trouble. This becomes more of a problem if the tape is used in a poorly maintained VCR or camcorder. If you use the longer tapes, it's critical that you keep the unit clean.

Flying Erase Head

Playback/recording is enhanced by the use of a flying erase head. Because the erase head is mounted on the video drum assembly and turns with the record heads, the number and severity of glitches is greatly reduced.

The unit uses 12 VDC and consumes 12 W of power in operation. Power can be supplied through an AC adaptor/charger, an onboard nicad battery pack (BT-22) or from the 12 VDC supply of an automobile (with the optional adaptor cable). The AC adaptor/charger (UADP-0104GEZZ) accepts an input voltage of between 100-240 VDC and outputs at 13 VDC and 1.2 A. The adaptor/charger consumes up to 30 W of power.

Warning!

If extensive disassembly and/or repairs have been done, it's important to be sure that the unit is safe before putting it back into service. Thoroughly examine all work done. Be especially careful of any wiring, and particularly wires that carry AC voltage.

Current Testing

Sharp suggests that you complete the examination by using a VOM or DMM to test for any leakage current greater than about 0.45 VAC rms. This is the equivalent to a leakage current of 0.3 mA rms. A leakage current at this level or greater can present a shock hazard to the user.

Begin by connecting a 10 W 1.5 kW resistor in parallel with a 0.15 µF capacitor.

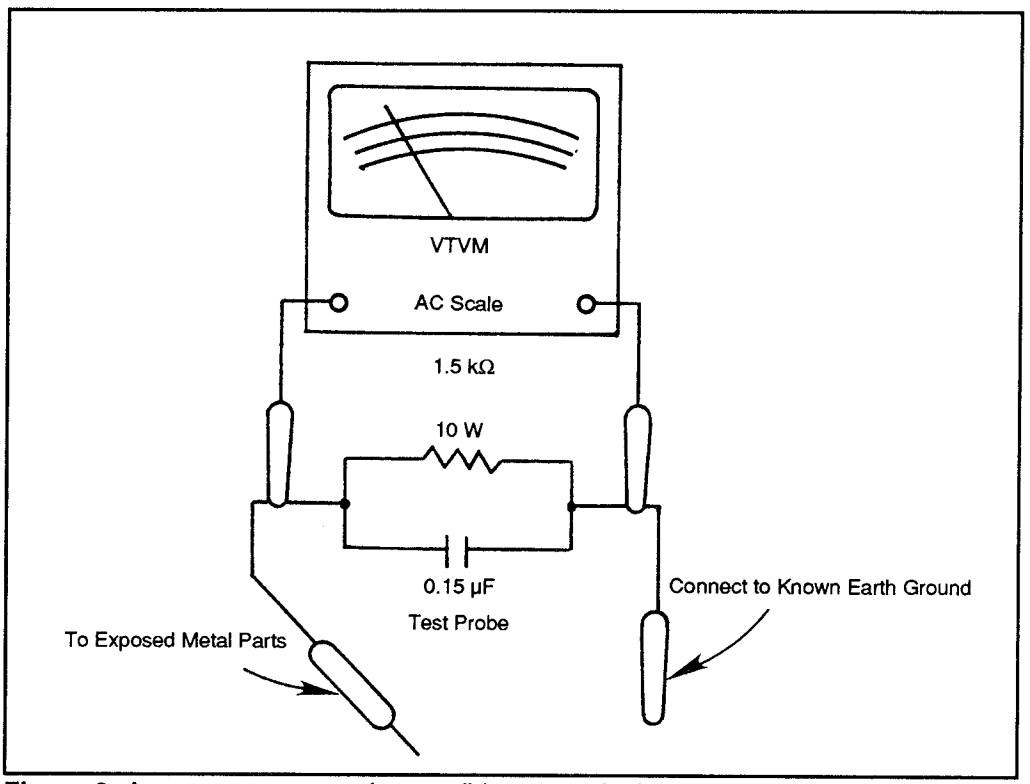

Figure 2: Arrangement to test for possible current leakage

Clip the meter probes to this network. Then clip one side to a known ground. The other side will be used to probe the various conductive points in the camcorder (see Figure 2). This includes any metal parts such as the metal parts of the cabinet, screws, shafts for knobs and other controls.

Voltage Drop

In essence you are testing the voltage drop across the resistor (which is in series with the meter). Attach the AC adaptor to the camera, turn on the power and make the tests. It is best to run through the testing a second time with polarity reversed. That is, use a non-polarized adaptor for the plug so that it can be reversed in the outlet.

General Disassembly

The extent of disassembly depends entirely on the problem and the job at hand. It is suggested that you keep it to a minimum and do no more than is absolutely essential. The main disassembly information is placed here, in one place, to make finding it easier. This does not mean that you should disassemble the entire unit, only what is necessary. Although disassembly and reassembly of this Sharp camcorder is relatively uncomplicated (compared to some other units), there can always be difficulties. Keep in mind at all times during disassembly that you should never force anything.

General disassembly begins with the removal of the viewfinder assembly. To do this, simply unplug the connector and slide the assembly off the shoe.

Removal

Next, remove the cassette door. To do this, first remove the two holding screws. The door comes off by lifting it and pulling outwards. This is an important step since it gives you good access to the interior. (Note: If you are removing the door only to service the interior, it is not necessary to remove the viewfinder assembly.)

To access the lens assembly, remove the two screws—one from the front and one beneath. The front cover is removed by pulling it forward.

Cabinet Removal

You can now remove the cabinet. This will give you access to the rear of the VCR assembly. Remove the three holding screws—one at the top rear and two beneath the camcorder. Flip up the VCR control panel door. Unplug the battery terminal connector (inside at the upper rear) and remove the cabinet.

The control assembly can now be taken off. Remove the holding screw and slide the assembly sideways.

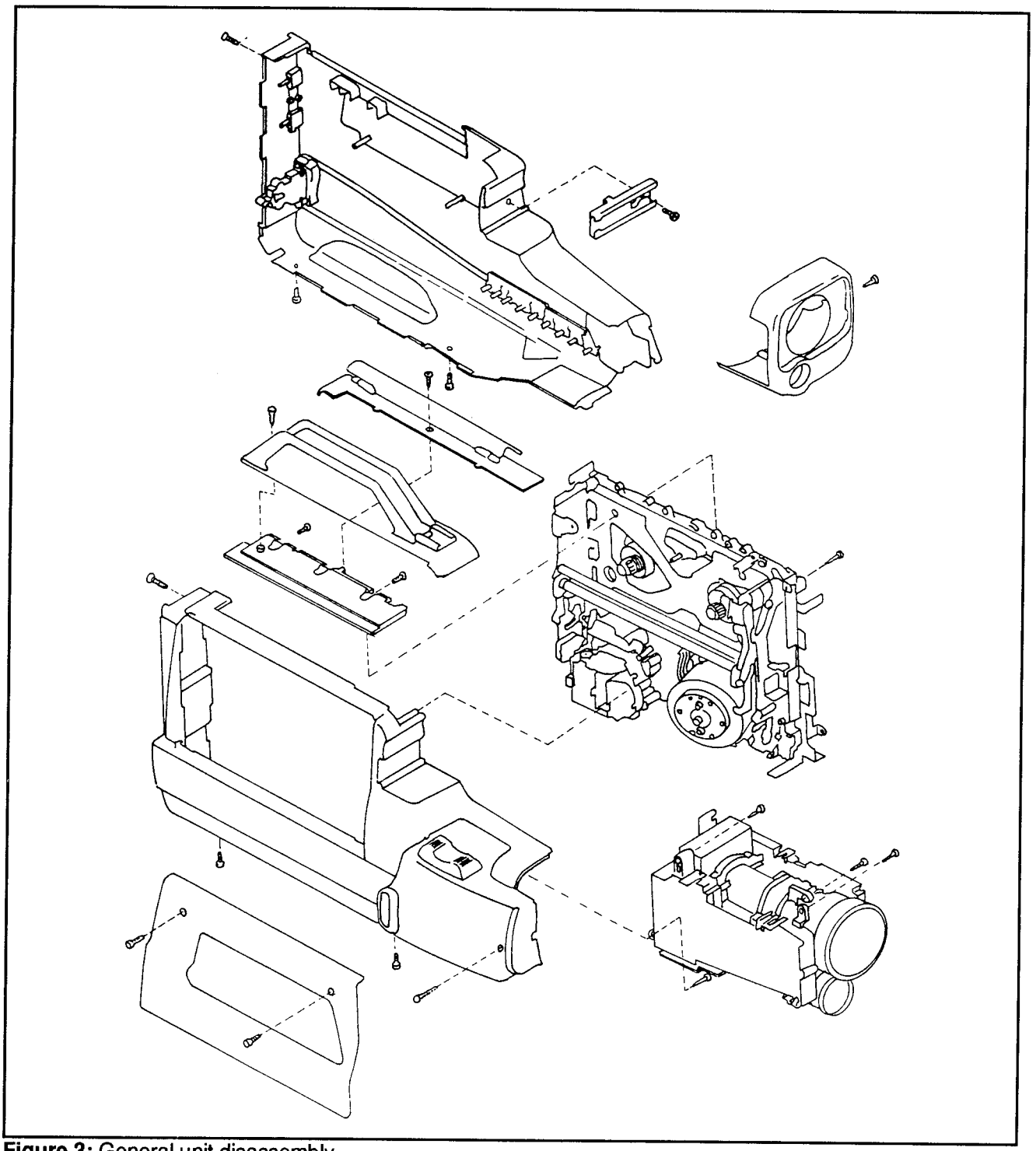

Figure 3: General unit disassembly

The camera unit is held by four screws. Two are at the front top; the other two are at the back—one above and one below. Remove these screws. Carefully disconnect all wires going to the camera unit. These wires tend to be delicate, so proceed cautiously.

VCR Unit

The VCR unit is held in place by four screws. Two come up through the bottom of the unit. Another goes through the cabinet at the top rear. The fourth screw goes through the VCR unit at the front and top. As with the camera unit, very carefully disconnect all wires and connectors. The VCR unit can now be lifted out.

Handle Removal

At this point disassembly is essentially complete. If need be (rare) you can also remove the handle. This is done by removing the screw at the rear of the handle. Then push the handle forward slightly and lift. The cabinet holder is held by two screws passing through the side.

Reassembly is the reverse procedure. Take care that you replace all the wires and connectors correctly. Double check this, and the placement of each screw during each step.

Viewfinder Removal

In most cases, if the viewfinder unit malfunctions it will be replaced as a whole unit. Working inside the unit is difficult and delicate. Some of the parts, most notably the LCD module and the fluorescent viewfinder tube, can be easily damaged.

If disassembly is required, proceed cautiously. Work close to the surface of the workbench. (If something accidentally falls, you want the force of impact to be minimal.) If you intend to work with or around the LCD module, be aware that it is extremely delicate. Even touching it can destroy the module. It has a built-in driver which is highly sensitive to static. There are also four bonded connections on the unit which are delicate enough that even touching them can cause a break.

If you must work with or around this module, take precautions. It's best to ground yourself so as to drain off any static buildup. Touch the module as little as possible. Don't touch the bonded connections or the terminals on the flat cable at all! (Further precautions will be given in this section at the appropriate time. For now this is mostly a warning to avoid working around the LCD module if at all possible.)

Begin by removing the viewfinder unit from the camera. To do this unplug the connector and slide the viewfinder unit off the camera.

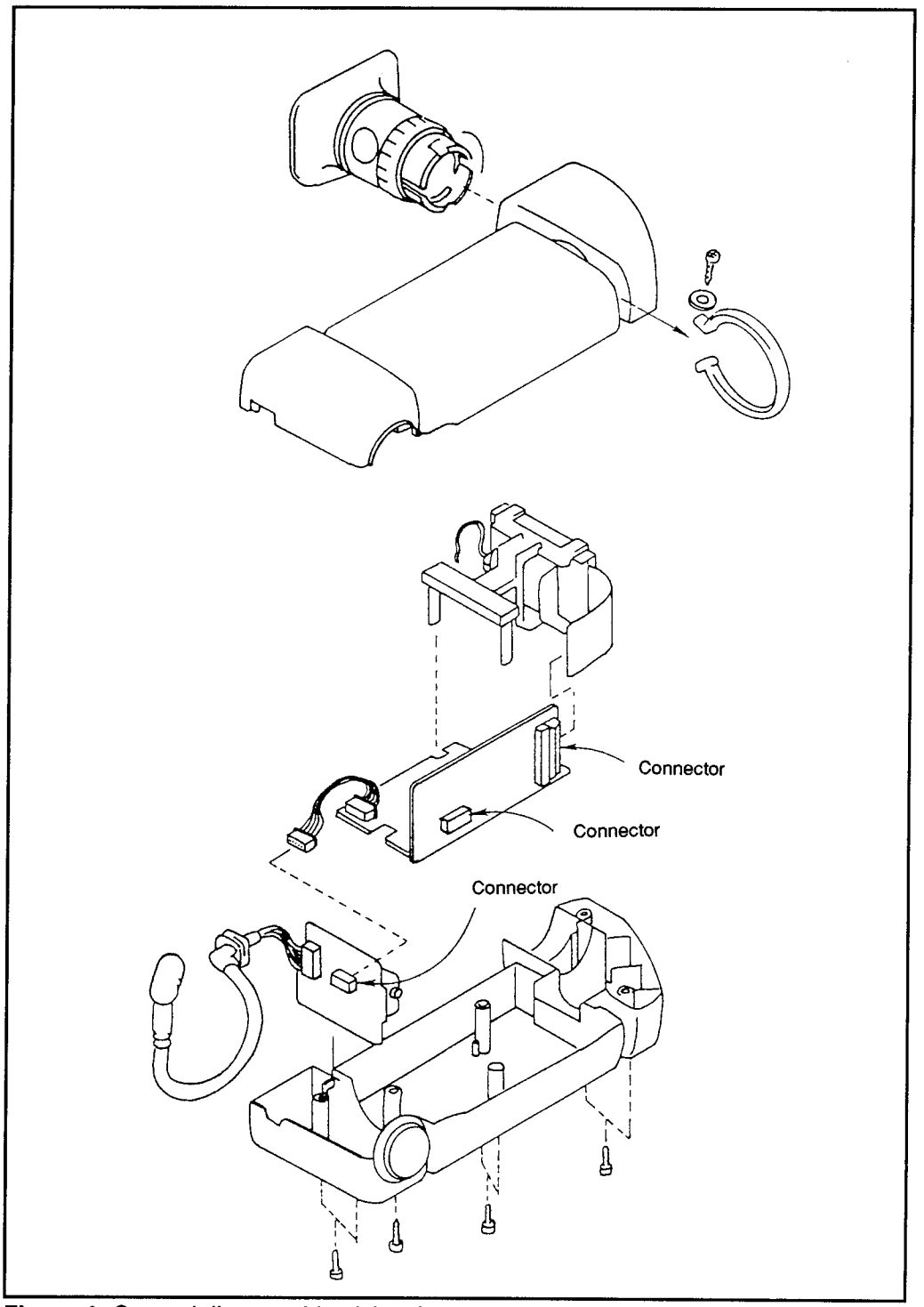

Figure 4: General disassembly of the viewfinder

Eyepiece

The eyepiece detaches by twisting it counterclockwise. Once this is done you can remove the screw from the cabinet holding bracket. (Be careful to not lose the small washer.) Press down on the lower part of the bracket and slide the bracket off the cabinet. When replacing this bracket in reassembly, use a torque screwdriver and tighten the screw to 1.1 ± 0.2 kg/cm.

Housing

The upper and lower parts of the housing are held together with seven screws in the bottom. There are two each at the rear, middle and front, with a single screw near the front. Carefully separate the two halves. Do not force a separation. And, when pulling the two halves apart do so close to a working surface.)

Main Lower Board

The main lower board assembly is held in place by a hook. Unplug the connector from this section to the section at the front of the assembly. Carefully unhook the assembly and lift it (GENTLY!) from the cabinet.

The front section is held in place by a single screw that passes through the section and into the cabinet. Remove this screw. Carefully pull upward in an arc at the outer top edge. The section should lift out easily.

The LCD module assembly can be separated from the main PWB, but this should be done only if absolutely essential. Once again it is critical that you proceed cautiously! It's too easy to damage the module, even while it is still in its holder. If you absolutely must touch the module, be sure to ground yourself to eliminate any static charge. Touch the module as little as possible, and then only by the top and bottom edges. DO NOT touch the bonded connectors or the flat cable terminals.

Disconnect the flat cable from the main PWB. Unsolder the lead of the backlight fluorescent tube. Great care is needed. Both heat and pressure can cause the glass of the fluorescent tube to crack. The best you can expect if this happens will be degraded performance. Carefully push the two holding clips sideways and lift out the LCD module, holding it by the upper and lower edges.

In reassembly be sure to carefully align the flat cable between the marks on the holder cover.

Deflection Plates

The deflection plates shown in Figure 6 have protective covers on them. If you need to peel these back, be very careful that they do not touch the terminal leads on the flat cable.

The plates are easily scratched. Cleaning them should be avoided. If absolutely

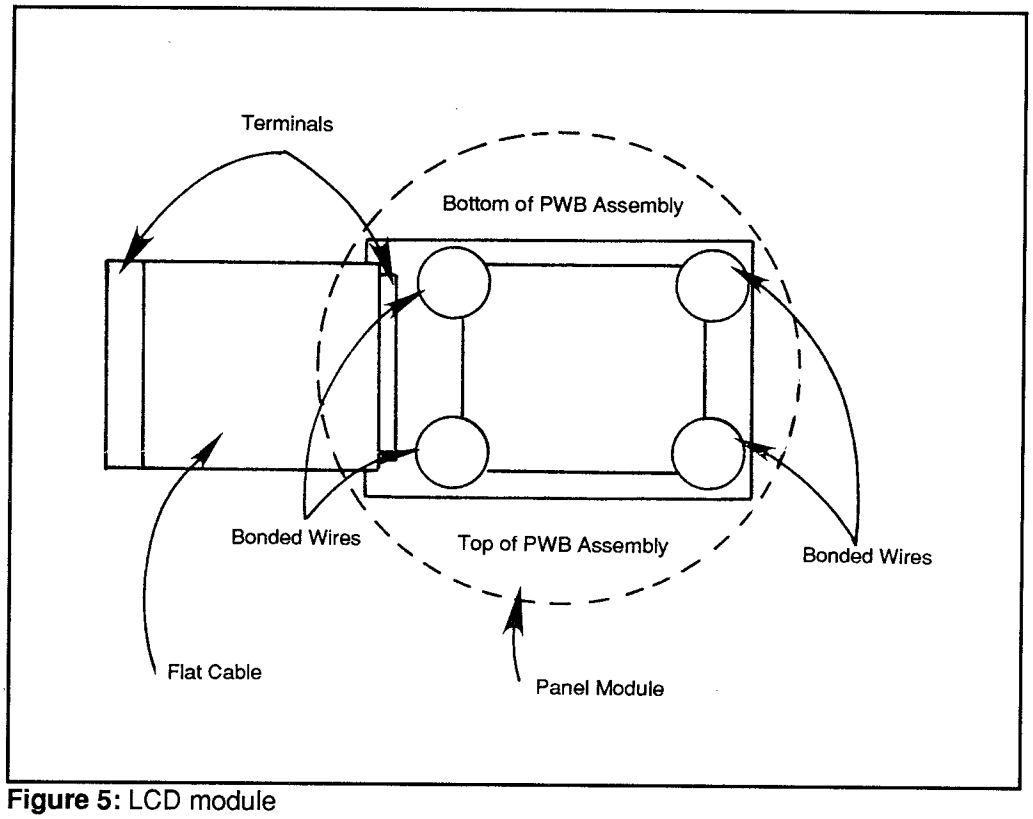

Figure 5: LCD module

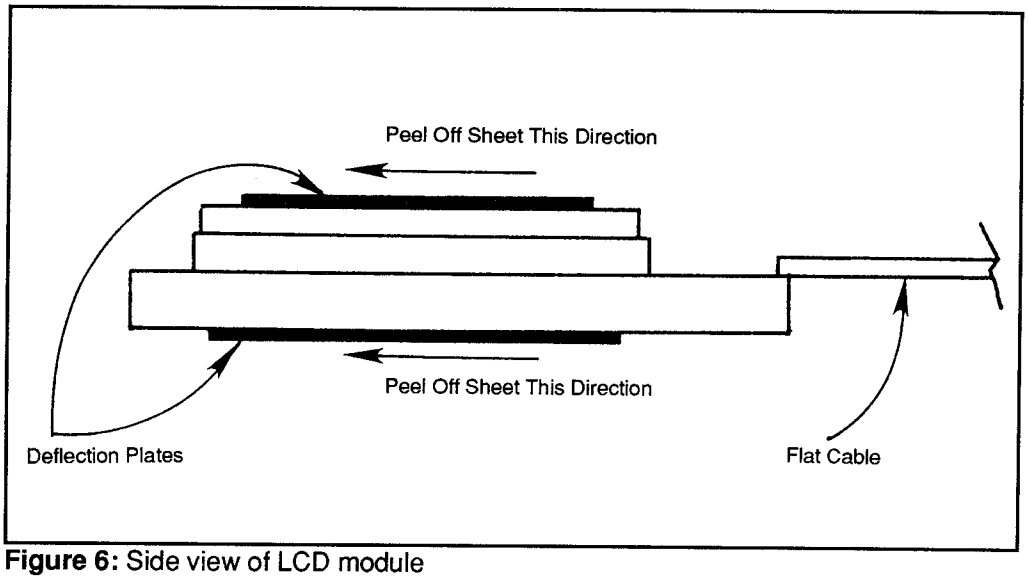

Figure 6: Side view of LCD module

necessary, first try cleaning the plates by blowing them with clean, dry air (such as from a can of compressed air). In serious cases, the plates can be cleaned (GENTLY!) with a swab moistened with pure, technical grade ethyl alcohol. It should be noted, however, that if the deflection plates are dirty enough to require this kind of cleaning, the camera is probably being used under adverse conditions. Other problems in the camcorder can be expected. (The heads on the video head assembly, for example, and the various mechanisms, are much more exposed to environmental conditions than the deflection plates.)

Video Drum Replacement

The video head assembly drum is fitted to an extremely tight tolerance. Replacement of the drum should be considered as a last resort and approached with the utmost attention to detail. Small amounts of dust or even scratches on the parts can make proper alignment impossible.

Take precautions so that your fingers never touch the surface of the drum. It is suggested that you use lint-free cotton gloves, such as those found in photographic stores for handling negatives, whenever handling the drum.

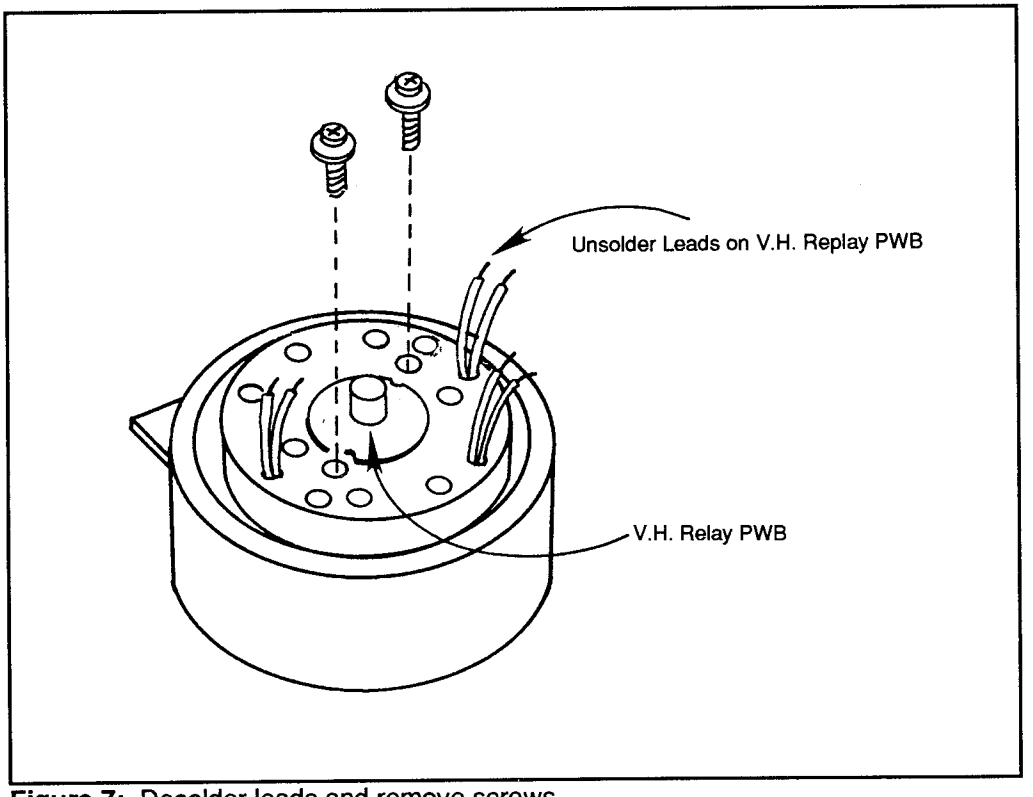

Figure 7: Desolder leads and remove screws

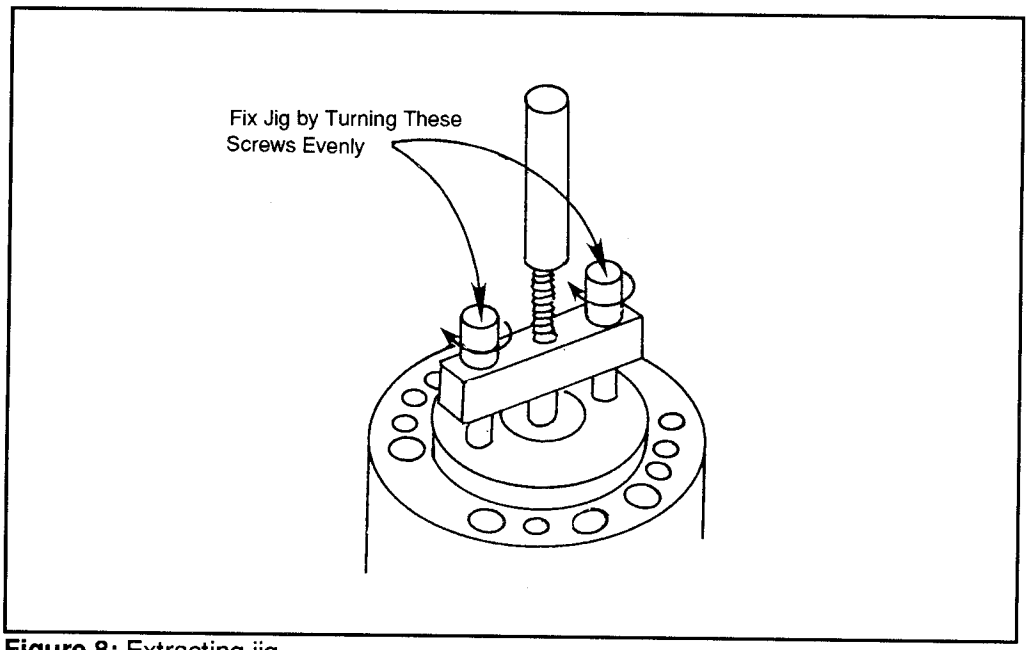

Figure 8: Extracting jig

To remove the old drum, begin by desoldering the leads. Also remove the two screws located near the center of the drum.

Extracting Jig

An extracting jig is needed to separate the drum parts. It's critical that the jig be fitted so that the screws are perfectly even. Turn them simultaneously and at the same rate until the jig is fixed into place. Failure to do so can cause the extraction driver to pull the drum at an angle.

When installing the new drum all the precautions become even more critical. The new drum must never be touched with your fingers and must go on evenly. Turn the screws at the same rate to fix the jig. Take your time and be sure that the new drum goes on evenly and smoothly. Resolder the connections and install the two screws.

With the new drum in place, go through all the steps given above concerning mechanical adjustments, paying special attention to checking the tape travel path.

Camera Adjustment

To make camera adjustments you need some special extension cords. These are listed in the following table. You also need JIGSTAND L170. This hooks to a tripod, with the lens attaching to the jig by a groove.

Extension Cords

Cord	For
QCNW-0992TAZZ	PA ↔ AN
QCNW-0993TAZZ	SA ↔ AM
QCNW-0994TAZZ	PB ↔ AP
QCNW-0997TAZZ	PG ↔ SD
QCNW-0996TAZZ	PD ↔ SD

Disassembly is rarely needed for most of the tests and adjustments given in this section. It should be done only if you have a reason to get inside the camera. Before you remove the camera from the camcorder, try to be sure first that the problem is in the camera and requires its removal.

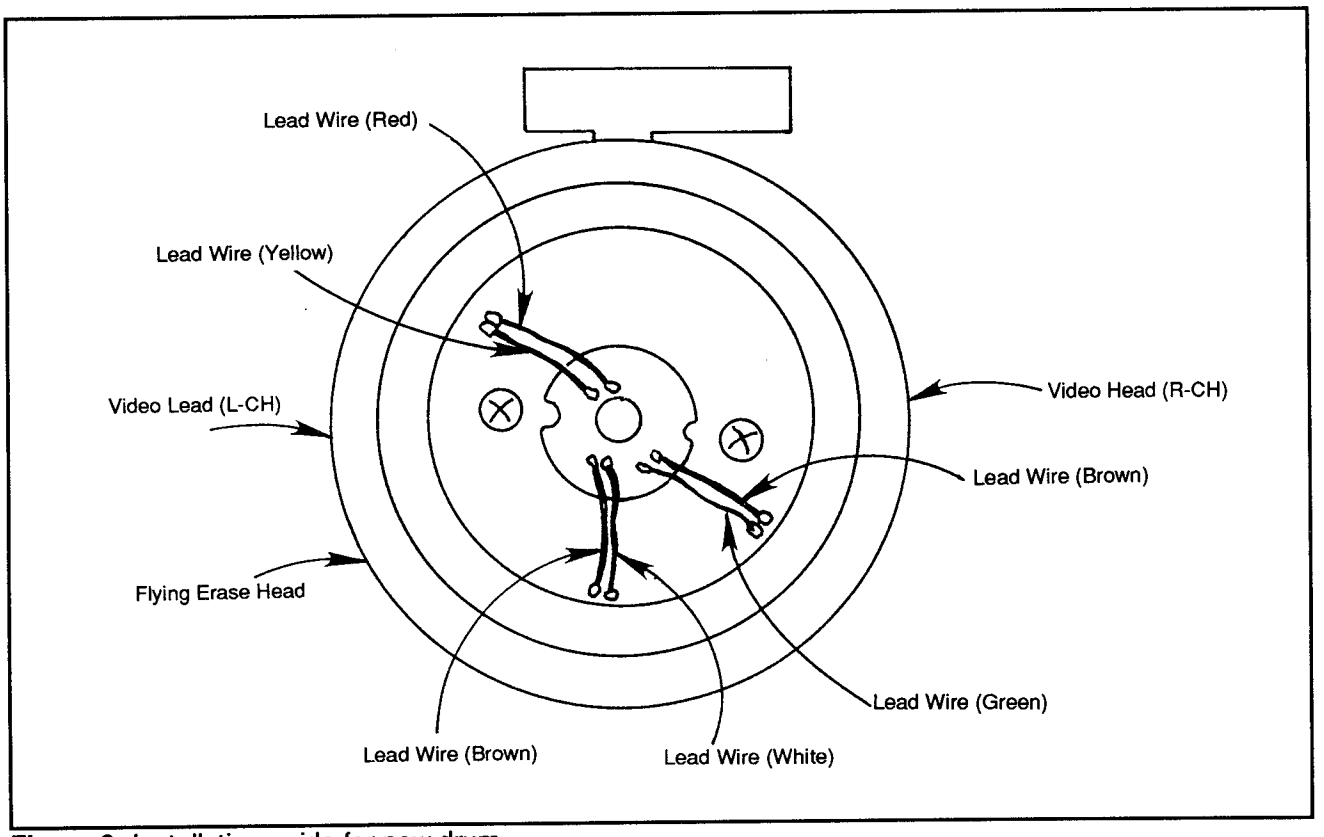

Figure 9: Installation guide for new drum

CCD Sensor

Care must be taken when performing any disassembly of the camera, particularly if you are working with or around the CCD sensor. This device is highly sensitive to static electricity. It's important that you wear a wrist strap to drain off any possible static charge in your body. Sharp suggests using a 1 MΩ resistor between yourself and ground. Also, any soldering iron used MUST be of the grounded type with anti-static protection. Finally, when the CCD is out of its PWB, the CCD should have its pins inserted into a conductive pad or sponge. This causes the pins to short and helps to protect the device.

The CCD may also be damaged physically. It is extremely sensitive. Put on the wrist strap to ground yourself. If you must desolder the CCD, use ONLY a grounded soldering tool that also has anti-static protection, and even then use as little heat as possible. Once you've unsoldered the CCD, remove it from the board, and immediately place it in the conductive pad.

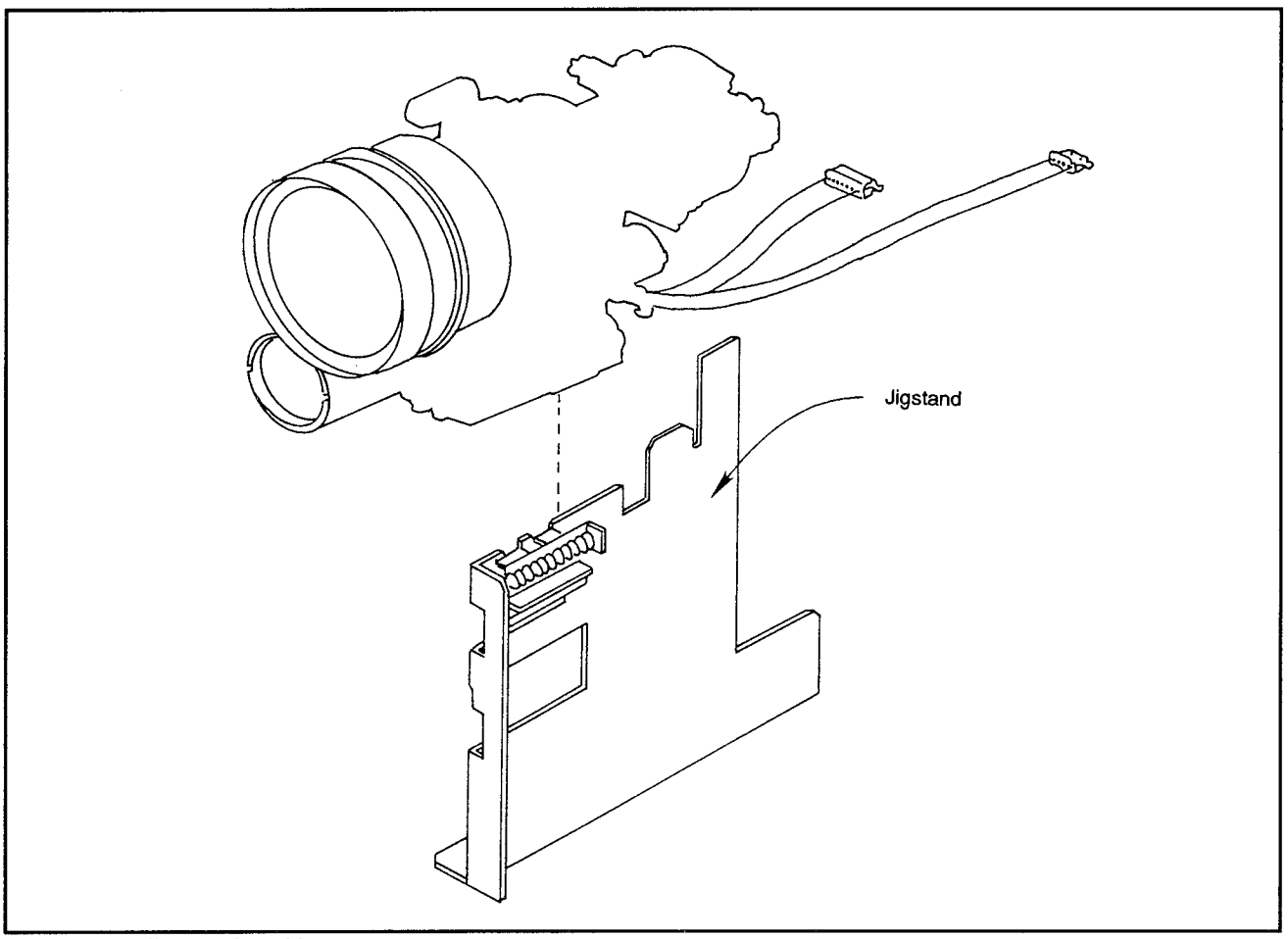

Figure 10: Jigstand and lens

The surface of the CCD is easily scratched. Even something as simple as a fingerprint can seriously degrade operation. If the surface must be cleaned, use silicon paper or chamois designed for use on fine optics. Set up the camera as shown in Figure 11. To make the tests you will need the tools and test equipment listed below.

Tools and Test Equipment

Gray scale
Color bar pattern chart
White pattern
Siemens star
Color temperature conversion filter (Hoya LB165 or Fuji MG-5)
Frequency counter
Oscilloscope
DMM
Vectorscope
Illuminometer
Color video monitor
Two halogen lights
Extension cables
AV output cable
12 VDC power supply
Lens tracking driver

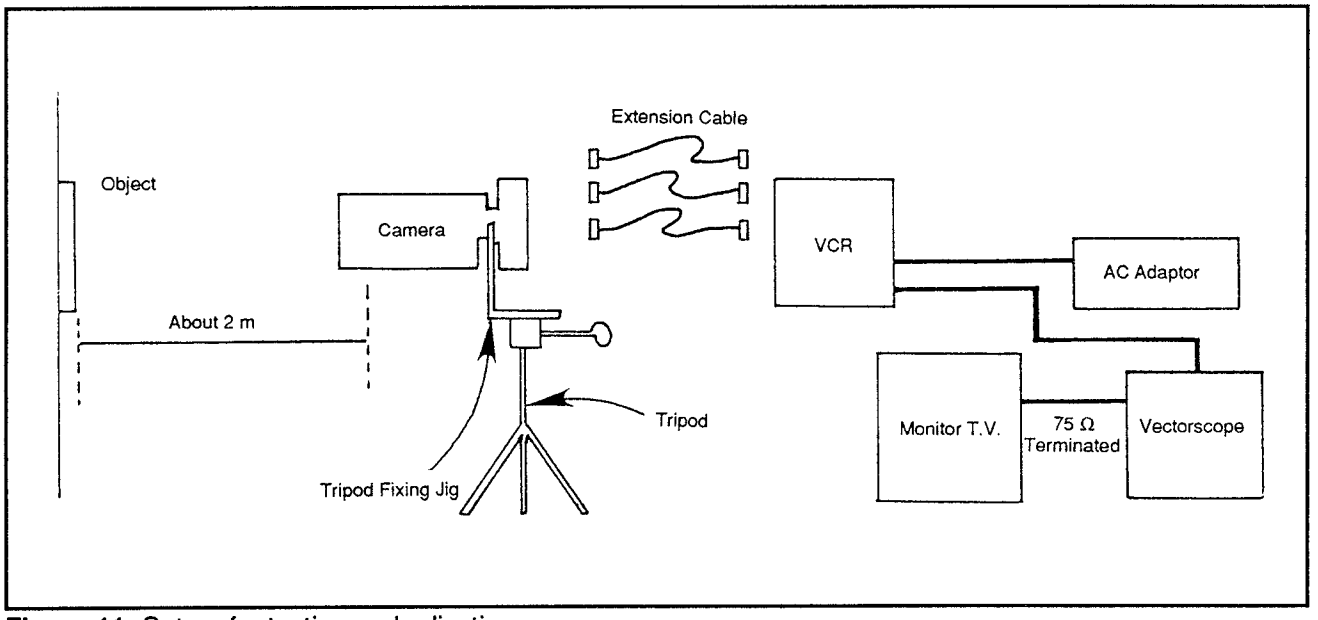

Figure 11: Set up for testing and adjusting

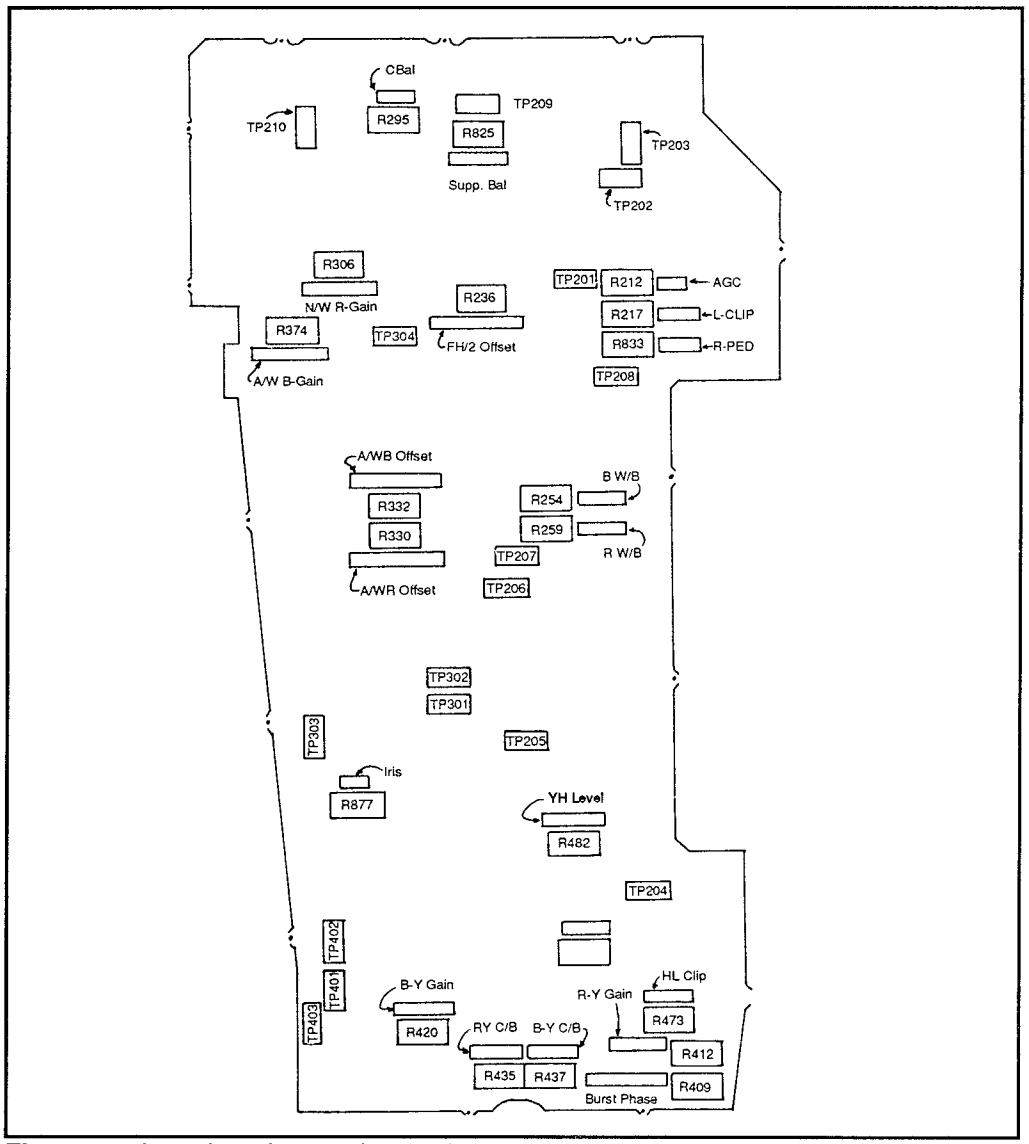

Figure 12: Location of test points and controls on encorder board

To set up, aim both lights so that the pattern is evenly lighted to a brightness of about 3000 lux. The preferred color temperature should be 3200 °K.

The order of tests is as follows:

Check power supply
Tested at P502 on the SSG board.

20 V ±1 V
9.4 V ± 0.4 V
-11V ± 1 V
5 V ± 0.05 V
12 V ± 0.5 V

+15 volt adjust
At TP101, adjusted at R115; adjust R115 so the DMM reads 15 V ± 0.05 V.

V-sub voltage adjust
At TP102, adjusted at R126; adjust until the voltage is as marked on the back of the CCD sensor. The coding consists of two digits or a letter and a digit. The first signifies the integral figure; the second the decimal figure. For example, if the code is c5, the correct voltage would be 12.5.

Code	7	8	9	a	b	c	d	e	f	g	h	i	j
Volts	7	8	9	10	11	12	13	14	15	16	17	18	19

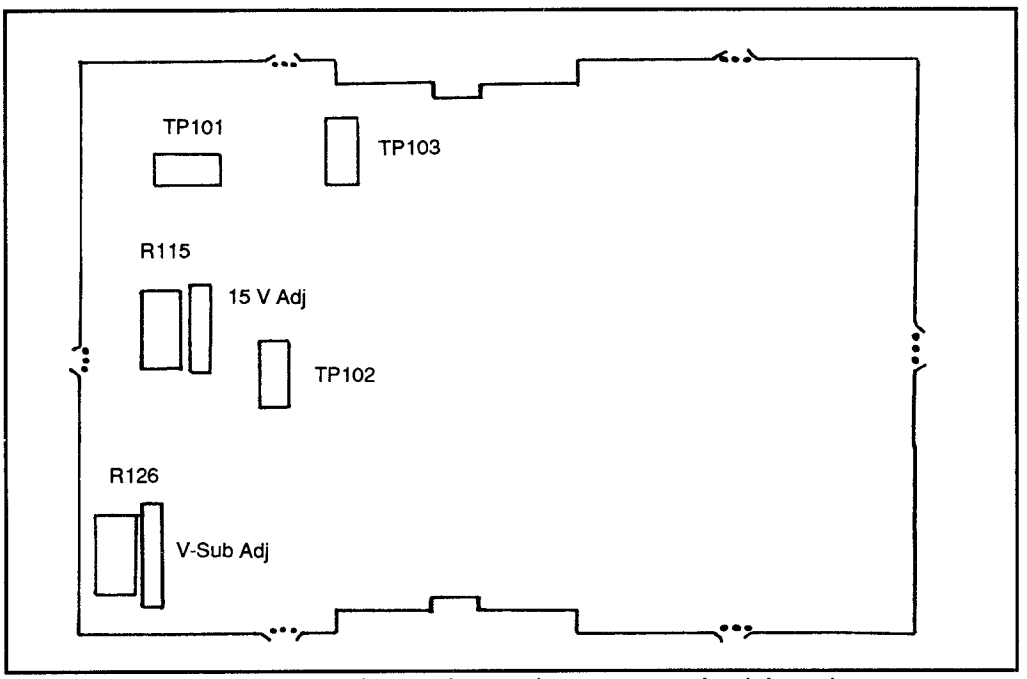

Figure 13: Location of test points and controls on sensor circuit board

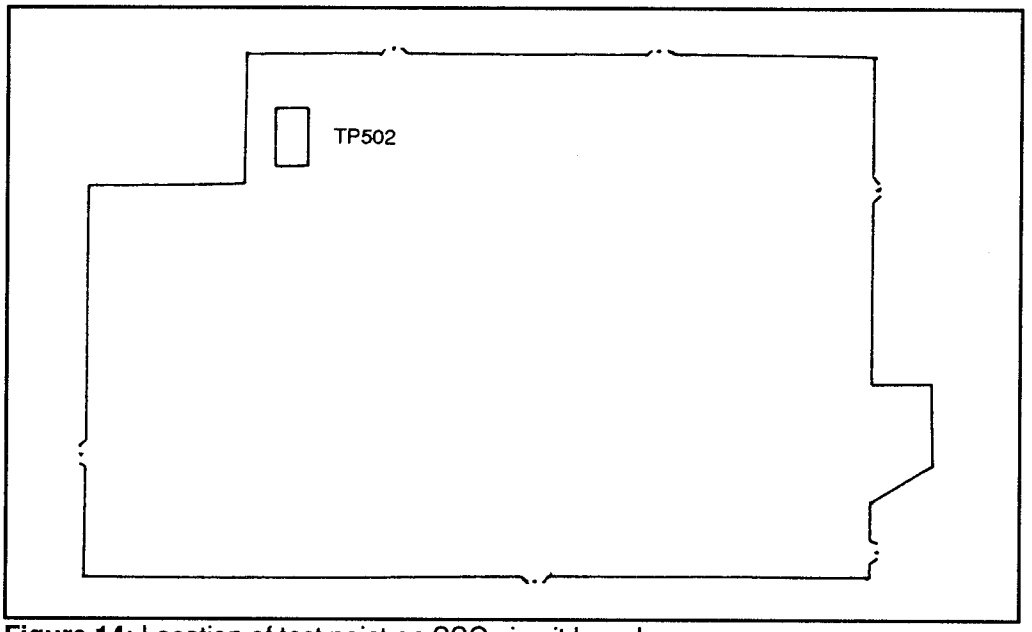

Figure 14: Location of test point on SSG circuit board

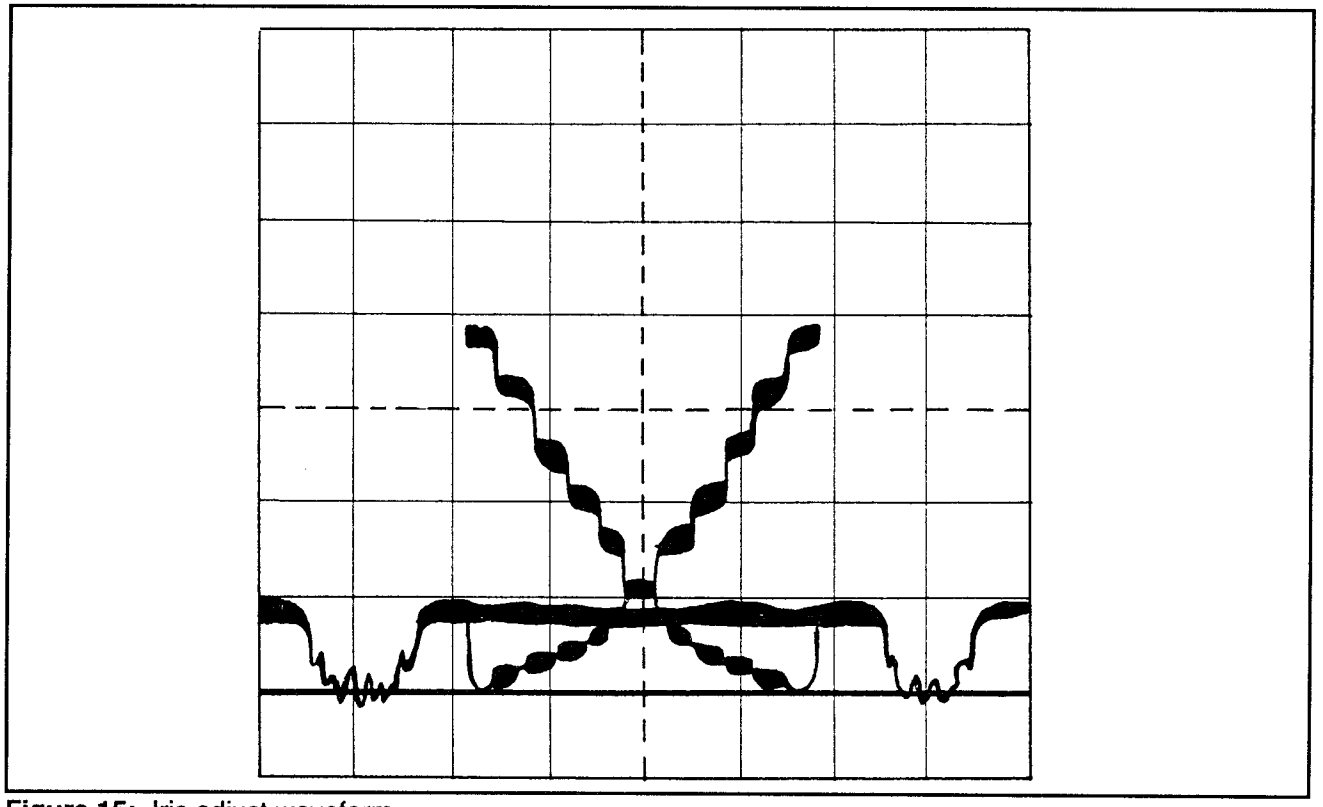

Figure 15: Iris adjust waveform

Iris adjust
Short circuit between TP303 and TP301; short circuit between TP303 and 302; connect oscilloscope to TP201; while camera is aimed at gray scale, adjust R877 to an amplitude of 380 mVp-p.

L-clip adjust
Connect oscilloscope to TP205; with lenscap in place, adjust R217 until scan and blanking periods coincide.

AGC amplitude adjust
Connect oscilloscope to TP205; with camera aimed at gray scale, adjust R212 for an amplitude of 450 mVp-p.

C-balance adjust
Connect oscilloscope to both TP202 and TP209; adjust R295 so that both signals are identical.

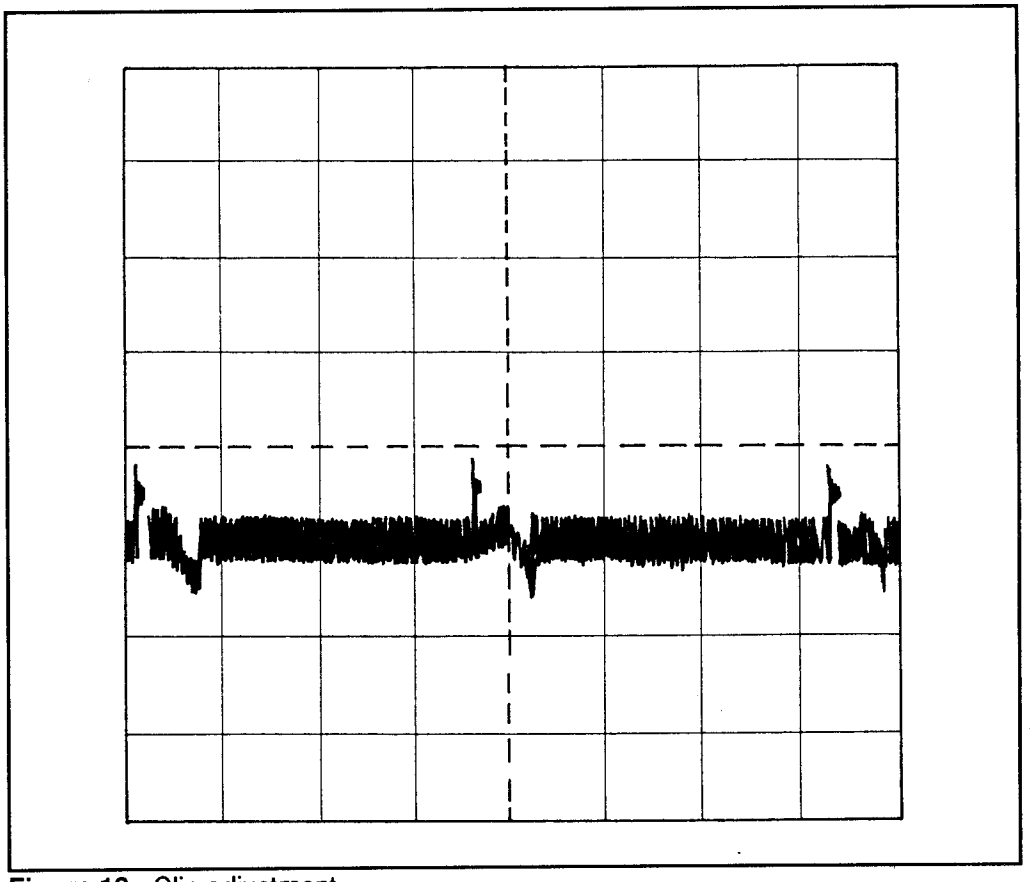

Figure 16: Clip adjustment

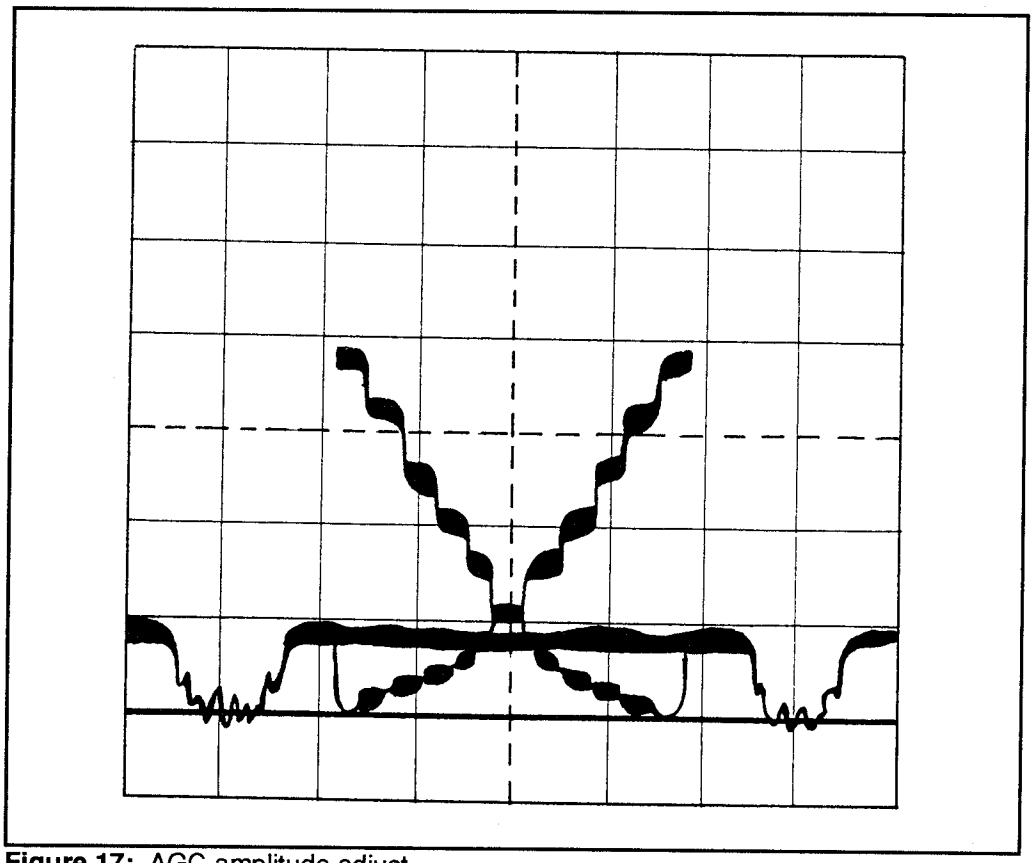

Figure 17: AGC amplitude adjust

Suppress-balance adjust
Connect oscilloscope to TP203;with camera aimed at color bar pattern, adjust R825 to minimize signal leakage.

FH/2 offset R-PED adjust
Connect oscilloscope in X-Y mode to both TP206 and TP207. With the lens capped adjust R236 and R833 so that the dispersion of bright points vanishes.

White balance adjust
Connect oscilloscope to both TP206 and TP207. With camera aimed at gray scale, adjust R259 and R254 to minimize signal leakage.

VE-balance adjust
Connect oscilloscope to TP204; with camera aimed at gray scale, adjust R850 to minimize signal leakage.

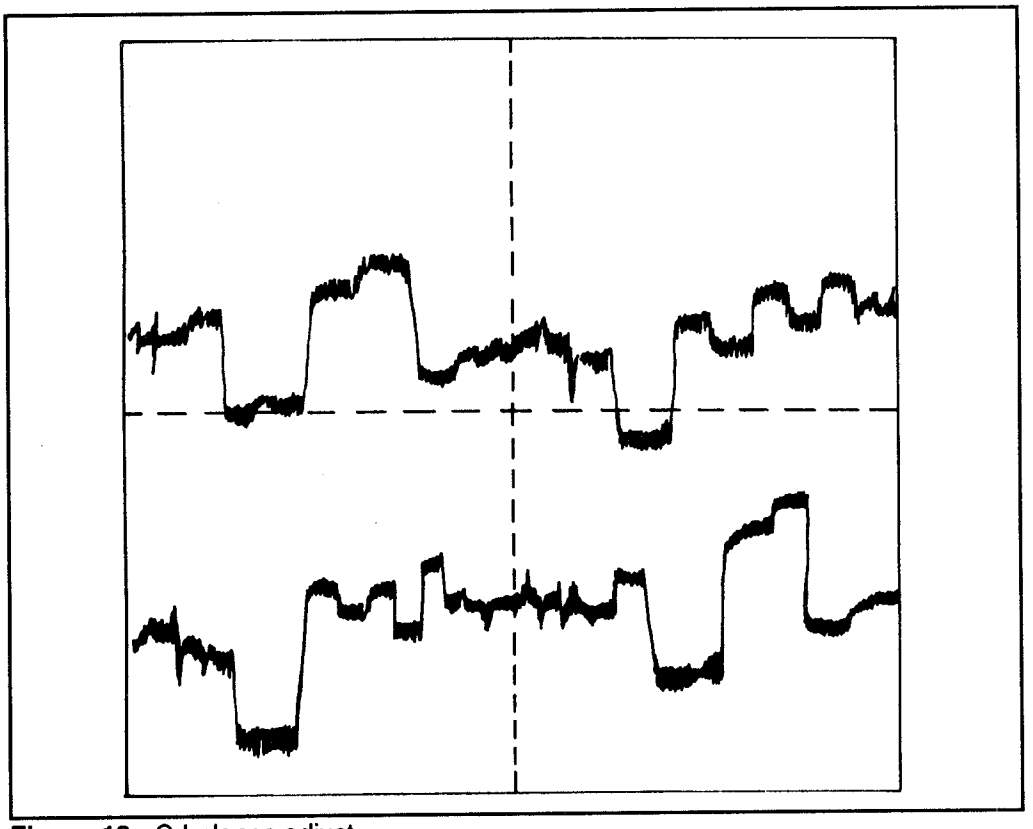

Figure 18: C-balance adjust

YH adjust
Connect oscilloscope to TP402; adjust R482 until signal is 700 mVp-p.

R-Y C/B, B-Y C/B adjust
Connect vectorscope to EE out; with lens capped, adjust R435 and R437 until point of brightness is centered.

R-Y gain adjust
Connect oscilloscope to TP401; with camera aimed at color bar pattern, adjust R412 until red signal becomes 2.1 times the burst level.

B-Y gain adjust
Connect oscilloscope to TP401; with camera aimed at color bar pattern, adjust R420 until blue signal is 1.8 times the burst level. The image should look like Figure 22.

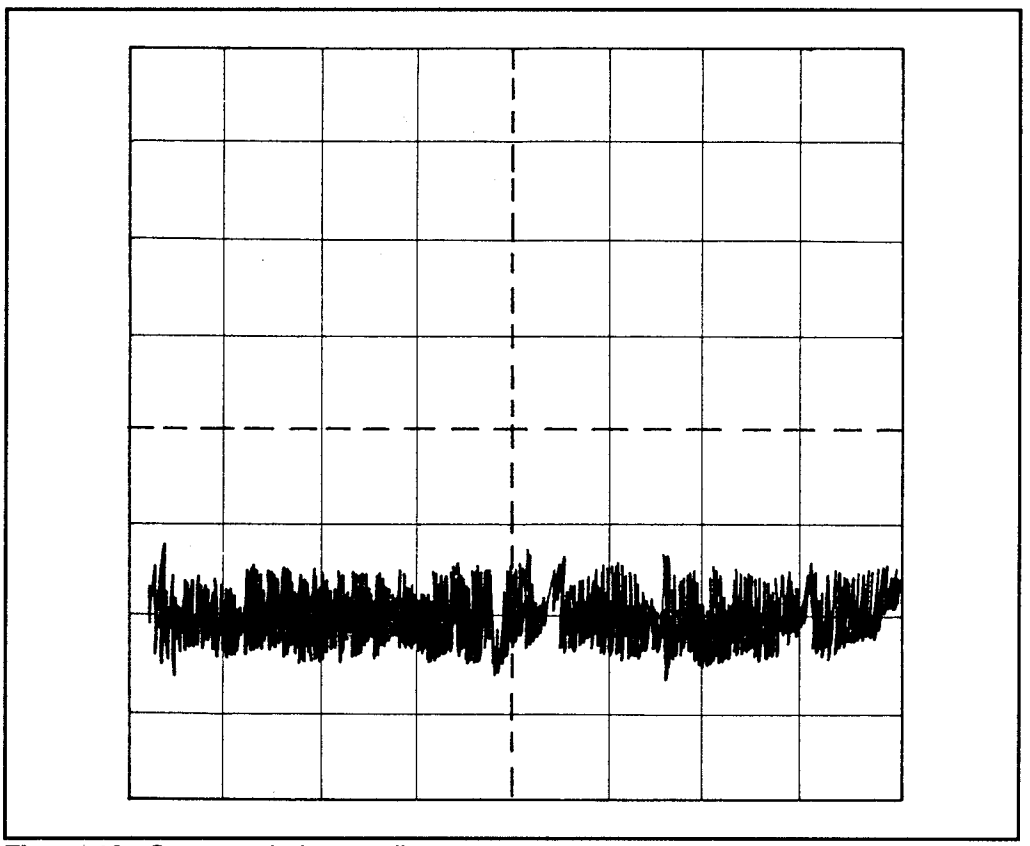

Figure 19: Suppress-balance adjust

Burst phase adjust
Connect vectorscope to EE out; adjust R409 until red brightness point phase is 103°.

Auto white balance adjust
Short between TP301 and TP303; short between TP302 and TP303; connect oscilloscope to TP304; adjust R332 until signal level is 50 mV below the BL portion level.

Break the short between TP301 and TP303; connect vectorscope to EE out; adjust R254 to bring bright spot to the coordinate origin.

Break the short between TP302 and TP303; adjust R330 to bring bright spot to the coordinate origin.

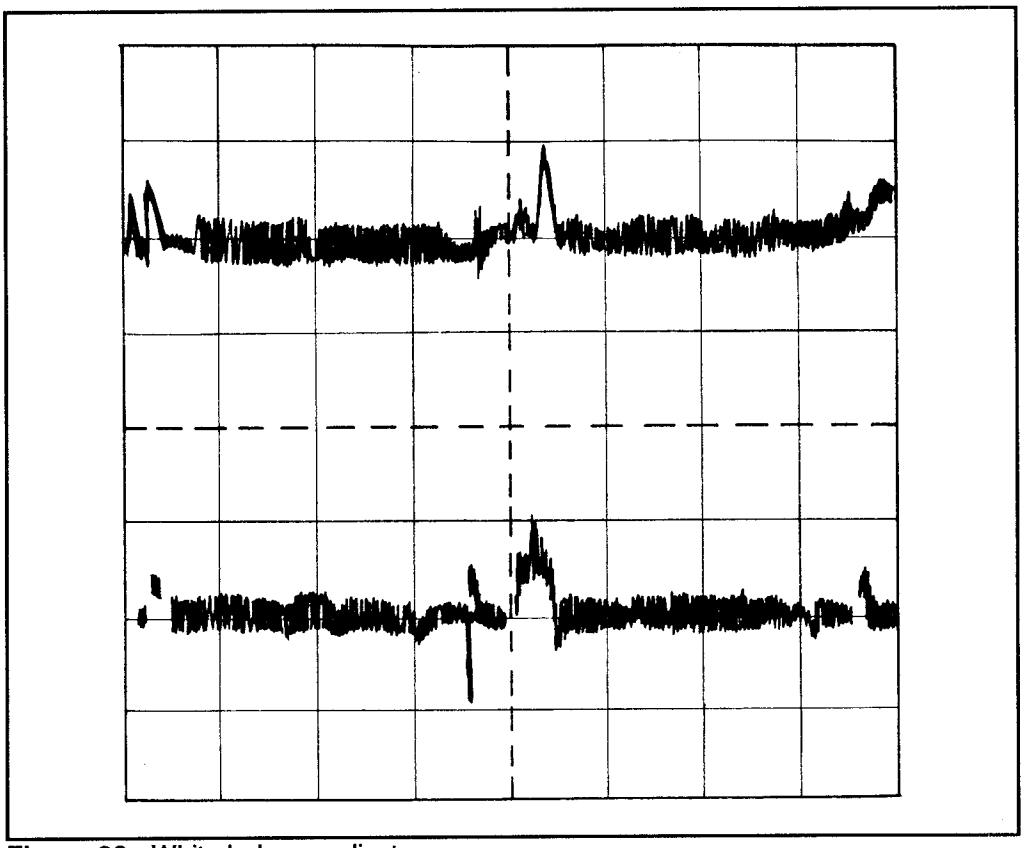

Figure 20: White balance adjust

Cover the lens with a color temperature conversion filter; adjust R306 and R374 so the bright spot coincides with coordinate origin.

H.L. clip adjust
Connect oscilloscope to EE out; with camera aimed at gray scale and lens covered with W12 temperature conversion filter, press and hold backlight compensation switch; adjust R473 so that the ninth white carrier level becomes 230 mVp-p.

Auto focus adjust
Set A/F adjustment chart 200 cm from lens and its perfect square; if camcorder is assembled, remove the three holding screws and remove front cover; place lens in full TELE position and center chart; if deviation is not from 1.1 mm to infinity, loosen autofocus retaining screw with 1.5 mm hex wrench and turn adjusting screw with tracking driver.

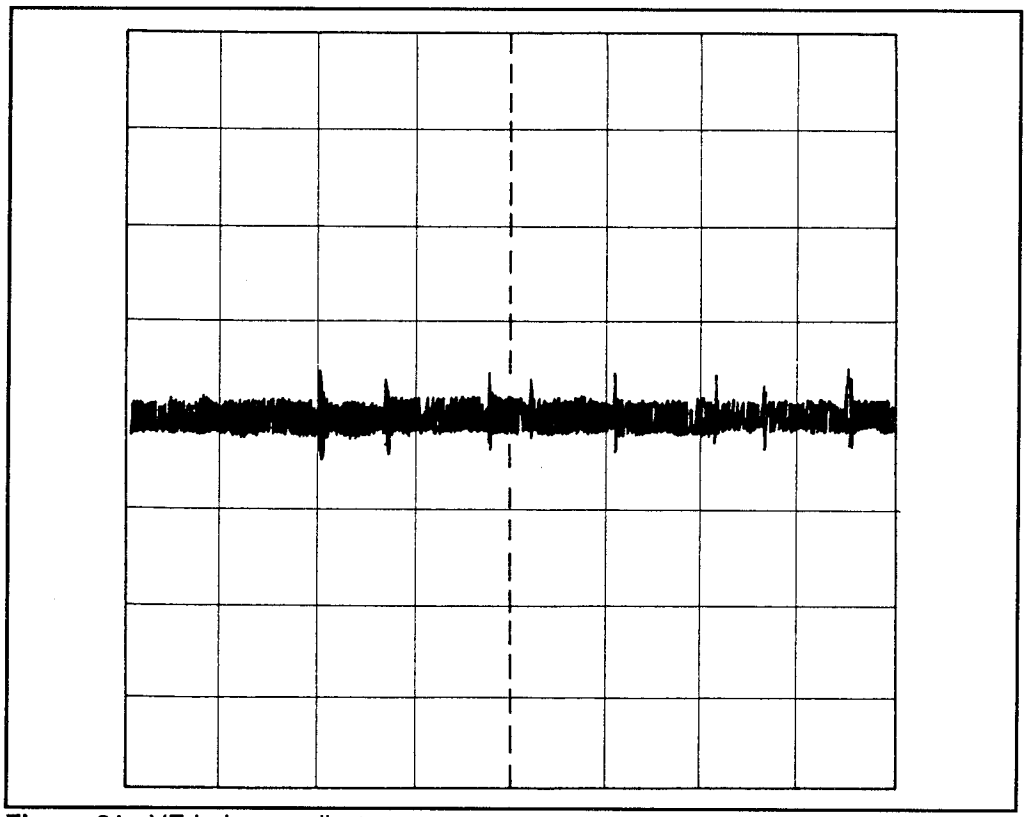

Figure 21: VE-balance adjust

Adjustment of LCD Viewfinder

It's important to remind you again of the delicacy of the devices used inside the viewfinder. Great care must be taken and disassembly should be kept to a minimum. Be sure to wear a grounding strap to avoid any static buildup from damaging the LCD and its related parts.

Testing the viewfinder circuit can be divided into 6 general parts, as detailed below. For each, connect the A/V output of the camcorder to a video monitor. The tint, color, contrast and other controls on the monitor should be placed in the standard setting with good color and depth. Adjust R728 and R731 until the image in the viewfinder is similar to that on the monitor.

For the input signals, use a 1 Vp-p signal, terminated with 75 Ω.

+11 V adjustment
With camera in STOP, connect DMM to TP707; adjust R789 until reading is 11 V ± 0.04 V.

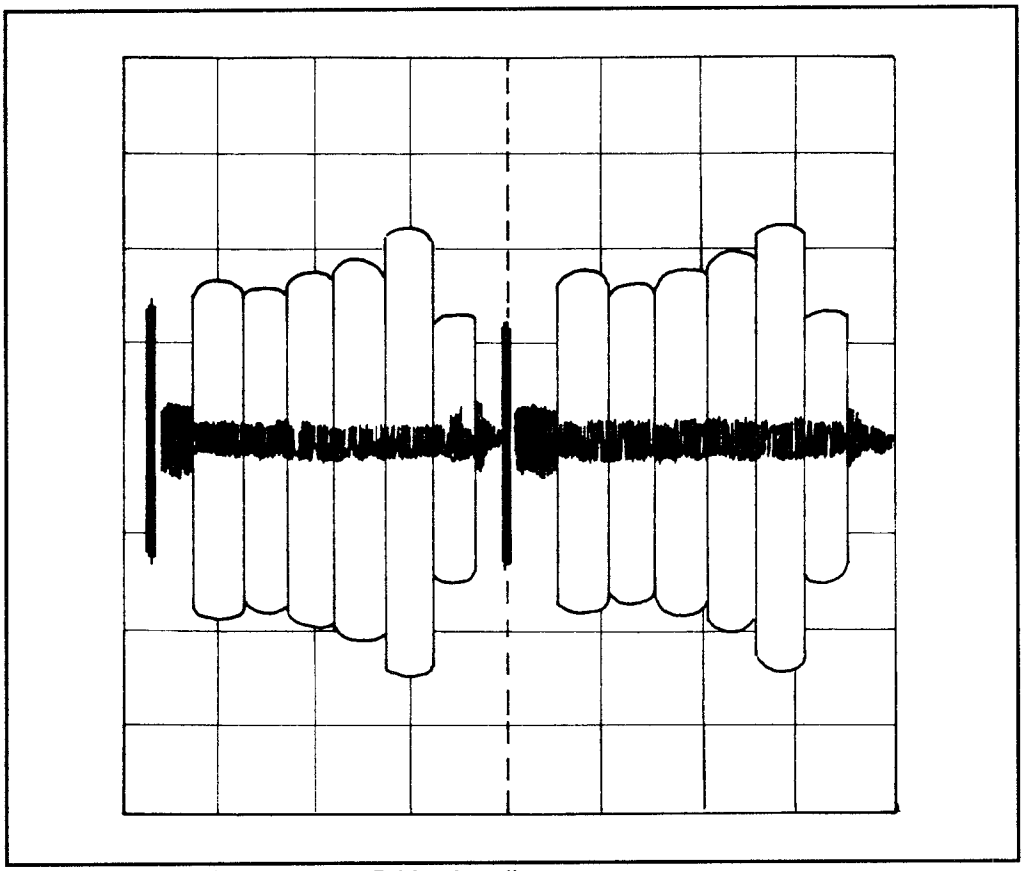

Figure 22: R-Y Gain adjust & B-Y gain adjust

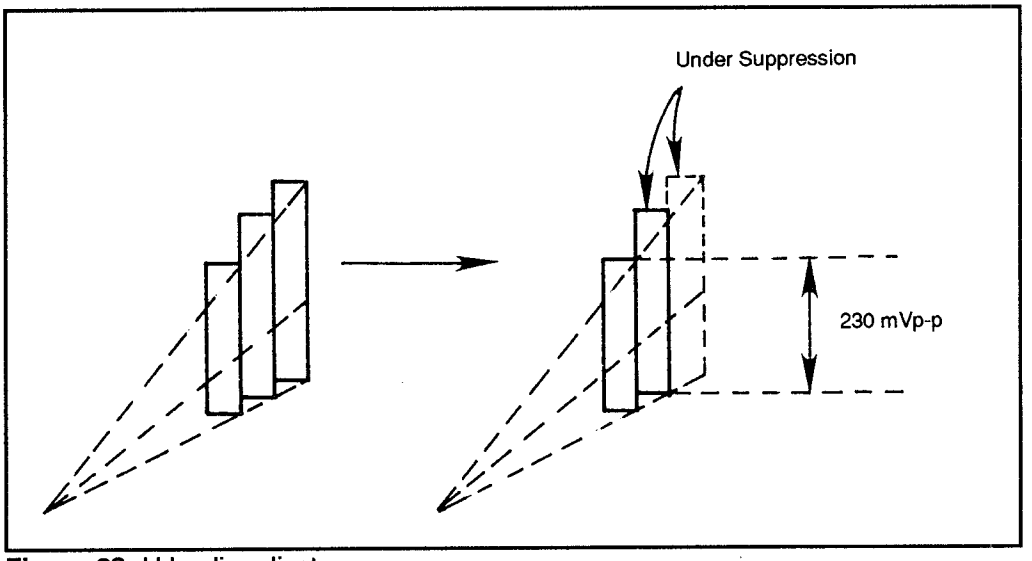

Figure 23: H.L. clip adjust

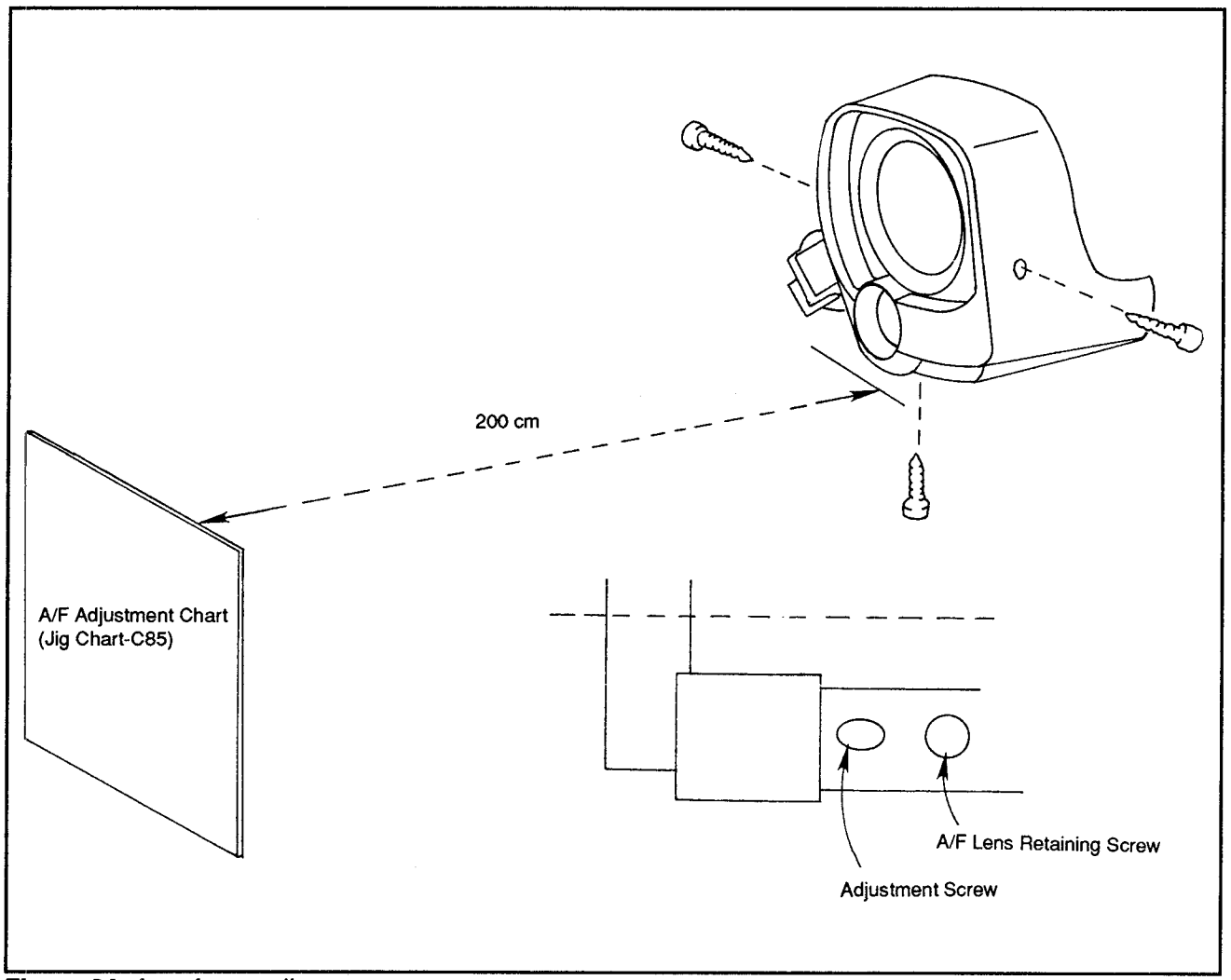

Figure 24: Auto focus adjust

Low frequency AFC
Connect oscilloscope to TP701 (trigger) and TP702, and oscilloscope ground connected to TP706; with signal injected, adjust R766 until phase error is 2.2 ± 0.2 µs.

High frequency AFC adjustment
Connect oscilloscope to TP701 (trigger) and TP703, and oscilloscope ground toTP706; with signal injected, adjust R769 until the phase error at TP703 is 0.1 µs or better.

Contrast gain adjustment
Connect oscilloscope to TP701(trigger) and TP705, and oscilloscope ground to TP706; with signal injected, adjust R720 until the signal voltage at TP705 between pedestal and white peak is 1.1 V ± 0.06 V.

Brightness level adjustment
Set R702 (user control) to center position; with a gray scale inject at EE, adjust R775 to the point that the signal is slightly to the white side of red purple.

White balance adjustment
With signal injected, adjust R738 (green) and R746 (blue) until each gradation has less color.

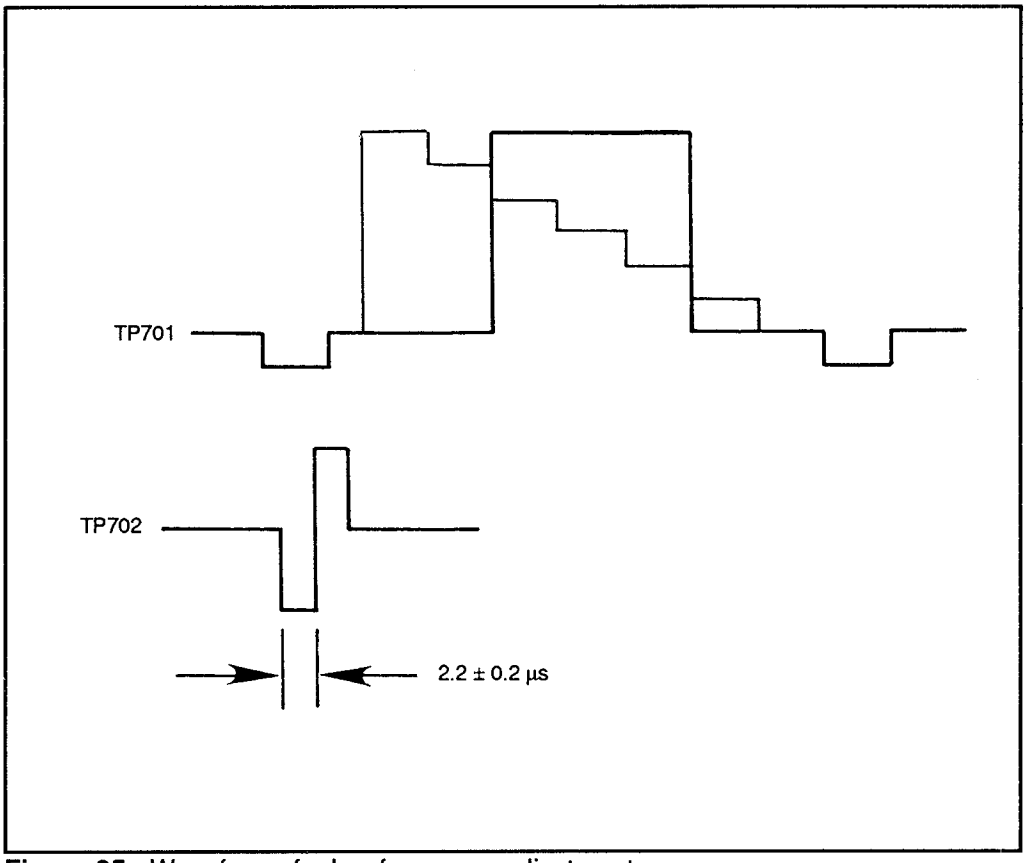

Figure 25: Waveforms for low frequency adjustment

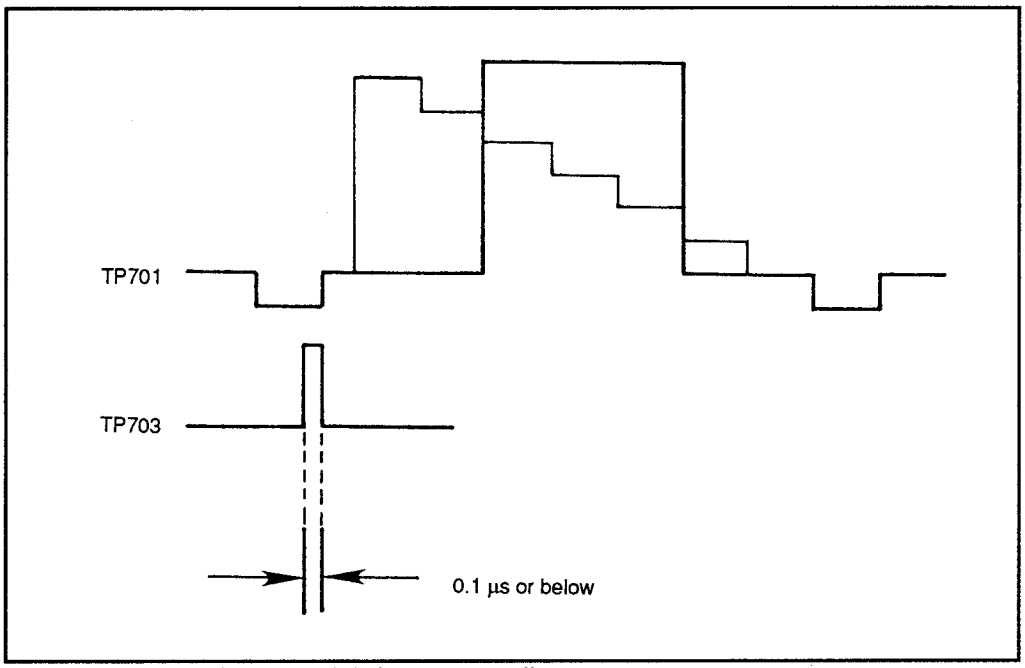

Figure 26: Waveform for high frequency adjustment

5/VCR - A
An Introduction

5/VCR - A - VHS
VHS Standard

A video cassette recorder (VCR) records and plays video and audio signals by using a magnetic medium. The original concept began in the 1940s. The first VCR was developed in 1956 by Ampex. This used a cumbersome and expensive 2-inch video tape taken from a large supply reel. The tape was pulled at high speed across a quadruplex video head and wound onto a large takeup reel. The invention was remarkable at the time but cannot compare with what followed. In this article we will discuss the VHS 1/2 inch video recorder.

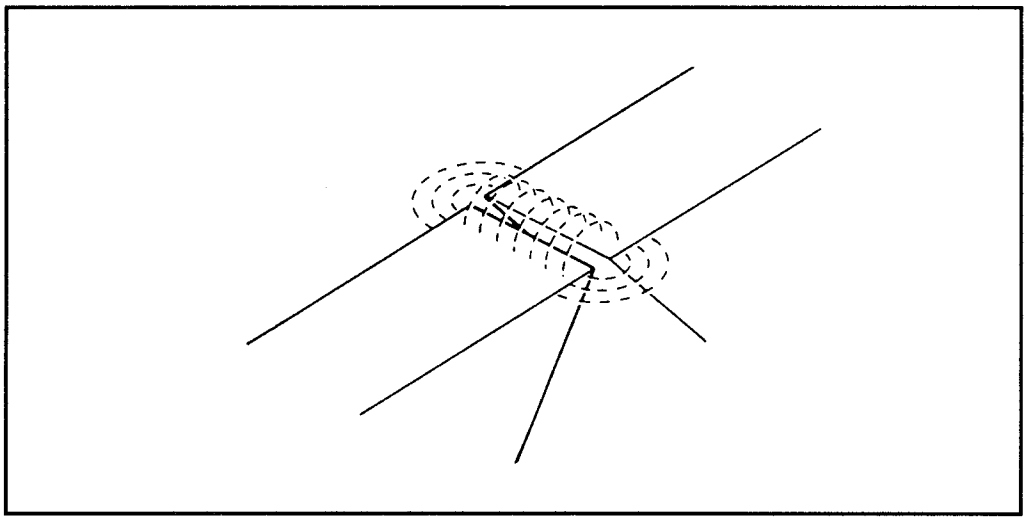

Figure 1: How an eletromagnetic head generates a magnetic flux.

The standard T-120 cassette holds 246 meters of 1/2" tape, providing up to 6 hours of recording/playback. Video information is stored on magnetic tape by means of small electromagnetic heads. The head generates a magnetic flux across the pole gap as shown in Figure 1. Because of the way the tape moves across the head assembly, the information is recorded on in a helical pattern as shown in Figure 2. The effective length of the tape is greatly increased. With the tape moving forward and the head assembly spinning at a high rate, the effective tape speed is also increased. The combination is what allows the VCR to hold up to 6 hours of recording (as compared

to the original design which required huge reels of tape for just a few minutes of poor quality—by modern standards—recording).

The videotape is wrapped around the drum assembly in a horseshoe shape. The video heads are placed 180° from each other and rotate at 1800 rpm. The drum assembly is tilted so the video heads pass in a slanted pattern across the video tape. Each head completes one rotation in 1/30th of a second, and each slant track is recorded during half of a complete rotation of 1/60th of a second.

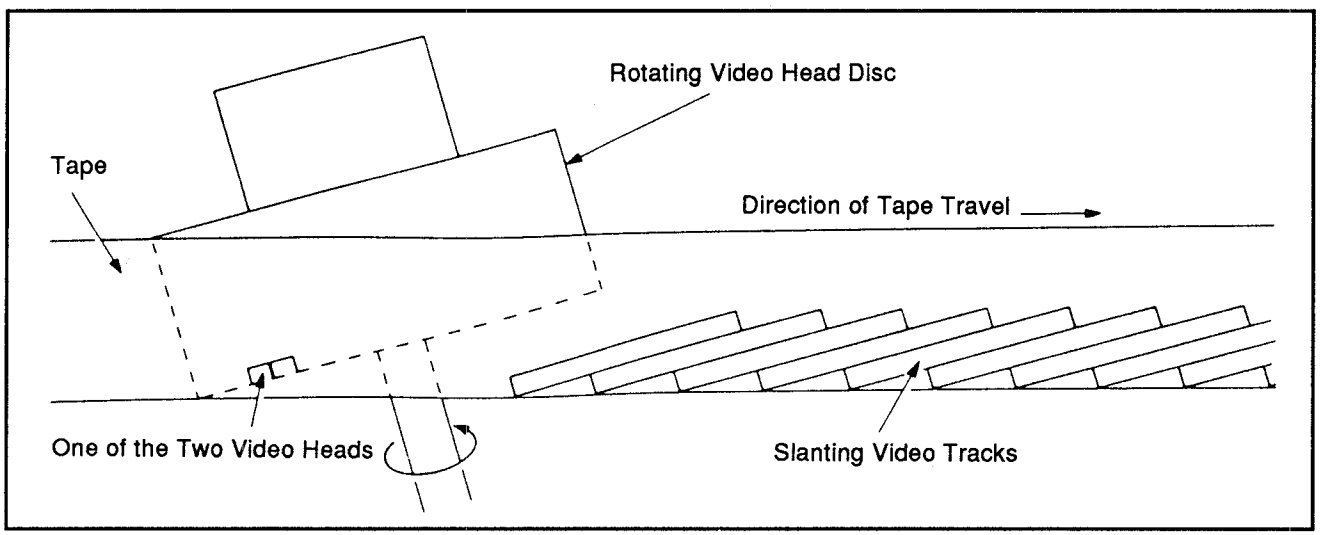

Figure 2: The helical pattern causes the video to be recorded in "stripes."

The drum head is controlled by a single direct drive (DD) motor which rotates the video heads. The capstan is controlled by a separate DD motor which pulls the tape through the VCR. To maintain proper control so the tracks are accurately traced by the rotating heads, an automatic self-governing arrangement called the servo system is used. Servo systems are discussed in *"5/VCR - T - CSP"*.

The modern VCR uses a 2/4 head configuration or a 3/5 head configuration. Two or three heads are all that are required and used to record video images on videotape. The additional two heads are used for special functions like slow motion, pause, still frame, and scanning.

In Hi-Fi models two heads are added to the drum assembly. The audio track is then recorded with the video portion of the tape and in the same helical pattern. As above, the effective increase in relative speed allows for good high-fidelity. Standard audio (monaural) is recording on a linear track at the top of the tape by a stationary audio/ control head located on the exiting side of the videotape stream.

5/VCR - M
Maintenance

Cleaning

General maintenance should include little more than cleaning inside and outside of the VCR. In some cases, simple testing, and possibly checking the unit for proper alignment, may be needed.

External Cleaning

External cleaning can be done with your normal house cleaning. This is nothing more than dusting the casing with a moistened cloth once a week. Environmental elements (smoke, dust, moisture, people, pets, etc.) produce airborne particles that can become deposited on the surface of a VCR. Some of these particles will work their way within the unit and will need to be removed as well.

Vents on the VCR must be kept clear of items that may block proper air flow. Placing items on top of the VCR, or the use of a cover will constrict air flow. Dust covers should be removed when operating VCRs. These vents should be wiped clean during the periodic cleaning period.

Internal Cleaning

Internal cleaning for VCRs and camcorders consists of cleaning the tape path and blowing dust from the inside of the unit.

Blowing the deposited dust particles from a VCR is best done before cleaning the tape path. Compressed air works well. The pressure should not be so high as to blow parts from the unit. Clean the unit in an environment where you will not be contaminating other pieces of equipment.

Check with the service manual for the specific unit being serviced as to what can and cannot be done to the different parts. For example, a motor with sealed bearings will not accept lubrication. Any oil applied can then end up in places that will be damaged, such as video heads.

Oxide builds up on the video heads as a tape is played. The video heads penetrate into the tape oxide when the unit is playing and recording. When the spacing of a video head and a videotape is 1/20,000 of an inch (0.00020"), any buildup of oxide can cause problems.

Cleaning the VCR's audio, tracking, erase and video heads is best done with

cleaning fluid (Freon, if available). The use of technical grade isopropyl (96% pure or better) or completely denatured alcohol are also effective. The use of ethyl alcohol is not recommended since this may leave a residue. NEVER use standard rubbing alcohol. It contains water, oils and various other substances which can cause considerable damage.

You will also need a good quality chamois (such as optical grade) or foam swabs. Never use cotton swabs for cleaning the video heads as cotton strands will catch on the edges of the video heads. Bits of ferrite might be pulled from the mounting, destroying the heads.

The use of commercial cleaning tapes is not recommended. They tend to be abrasive. Some leave desposits and residues behind, actually causing the VCR to become more dirty. These cleaning tapes should be used as a last resort.

The video heads (and the machine in general) should be cleaned after every 100 hours of use, or 3 times per year. If you are playing a number of rental tapes, cleaning will probably be necessary more often. Rental tapes are played in other VCRs, which may have never been cleaned.

The heads may also have to be demagnetized. The problem with this is in finding a demagnetizer suitable for the delicate video heads. Those used to demagnetize audio heads are often too powerful. They can cause damage to video heads, and may even cause the video head to vibrate to such an extent that it shatters.

Cleaning Procedure

Unplug the VCR and remove the cover. Each VCR will differ slightly, but the screws for removing the cover will usually appear similar to Figure 1. Also, the cover will probably have a lip at the front which slides beneath the front panel. With the screws removed, lift upward from the back of the cover. If it doesn't come off readily, look for other screws or catches which are holding it. (A few VCRs actually have a holding screw for the top cover located beneath the machine.)

On top loading machines you may have to remove the tape loading mechanism cover to remove the VCR cover.

Inside there may be a circuit board above the video drum and tape path. Usually there will be a release mechanism allowing the board to swing back or up out of the way to give access. There may also be two or more holding screws through this circuit board.

Once the cover is off, locate the video drum and identify the various parts of the tape path.

Generously soak the cleaning pad with cleaning fluid and hold the cleaning pad against the side of the video drum. Use very little pressure. Let the cleaning fluid do the work. DO NOT SCRUB!

With the wetted pad touching the head assembly, gently rotate it in a complete circle, first in one direction, then the other. Moisten the pad if needed and clean the other heads (audio, tracking, erase). Visually examine the interior and see if other areas need cleaning. The entire job should take only a few minutes.

Wait for a short time to allow the fluid to dry. Plug the VCR in again and see if the audio or video problem has improved. If not, unplug the VCR, wet the pad and try rocking the video drum back and forth against the pad. For the stationary heads, gently rub up and down, then side to side. Test the VCR again. If the problem hasn't been solved, the heads will have to be replaced.

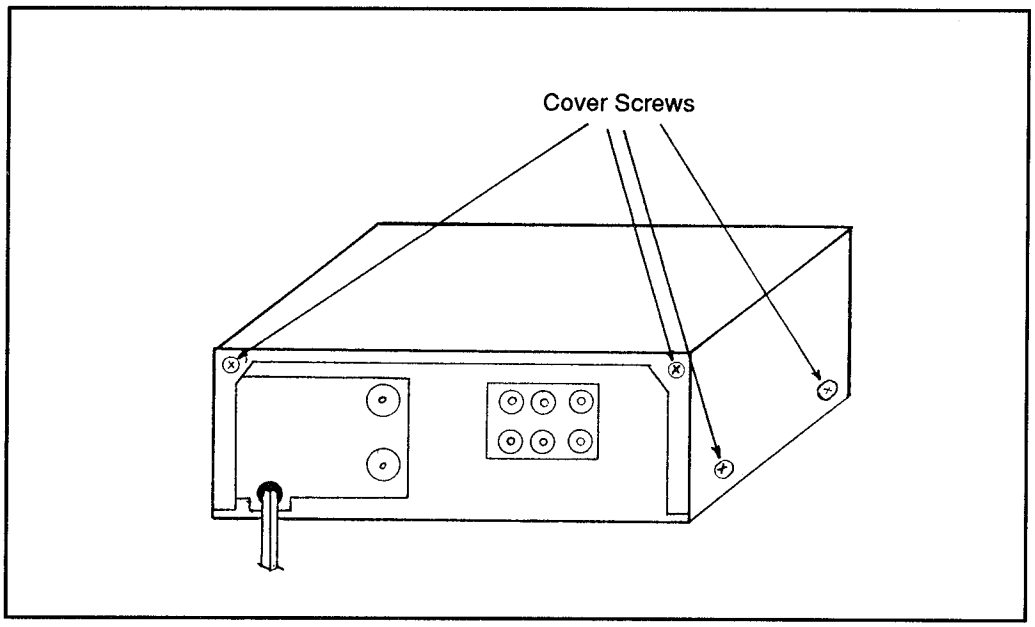

Figure 1: Screw positions for VCR cover removal

Lubrication

The tape transport mechanism is properly lubricated at the factory and additional lubrication should not be required during the first year of operation. Any lubrication will not (usually) be required for the first 1000 hours. Periodic inspection for lubrication will be specified in the machine-specific service manual.

Checking the lubrication during the head cleaning process is, however, a good practice.

When lubricating, remove the old lubricant first. Be careful not to apply too much oil, a drop should do. A squeaky bearing should be lubricated (but not a sealed bearing). Wipe off excess oil with a cleaning stick and alcohol.

Many manufacturers have their own grease and lubricants. Refer to the service manuals for their recommendations. If no recommendations are available, use a high grade oil and/or grease in the unit. Never use WD-40 in electronic equipment.

Places needing lubrication are:

- Loading gears
- Loading gear shaft
- Gutter of chassis
- Gutter of cam gears
- Shaft of loading rings
- Shaft of idler gears
- Ring idler gear
- Between pressure roller bar and shaft
- Between pressure roller and gear assembly
- Between base of guide rollers and gutters

5/VCR - TE
Test Equipment

Test equipment for work on VCRs can be costly. Most of the equipment you would use for electronic repair of other items will work in VCR repair, but you must also deal and conform to National Television Systems Committee (NTSC) video standards, which require access to specialized video equipment.

The equipment you will need for testing and repairing the VCR will be:

Dual-trace Oscilloscope Having a 30 to 50 MHz bandwith, and preferably with true TV sync separators built into the trigger circuits for both vertical and horizontal sweep rates.

Frequency Counter Ranging from 1 Hz to 30 Hz and an accuracy of .01 Hz is best.

Transistor Checker An in-circuit unit will greatly simplify checking the multitude of transistors and FETs.

Video Analyzer No VCR repair person should be without a video analyzer. With this, both TV and VCR servicing can be done with one test unit.

NTSC Color Bar and Pattern Generator Generates the required test patterns needed for checking alignment of monitors/ TVs.

Vectorscope Waveform Monitor Used for processing the color bar signals for proper chroma and luminance alignment.

Test Tapes Manufacturer supplied test tapes are costly. Using a copy for preliminary testing before inserting your original alignment tape into a video machine is advised. You can create test tapes by using your color bar/pattern generator or video analyzer which will allow you to do preliminary alignments of color circuits and luminance circuits. The test tape will have Bar Sweep, Chroma Bar Sweep, Color Bars, various low/high audio signals, and Cross Hatch patterns in 2 speeds.

Video Monitor The best video monitors have the ability to underscan the picture. Adjusting the vertical and horizontal height of a normal TV set can shrink the image size. If this is possible, the TV set could be used as an underscan monitor. Underscanning

allows you to see the video switching point as related to the beginning of the vertical blanking.

Various Tools

Most small metric tools will work well in taking apart and reassembling VCRs. Special tools such as a binding jig, reel tension gauge, 500 and 100 gram spring tension gauges, gear spacer, back tension meter, cassette housing positioning jig, reel disk height jig, torque gauge and adaptor, tension measurement reel and a fan-type tension gauge may be required.

Alignment Tools

Mechanical adjustments are machine specific and very complex. There are no universal mechanical adjustments for modern VCRs. Servicing of the circuits is explained in this section as well as an overview of typical mechanical loading sections. A machine specific service manual will be required.

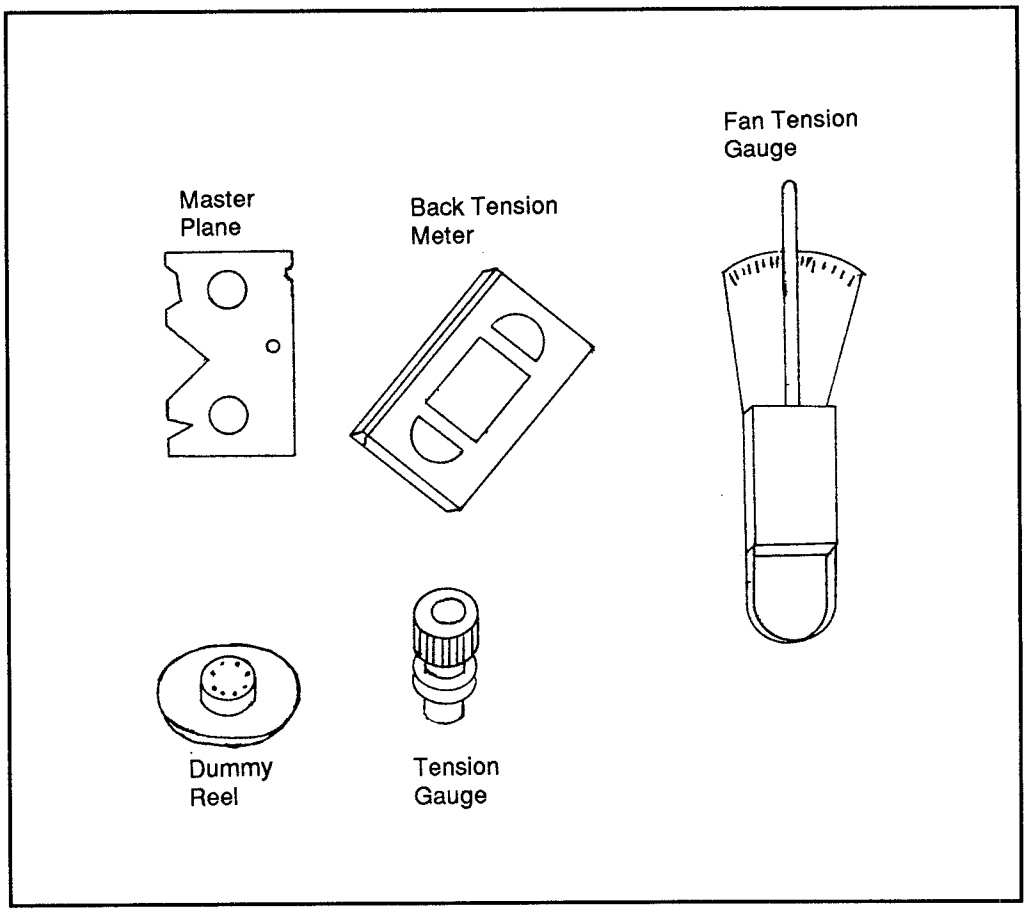

Figure 1: Alignment tools

5/VCR - TR - AP
Audio Problems

5/VCR - TR - AP - M
Monitoring

Figure 1 shows the audio monitoring circuits. The two audio channel circuits are identical as are the audio record circuits. The Dolby encoder is sampled for monitoring purposes.

The sampled signal without Dolby is sent to the monitor amplifier. The output of the monitor amplifier is sent to an IC that controls the front-panel, monitor-select switch, which allows the user to select from three types of monitoring.

The user can select left and right channels (the default position), right channel only (sent to both left and right outputs), and left channel only (same as right channel only).

Both channels are controlled by an attenuation amplifier which controls the gain from a varied DC current. A higher current will apply more attenuation on the audio signal. This allows for control over the volume of output from the external connectors or the RF connector.

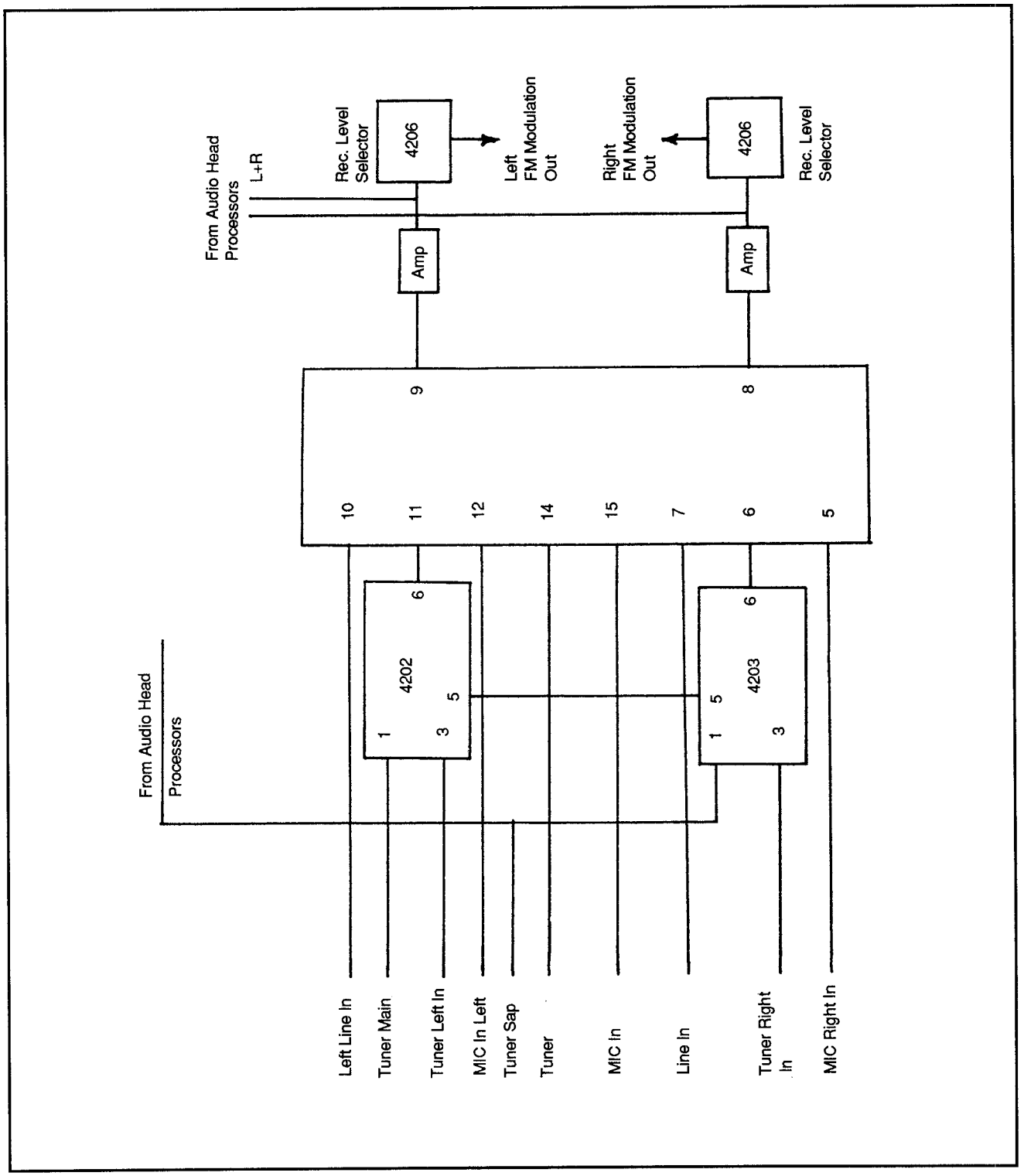

Figure 1: Audio select circuit

5/VCR - TR - AP
Audio Problems

5/VCR - TR - AP - R
Recording

Audio Selections

Audio in a VCR is recorded in a many ways. There is mono, linear stereo, and/or Hi-Fi stereo. When hooked to the proper TV or monitor, and possibly your stereo receiver you can have access to each of these audio selections. Audio output can be through the separate audio out for mono, through audio right and audio left outputs for stereo, or through the RF converter which provides video and audio channels. When looking for audio problems, use an audio monitor device and your oscilloscope.

Troubleshooting audio is simply following the audio from one end to the other. Check any adjustments associated with audio circuits first.

Audio Track

The VHS standard allows for an audio track with a width of 1 mm, recorded on the top edge of a videotape. Mono records on the entire 1 mm space allocated. Linear Stereo records by splitting the left and right signals into 0.35 mm each. This leaves a guard band of 0.3 mm between the audio heads which provides a decent separation of the two audio channels. Hi-Fi audio records along with the video signal via Hi-Fi audio heads in the drum assembly as shown in Figure 1.

Audio Heads

Audio heads mounted on the drum asssembly have a different azimuth (angle) than the video heads. More room is allowed for audio information intermixed with the video information through depth multiplex recording. A typical Hi-Fi VCR can offer a 30 to 40 dB improvement in the S/N (signal-to-noise) ratio. Most units with Hi-Fi audio also have a conventional monaural head to record or play the linear audio portion of the video tape. Because of this, tapes recorded in linear stereo will be played on most Hi-Fi units as monaural. Some units are equipped with both linear stereo and Hi-Fi stereo and can be mixed or played separately. If the unit is playing both linear and Hi-Fi audio, the unit will tend to flange, as the two audio systems do not exit the VCR at the exact same time.

Standard Linear Audio

Standard linear audio tends to have background or hysteresis noise created by the physical construction of the videotape. This noise occurs in the frequency range of about 5 or 10 kHz. In a monaural VCR this noise is not usually noticed, but

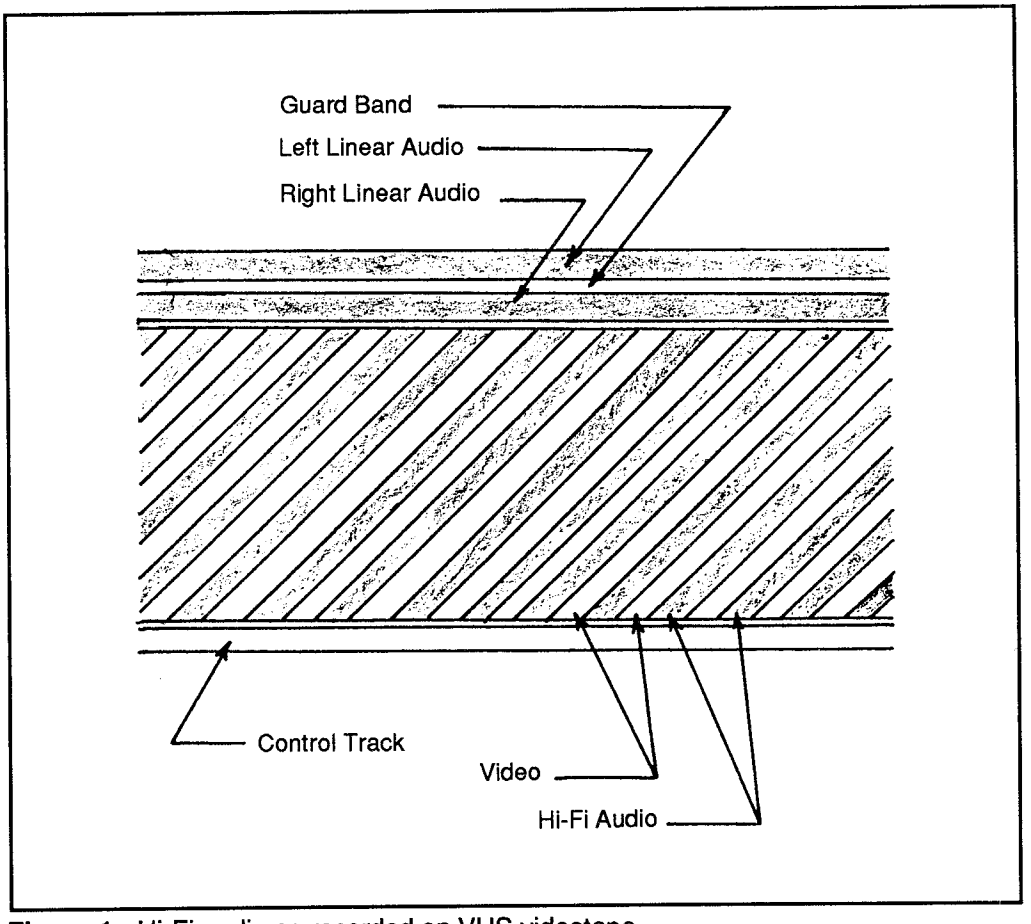

Figure 1: Hi-Fi audio as recorded on VHS videotape

in stereo VCRs which have a smaller head size and audio signal strength, background noise can become as great or greater than the audio signal. To help reduce this noise a Dolby noise-reduction system is used (Dolby is not used in Hi-Fi VCRs because of the already improved S/N ratio.)

Most circuits for processing Dolby noise reduction are contained in a single IC. The entire Dolby section must be replaced if found to be bad, as acquiring the single IC is nearly impossible.

Usually, if you are hearing or registering a noise-related problem, check to see that you are playing the tape back in the format in which it was recorded. If recorded with Dolby, play it with Dolby.

If recorded without Dolby, do not use Dolby. If this is not done, distortion will be increased.

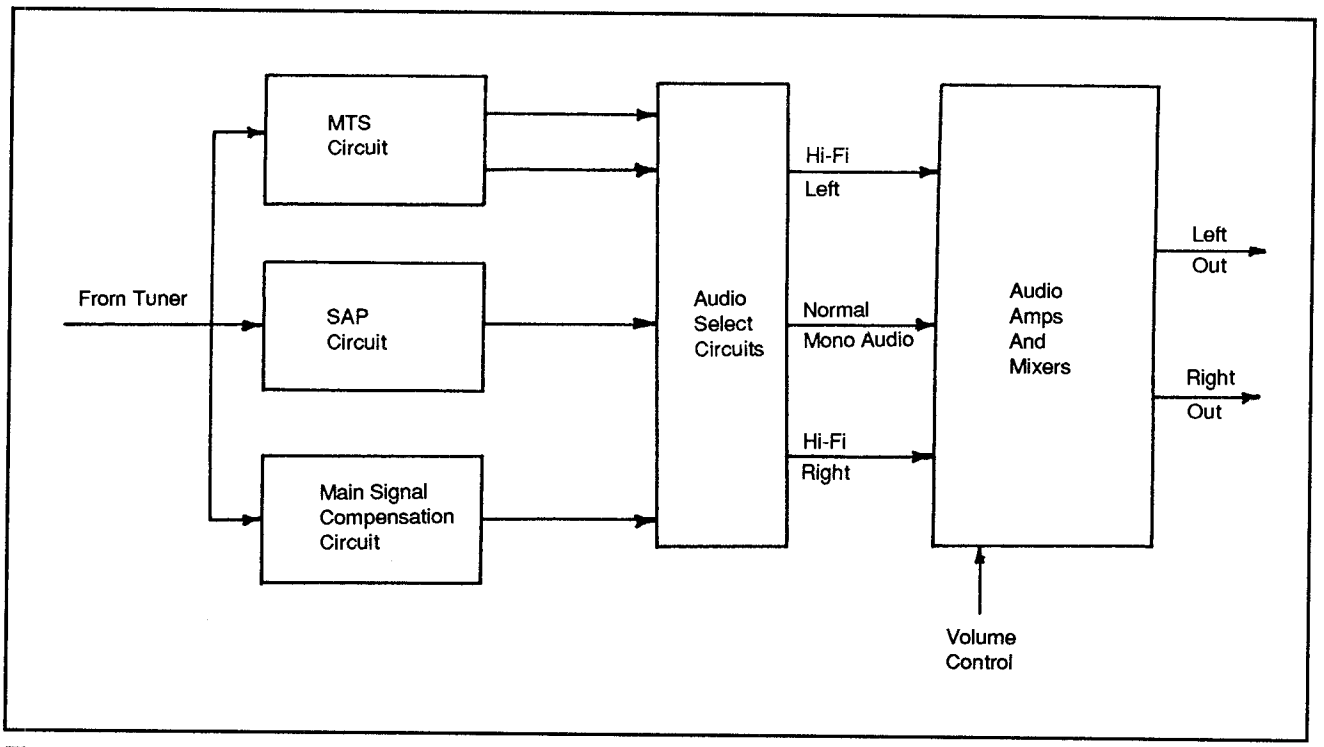

Figure 2: Audio circuits for a typical VHS recorder

Audio Record Circuit

Figure 2 shows the audio record circuits of a typical VCR. Left and right channel audio circuits are identical. With the exception of the switching circuits, most of the components are IC based.

Source (incoming) audio in a typical VCR starts from either external inputs or tuner inputs and is controlled by a relay. The channel source audio is amplified by the line amplifier within the amplifier IC. The output signal is sent to the Dolby encoder (if used). The combined output signal is sent to the record amplifier (which may be within the same IC as the line amplifier). The output is added to the bias signal from a bias oscillator. The combined signals are then sent to the audio head.

A relay for the left channel may be used to disable the recording of audio information for those units with audio dub. The right channel is recorded on, but the left channel remains untouched when the relay is turned off. When audio dub is selected, the system control disconnects the bias oscillator and the record amplifier from the left-channel audio head only.

Audio Playback Circuit

Figure 3 shows the audio playback circuit of an average VCR. Both left and right in this section are again identical. Audio travels from the left audio head and is

outputted to the audio line connector. Grounding is provided to the audio head through a series of transistors. Audio from the audio line connector is amplified by the playback equalizer, the line amps inside the playback equalizer, and the line amplifier. Left-channel audio from the amplifier is sent to the Dolby decoder. The Dolby decoder outputs audio and sends it to the monitor amp.

Crosstalk Canceller

Some stereo VCRs include a crosstalk canceller circuit. This circuit eliminates the leak of magnetic flux from the right and left channel audio record/playback head during a monaural audio dub. Not all crosstalk can be eliminated—some information may drift between channels.

The output of the right channel is sent to the feedback input, a preamplifier of the left-channel audio section. The feedback is turned on during record or audio dub modes. The feedback signal can be adjusted to the same level as any crosstalk signal that may be appearing at the feedback input. The feedback and crosstalk signals are cancelled because the two signals are of the same amplitude, but at different input levels. If the feedback control is properly adjusted, the feedback signal will have no effect on the left-channel audio. Check the crosstalk alignments if a problem persists after any recording or dubbing.

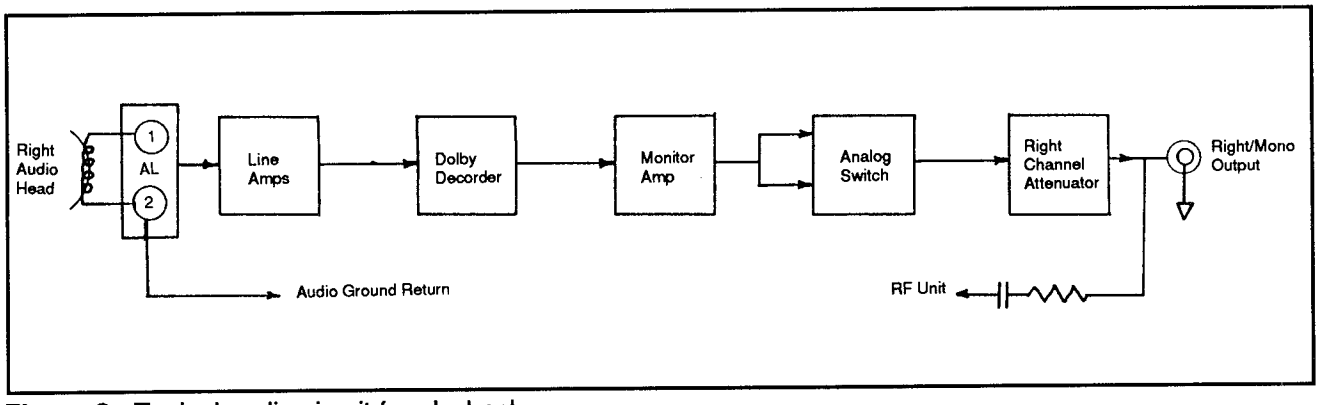

Figure 3: Typical audio circuit for playback

5/VCR - TR
Troubleshooting and Repair

5/VCR - TR - CSP
Control and Servo Problems

Control Problems

Central LSI Controller

All the processing required to do the aforementioned functions occurs in a single LSI chip. Many inputs and outputs inside the LSI chip are unable to be tested. Each of the control signals fed to the LSI must be checked to determine if the problem is in this circuit. A frequency counter and oscilloscope will make this troubleshooting easier. If, in fact, all signals are being sent to the servo IC, and proper adjustment signals are not being produced, the IC is bad and must be replaced. (Be forewarned that mechanical problems can cause erroneous primary information to be sent to the IC.)

The servo timing chart is shown in Figure 1 and a block diagram of the servo and pulse circuits is shown in Figure 2.

Servo Problems

Typical Problems

The servos are the systems that keep the capstan, drum head and video tape moving at the correct speed. Servo problems can be mechanical and/or electronic. Typical problems in the servo section are a defective motor, incorrect voltage to the motor, loose or worn drive belts, or incorrect speeds.

Begin by checking the belts. Worn or broken belts are the most common cause of servo problems. If this doesn't solve the problem, and there are no obvious solutions (an obviously bad motor, broken wire, etc.), go through alignment procedures discussed in the mechniacal adjustment articles.

The drum servo system typically consists of a rotating upper drum to which the video heads are mounted.

Drum servo problems are almost always associated with video problems. With Hi-Fi machines audio problems may also be affected (because the audio is

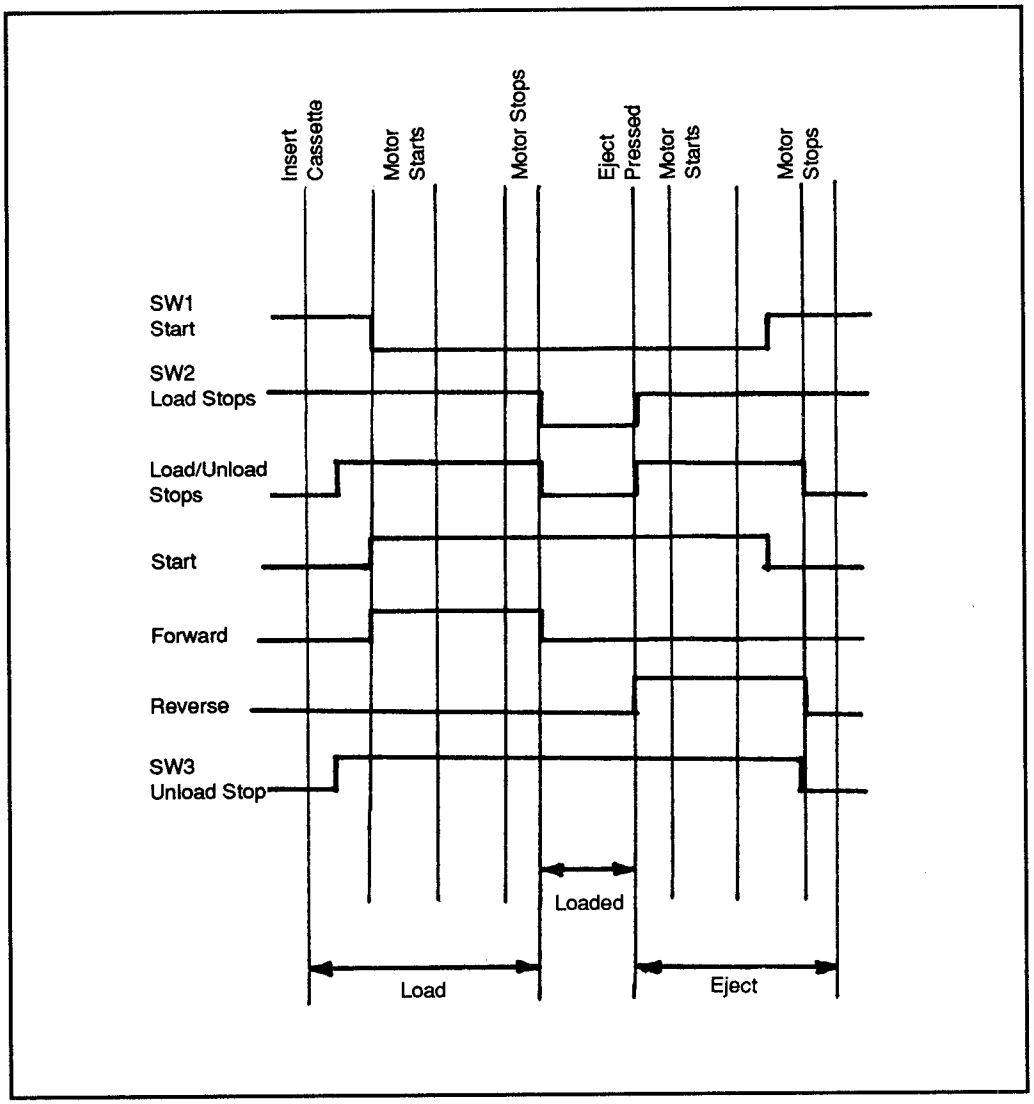

Figure 1: Typical servo timing chart

recorded along with the video signals). Figure 3 shows a typical drum cylinder phase-control circuit.

Frequency Generator

The drum is controlled by a frequency generator (FG) device which produces a 360 Hz signal. The signal is divided by 12 to produce 30 Hz. It is then compared to a divided vertical sync frequency during record, and a divided 3.58 MHz signal (895 kHz = SP, 447 kHz = LP, 298 kHz = SLP) during playback. The resulting error is sent to the cylinder motor drive circuit to maintain the 30 RPS. This speed is constant regardless of the capstan speed.

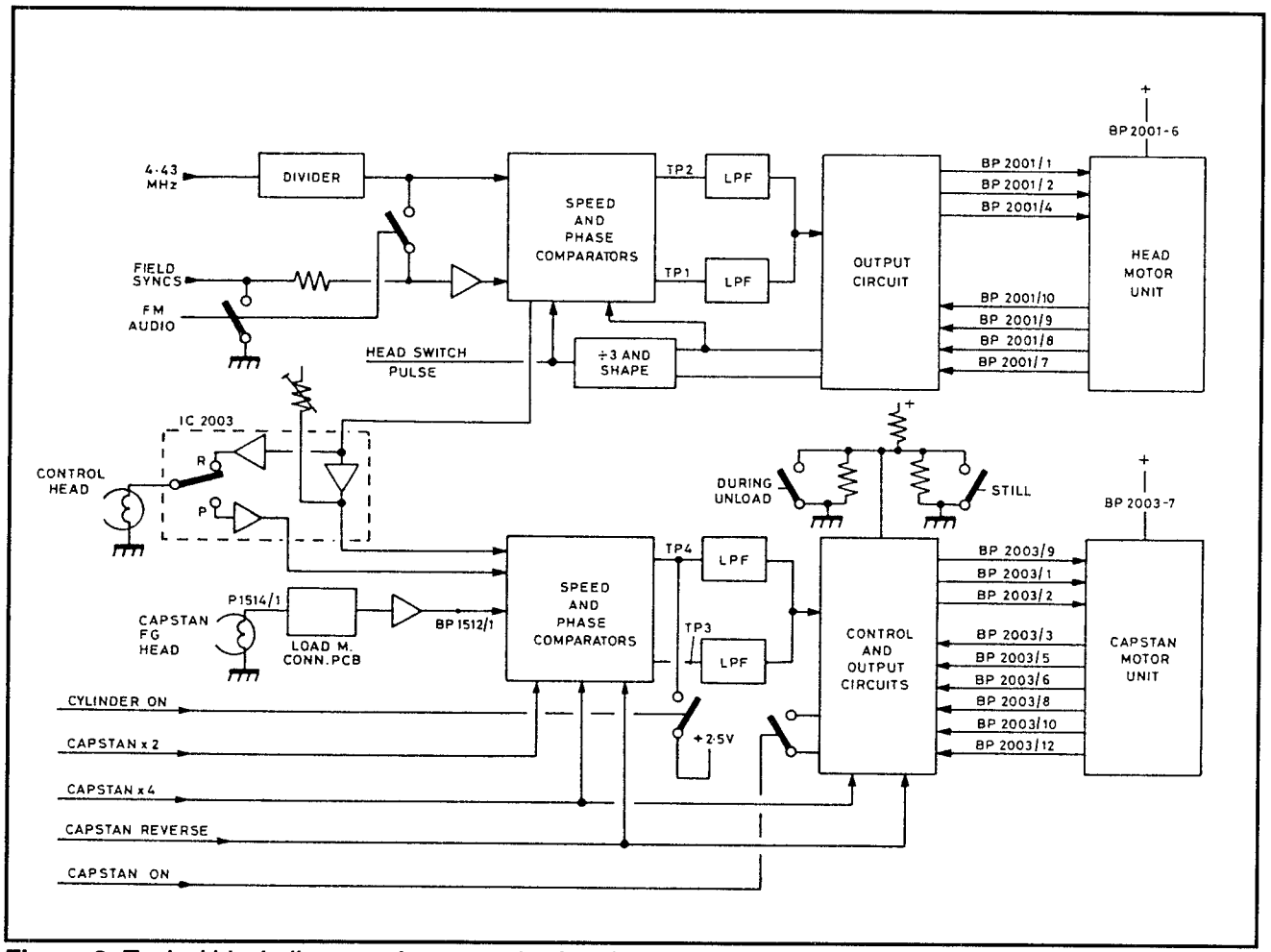

Figure 2: Typical block diagram of servo and pulse circuits

Pulse Generator

A pulse generator (PG) pulse signal is generated in the flywheel of the cylinder motor relaying the position of one of the two video head tabs. It is produced by a magnet and pickup coil with each revolution. The PG pulses create another waveform (Figure 4) called the RF switch pulse. To create the RF switch pulse (30 Hz), the positive pulses are used to flip-flop the video head during playback.

During playback, when the waveform is in the negative cycle, the track 1 head is switched on. The track 2 head is on during the positive cycle. By adjusting the pulse generator monostable multivibrator (PG MM) control, the position of the switch point where each head is turned on can be placed at the required 6.5 horizontal lines before vertical sync. During recording the motor phase control is set by comparing half of the vertical sync (30 Hz) with the 30 Hz PG signal.

It may be necessary to make adjustments to the cylinder phase while the VCR is in the forward and reverse search modes. You will be trying to lock the noise bar in one position so it does not enter the vertical interval. The reference 30 Hz signal is adjusted to 29.49 Hz in forward search and 30.51 in reverse search.

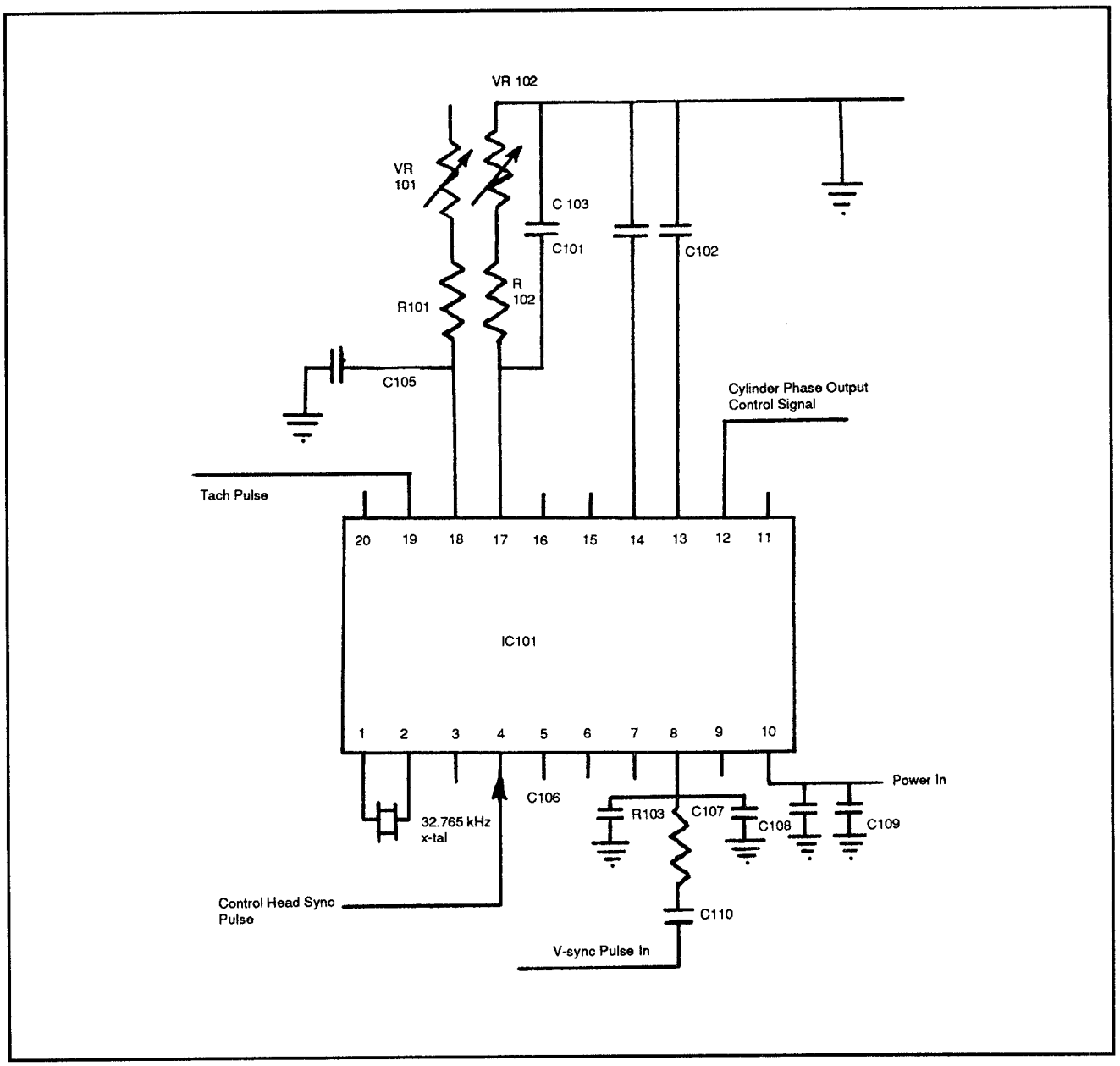

Figure 3: Drum cylinder phase-control circuit

Capstan Digital Speed

The capstan digital speed is created in a fashion similar to that of the drum cylinder drive circuit. The speed select circuit controls the division of the 3.58 reference signal to achieve the needed frequencies.

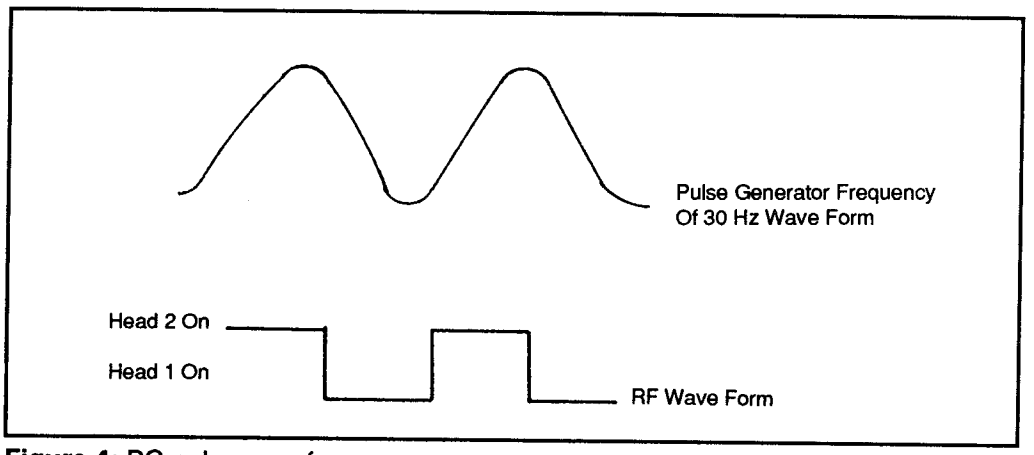

Figure 4: PG pulse waveform

5/VCR - TR - MA
Mechanical Adjustments

5/VCR - TR - MA - HA
Height Adjustments

Reel Table Height

To adjust the reel table height, you will need to use the reel table height jig and the reference height plate. The height of the reel table is adjusted by changing the washer stack located under each reel table. Begin by placing the height reference plate into the VCR. Place the height reference jig on the plate and check the reel table height. If the reel height needs to be changed, this can be accomplished by using the two sizes of washers available (0.25 mm and 0.5 mm reel table washers are available).

Tape Guidepost Height Adjustment

The height reference plate will be needed. Place the plate in the VCR. Adjust the nut on top of the guidepost for a clearance of 0 ±2 mm.

Impedance Roller Height Adjustment

The height reference plate and reel table height gauge will be used. Install the height reference plate into the VCR. Place the reel table height gauge on the height reference plate. The nut on top of the impedance roller should be adjusted for a clearance between 1.5 and 2.5 mm.

Interchangeability Checks

The confirmation check is only performed after any service operation which could affect the tape. Such servicing may include tape guide replacement, head replacement, reel replacement, etc. If this test passes, (and there is no tape creasing or frilling), then no tape guide adjustment is necessary. The tracking preset adjustment should be made before this adjustment. Refer to the service manual for the proper test point.

Both channels of the scope are used. A monoscope test tape is inserted and played. The tracking control is adjusted counterclockwise for a maximum FM envelope (which is monitored by channel B of the scope).

The maximum envelope amplitude will be 3 graticule divisions. The minimum envelope amplitude will be 1.6 graticule divisons. The tracking control is turned clockwise until a maximum envelope amplitude of 3 graticule divisions is obtained.

The minimum envelope amplitude should be 1.6 graticule divisions.

5/VCR
Video Recorder

5/VCR - TR	Troubleshooting and Repair
5/VCR - TR - MA	Mechanical Adjustments
5/VCR - TR - MA - HA	Height Adjustments

5/VCR - TR - MA
Mechanical Adjustments

5/VCR - TR - MA - TA
Tension Adjustments

Tension Arm Adjustments

The tension arm adjustment is done with the VCR in the play mode without a cassette. The tape-end sensor should be covered with black tape. The VCR loading mechanism will have to be loaded before the VCR will go into play.

For camcorders, simply close the cassette holder. For VCRs trip the load sensor switch so the cassette will load.

Place the unit in the play mode by pressing play. The tape transport will load. Loosen the screw holding the tension band holder. Adjust so the clearance

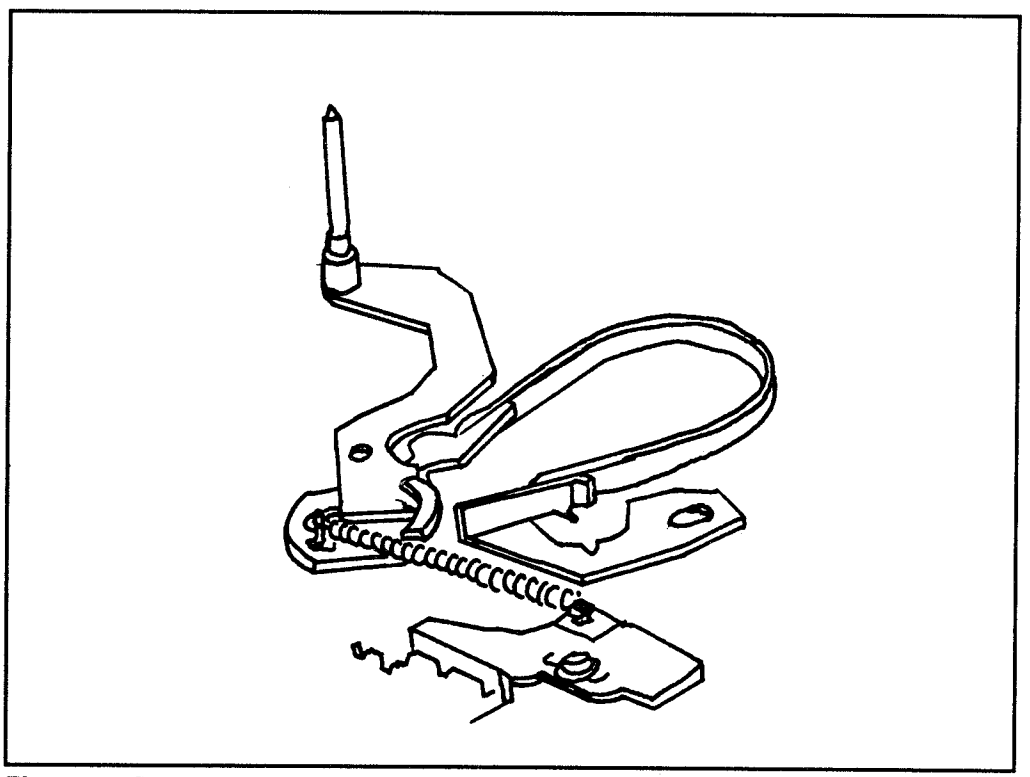

Figure 1: Back tension spring

between the tension arm and section A of the supply end sensor holder is 0.6 to 1.2 mm. Tighten the screw and remove the tape from the tape-end sensor.

Back Tension

The back tension spring is shown in Figure 1. Proper alignment will ensure proper playback of the service tape. Playback will be with minimum skew error (the picture displacement in the line following head switching) when this alignment is correct.

Once one of the back-tension tapes is inserted into the VCR, press play. The reading on the gauge should be between 27 and 38 on gauge A, or between 23 and 32 on gauge B. If the reading is higher than 45 on gauge A, or higher than 33 for gauge B, adjust the tension arm spring. This should restore back-tension to within tolerance levels. If the tolerance is still outside specs, check the tension arm for proper alignment (as previously described).

5/VCR - TR - MA
Mechanical Adjustments

5/VCR - TR - MA - TT
Tape Transport

The two most common problems involve either poor cleaning practices or cassette malfunction. When a tape is placed into a VCR, a switch senses the insertion and triggers motors and mechanisms to grab the cassette, pull it inside and lower it onto the platform. As this happens, the cassette door is released and opened. At the same time a pin unlocks the cassette reels.

When the Play button is pressed, the tape transport removes the tape from the cassette's supply reel and routes the tape though a series of posts and guides which are aligned precisely to put the tape in contact with the erase, video, audio and tracking heads. Movement of the tape is monitored by sensors in the tape transport path which relay the status of the video tape to a microprocessor.

The loading ring controls all of the active transport elements in a VHS recorder. It is responsible for the removal of the tape from the cassette as well as placing the tape in contact with the heads.

As the tape is pulled from the cassette, it comes in contact with a fixed guide post, the supply tension arm, and with an upper and lower positioning flange. The tape continues past the full-erase head and the pressure idler which supplies the tension needed to keep the tape in contact with the guide roller. The last stop before coming in contact with the rotary heads is the input slant-guide post which provides the proper angle of tape to the drum assembly.

On the drum assembly, located on the lower stationary (nonrotating) section, is a precision helical groove. This guides the tape around the drum.

As the tape exits the drum assembly, it passes over the exit slant-guide posts which position the tape for returning to the cassette. On the return travel, the tape passes the linear audio/control head, a fixed take-up guide post, and the capstan drive shaft. The tape is held against the capstan drive shaft by a pinch roller. The capstan pulls the tape through the VCR at a predetermined, constant speed.

When Stop is pressed, and the tape leaves the transport deck, it is pulled back into the cassette by the loading ring. The loading ring is driven by the loading motor, which controls a belt and pulley coupling. A mechanical brake located next to the loading ring applies tension to the loading ring when in the stopped mode. It also serves as a mechanical brake for the supply reel.

5/VCR - TR - VP
Video Processing

5/VCR - TR - VP - C
Color

Color Circuit Operation During Record

Figure 1 shows how the video from the tuner is passed to remove and amplify the chroma signal only. It is then boosted by 6 dB. The automatic chroma control (ACC) circuit then receives the chroma burst signal through. The signal is sent to the chroma control detector circuit.

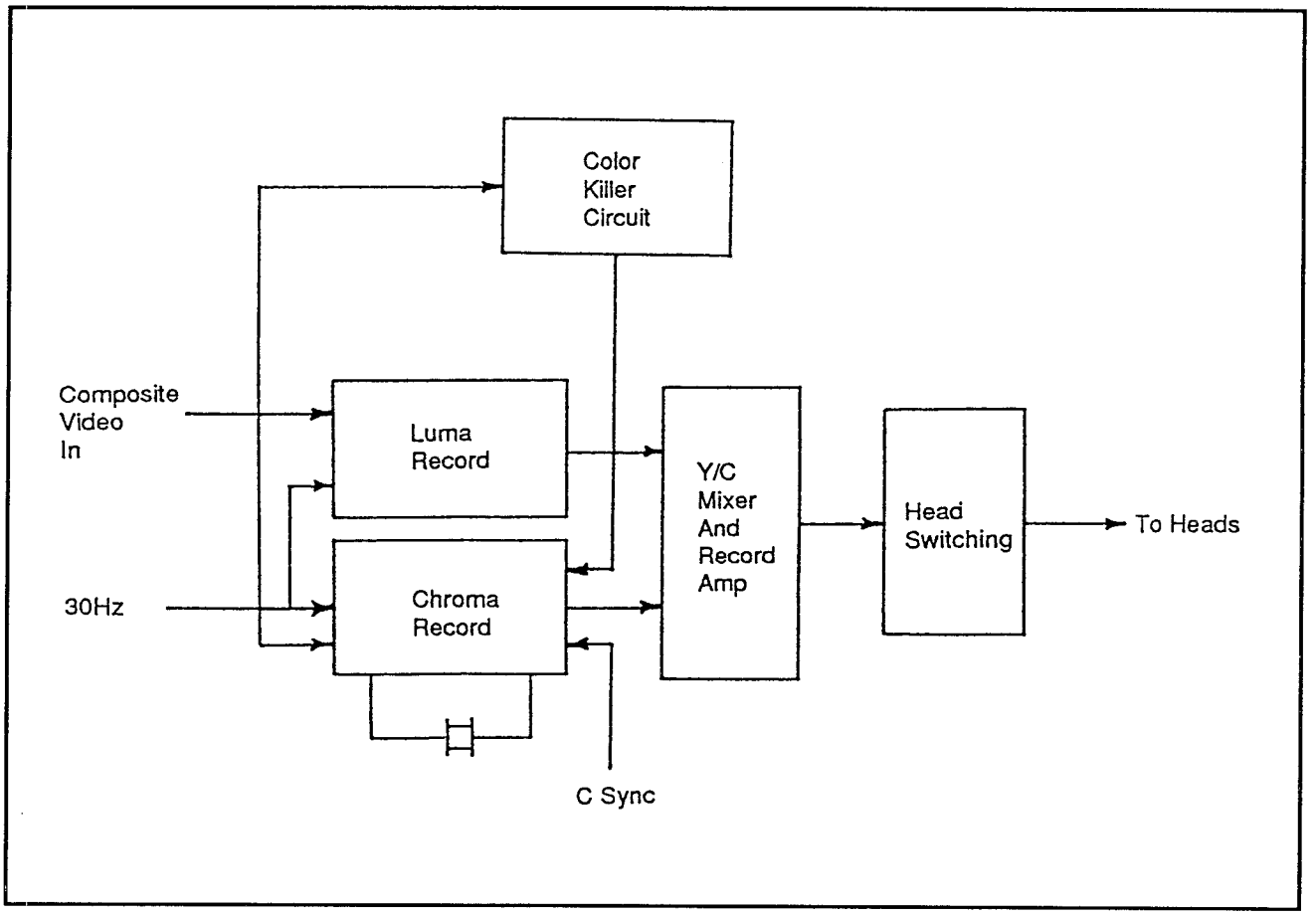

Figure 1: Chroma circuit during record

The peak of the chroma signal is detected and produces a control voltage which is sent to the ACC circuit to maintain the chroma signal at a certain voltage level. The chroma signal is sent to the main converter and mixed with a reference signal, which then produces a 629 kHz for recording on tape with the luminance signal.

The reference signal is created by mixing a 3.58 MHz signal from a variable crystal oscillator (VCO) and a 629 kHz signal. The 629 kHz signal is reversed ±90° every single horizontal period (1H). When all the aforementioned signals are combined, they produce a 4.2 MHz signal that is passed through a bandpass filter to the main converter where it is combined with the 3.58 MHz chroma signal to produce 629 kHz. The combined signal is then fed to the record amplifier.

Color Killer Circuit

Figure 2 shows the color killer circuit. It is designed to prevent the passing of a color signal when the signal is black and white only. It also provides an ID pulse, which is used in the AFC circuit to prevent a 180° out-of-phase lockup.

During black and white operation there is no 3.58 MHz color burst signal so the phase detector color killer only sees the luminance signal. When this happens, the passage of color signals is prevented.

During color operation the 3.58 MHz color burst is sent through the burst gating circuit, along with a reference 3.58 MHz signal, to the phase detector killer. The signals are compared, and if they match, the output allows the color signal to pass. The color burst is exactly 180° out of phase with the reference 3.58 MHz signal.

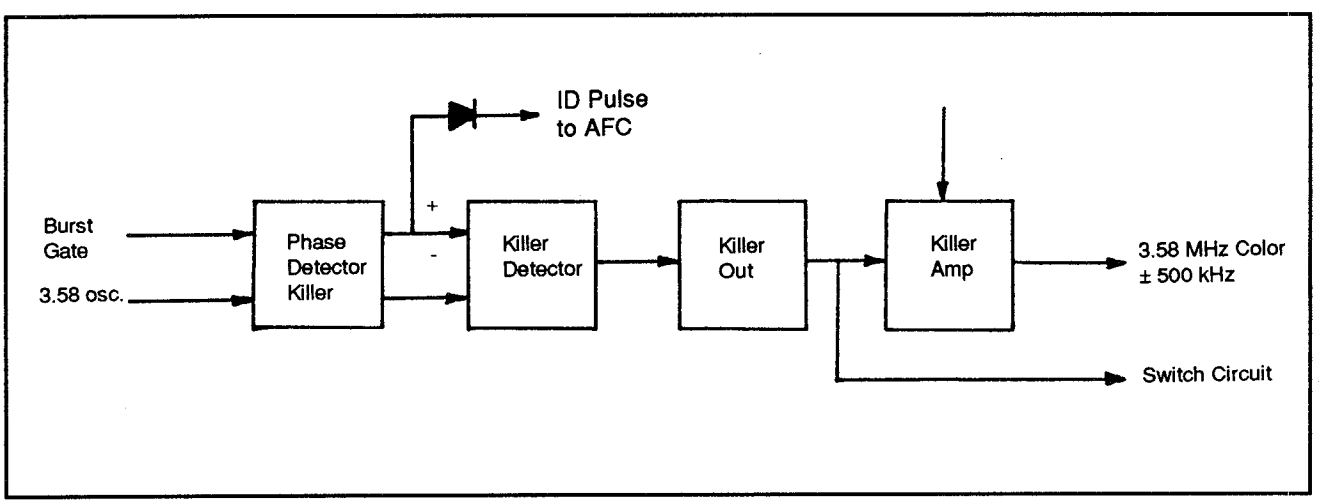

Figure 2: Typical color killer circuit

5/VCR - TR - VP
Video Processing

5/VCR - TR - VP - FPC
Frequency and Pulse Control (Automatic)

AFC

Figure 1 shows a block diagram of the typical AFC circuits in a VCR. AFC works similarly in record and playback. It uses H-sync pulses in the video signal from the tuner during record. During playback the H-sync signals on the tape are used.

There are five inputs to the one output of an AFC circuit. Inputs are the video H-sync pulses, a 30 Hz cylinder signal from the servo, a 3.58 MHz fixed or phase corrected signal from the variable crystal oscillator (VXO) in the automatic phase control (APC) circuits, a color burst ID pulse from the APC and a dropout pulse from the DOC circuit.

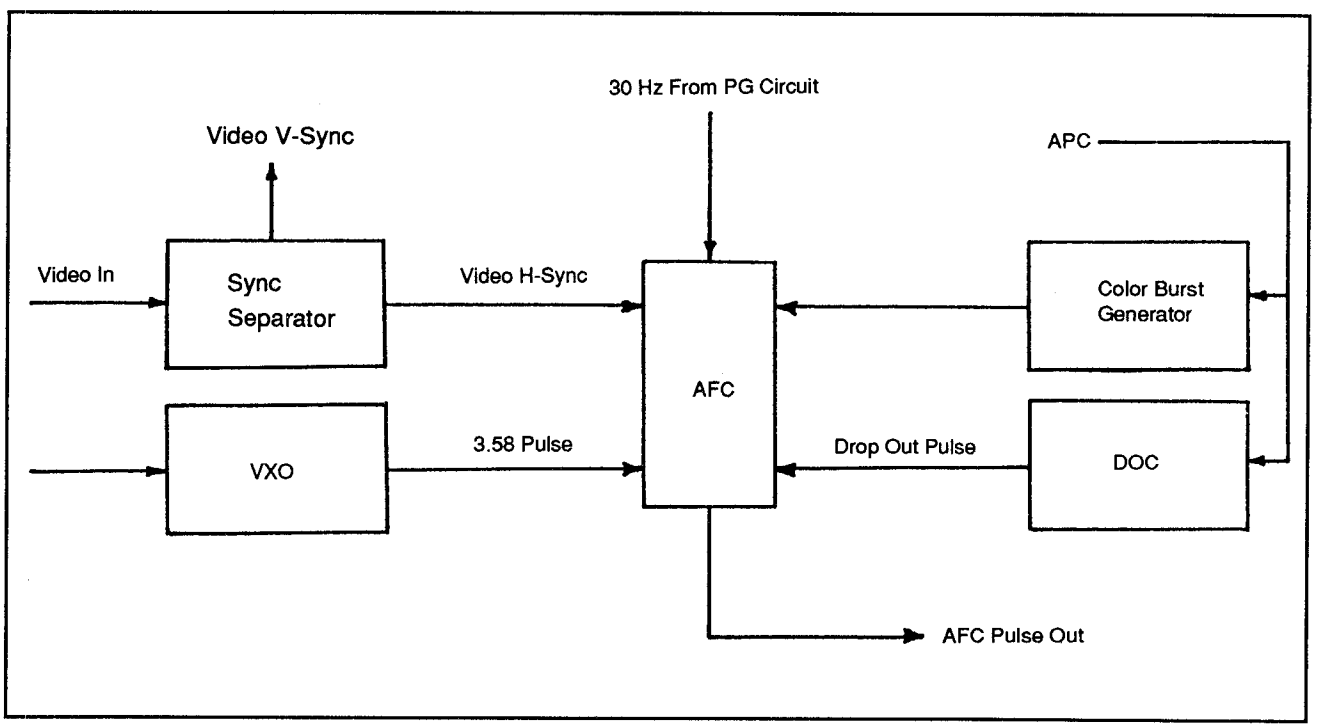

Figure 1: Automatic frequency control circuit

The video signal is split into separate vertical and horizontal sync. The H-sync (fH) signal is shaped into a 2µs pulse by a horizontal drive circuit, and also sent to an AND gate. The second AND gate is kept normally high so the 2 µs fH pulse can pass. If a dropout occurs, the AND gate goes low and the fH signal cannot pass. The AFC also receives a horizontal prime (fH') signal created by a 2.5 MHz VCO.

The 2.5 MHz signal is 160 times the H-sync frequency. The signal is divided into 4 equal 629 kHz signals through a 1/4 90° shift and switch circuit operated

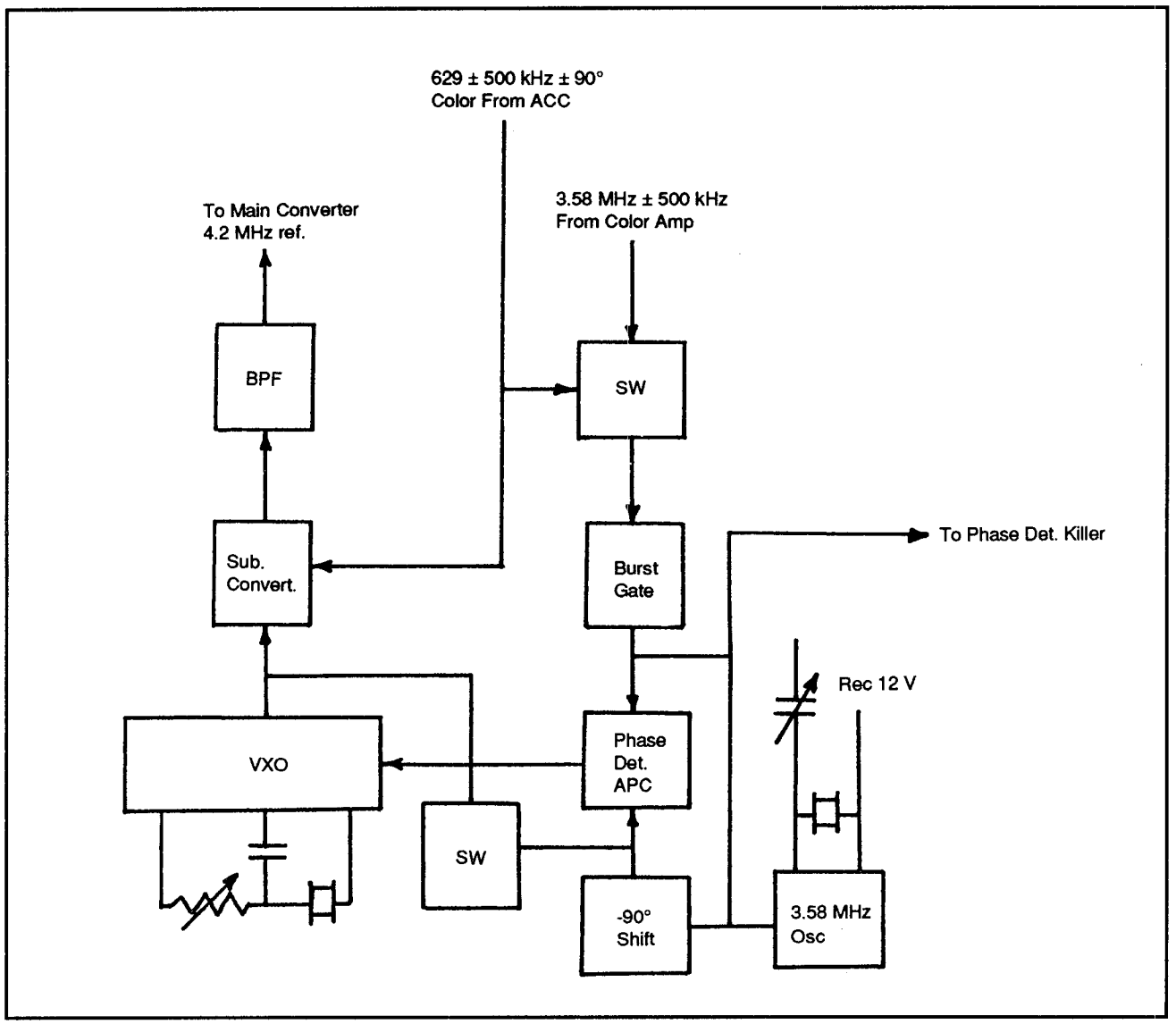

Figure 2: Automatic pulse control circuit

by a 4 bit counter. The output is then divided to 1/10 or 6.29 kHz and by 1/4 of this or 15.625 kHz. If there is any difference between the fH signal from the AND gate and the fH' signal originating at the VCO, the VCO is shifted in frequency by an error correction voltage created in the AFC circuit. This locks the VCO precisely on the horizontal sync frequency.

The 4-bit counter produces switch signals that select each of four signals in order from the 1/4 90° shift circuit. Each of the four signals is shifted 90° from the prior signal. Channel 1 is advanced in phase by 90° but channel 2 signals are delayed in phase by 90°.

APC

Figure 2 shows a typical automatic pulse control (APC) circuit. This circuit will correct any phase differences between the reference 3.58 MHz signal from the VXO and the incoming signal 3.58 MHz.

5/VCR
Video Recorder

5/VCR - TR	Troubleshooting and Repair
5/VCR - TR - VP	Video Processing
5/VCR - TR - VP - FPC	Frequency and Pulse Control (Automatic)

5/VCR - TR - VP
Video Processing

5/VCR - TR - VP - LC
Luminance Circuit

Basic Function

A typical luminance circuit is shown in Figure 1, in the article "Phase Inversion", *(5/VCR - TR - VP - PI)*. The video signal from the video input is sent to the preamps. Each channel is amplified to remove any overlapping signal and sent to the video amplifier and color circuits. The signal is reduced to the luminance signal only by passing through a 3.58 MHz trap. The pure video signal is amplified and fed to the nonlinear emphasis circuit which emphasizes the luminance signal frequencies by different amounts depending on the record mode.

The output of the nonlinear emphasis circuit is then adjusted to a proper FM modulated level (4 and 6 hour record modes only). The signal is then amplified by the video amplifier and sent to a clamp where the DC voltage of the video sync tip remains constant. This maintains a sync tip of 3.4 MHz.

Next, the clamped signal passes to the pre-emphasis network where the high frequency spectrum is emphasized to improve the S/N ratio. (This reduces noise.) The signal is then processed by the white and dark clip circuits. The white and dark clip circuits reduce the possibility of overshooting a specific level. The signal leaves the white and dark clip circuits and is applied to the FM modulator (which operates at 4.4 MHz for white peaks and at 3.4 MHz for sync tips). There are also 30 Hz pulses being received from the FM carrier interleaving circuits.

The FM luminance signal is amplified and attenuated to reduce the lower end of the FM so it does not interfere with the 629 kHz chroma signal. The signal then passes through the squelch circuit (which prevents accidental record during a tape load function), and is amplified and combined with the chroma signal. The combined signal is sent to the video heads via the rotary transformers.

Luminance Circuit During Playback

A typical luminance circuit during playback is shown in Figure 1. The reproduced signal is sent to the preamps from the rotary transformers. Each channel is amplified to remove any overlapping signal and sent to the video amplifier and color circuits. It is then sent to a drop out compensator (DOC) circuit. The DOC prevents picture deterioration by supplying a preceding signal if the FM signal

is partially missing. It also sends a pulse to the automatic frequency control (AFC) circuits.

The FM signal is fed to a high-pass filter, first limiter, low-pass filter, mixer, and second limiter, which removes the AM from the FM signal. It is then fed to the demodulation circuit. The demodulated signal is amplified and impedance is matched. The video signal is deemphasized by the deemphasis circuit. Then an edge noise canceller removes any noise, and the video signal is sent to a compensator circuit.

The signal is transmitted through the noise canceller circuit, which cuts down any noise in the video signal. The luminance (Y) and chroma (C) signals are processed in the Y/C mixer and then sent to the E-E/V-V switch through the clamp mute circuit. Output from the E-E/V-V signal is sent to the RF modulator which will produce the NTSC signal on the selected channel.

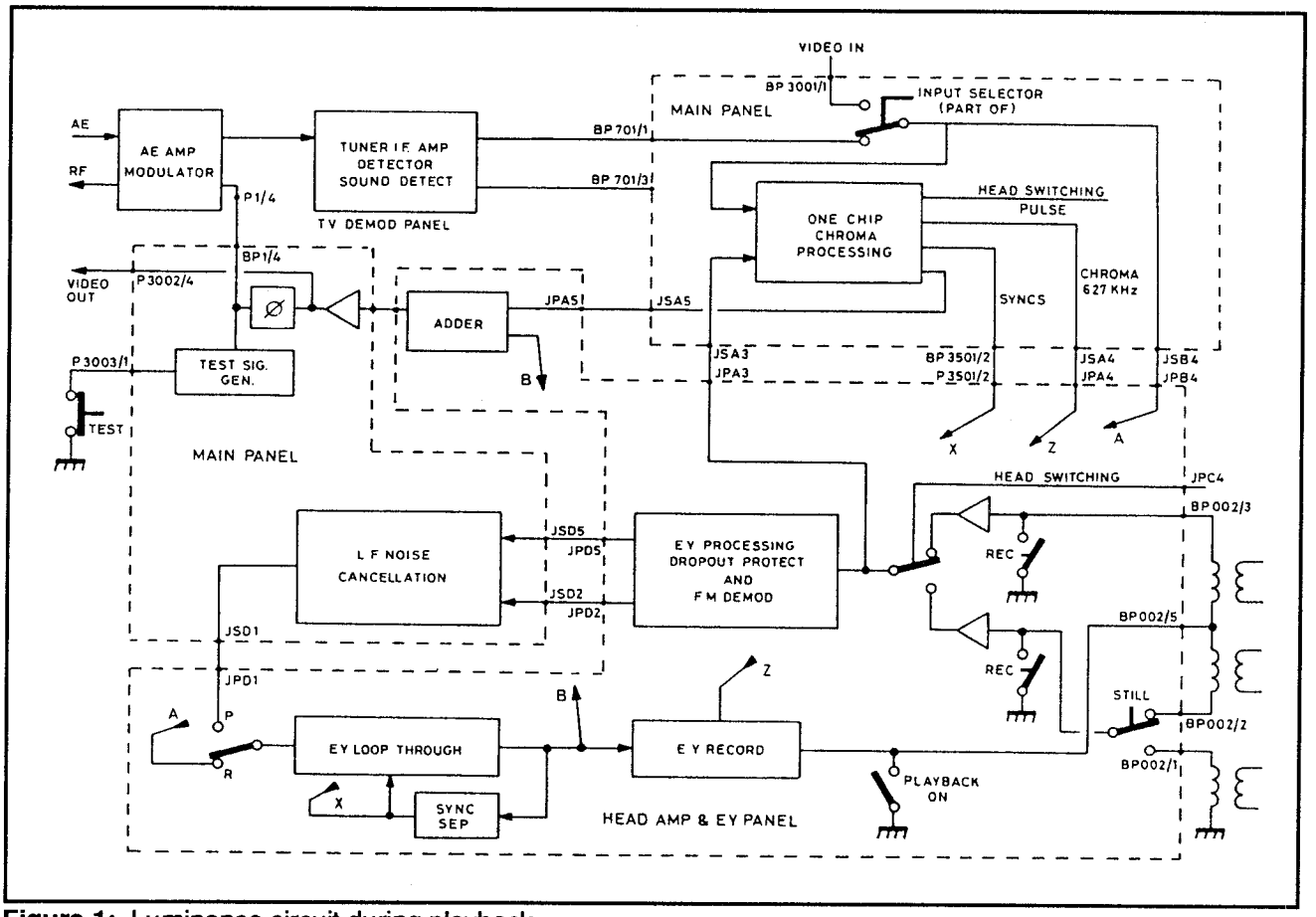

Figure 1: Luminance circuit during playback

5/VCR - TR - VP
Video Processing

5/VCR - TR - VP - PI
Phase Inversion

Phase inversion is used to minimize crosstalk. This happens mainly in the chroma channel which tends to crosstalk more than other channels.

The chroma signal recorded on the A track (tracks alternate A and B) is phase-inverted by 90° with each line period (1H). The B channel is recorded in reverse phase of the A channel (or opposite phase direction). During playback, the A and B channels are restored to the same phase. Figure 1 shows how the chroma signal is recorded using phase inversion.

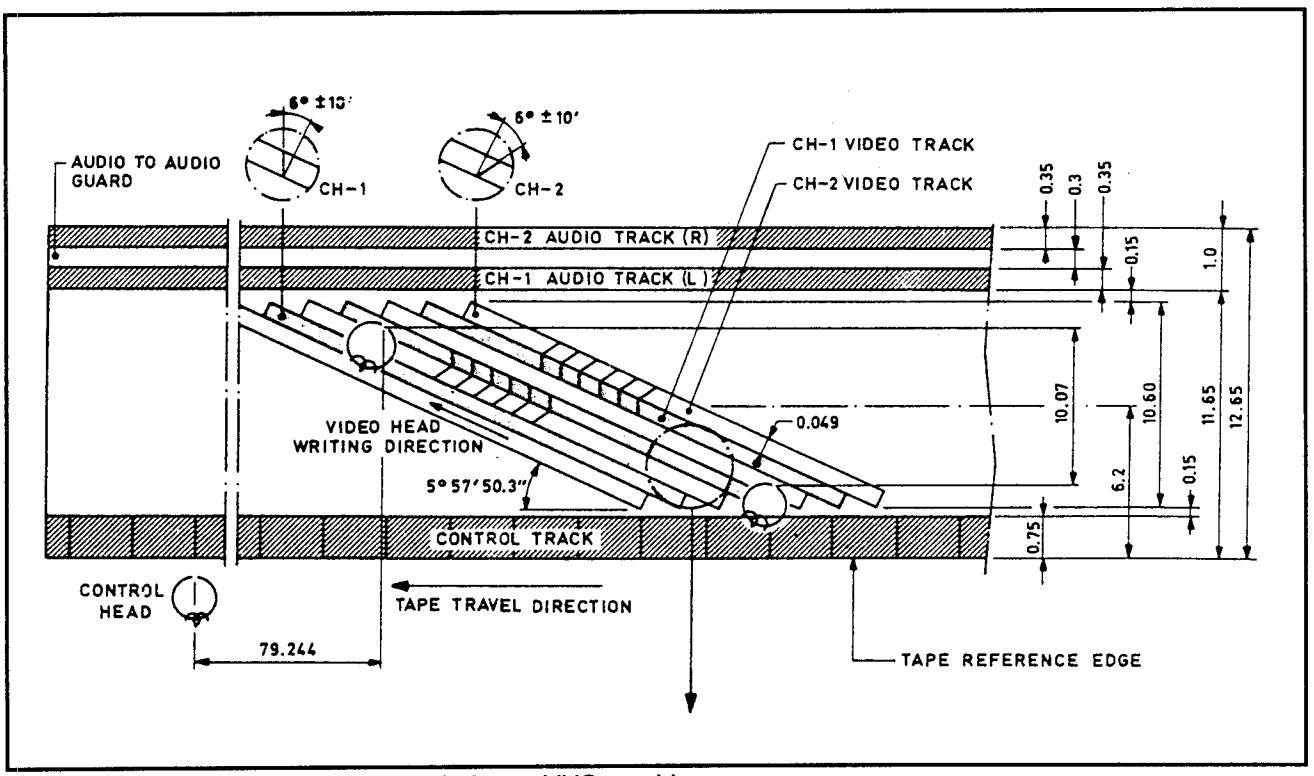

Figure 1: Phase inversion as recorded on a VHS machine

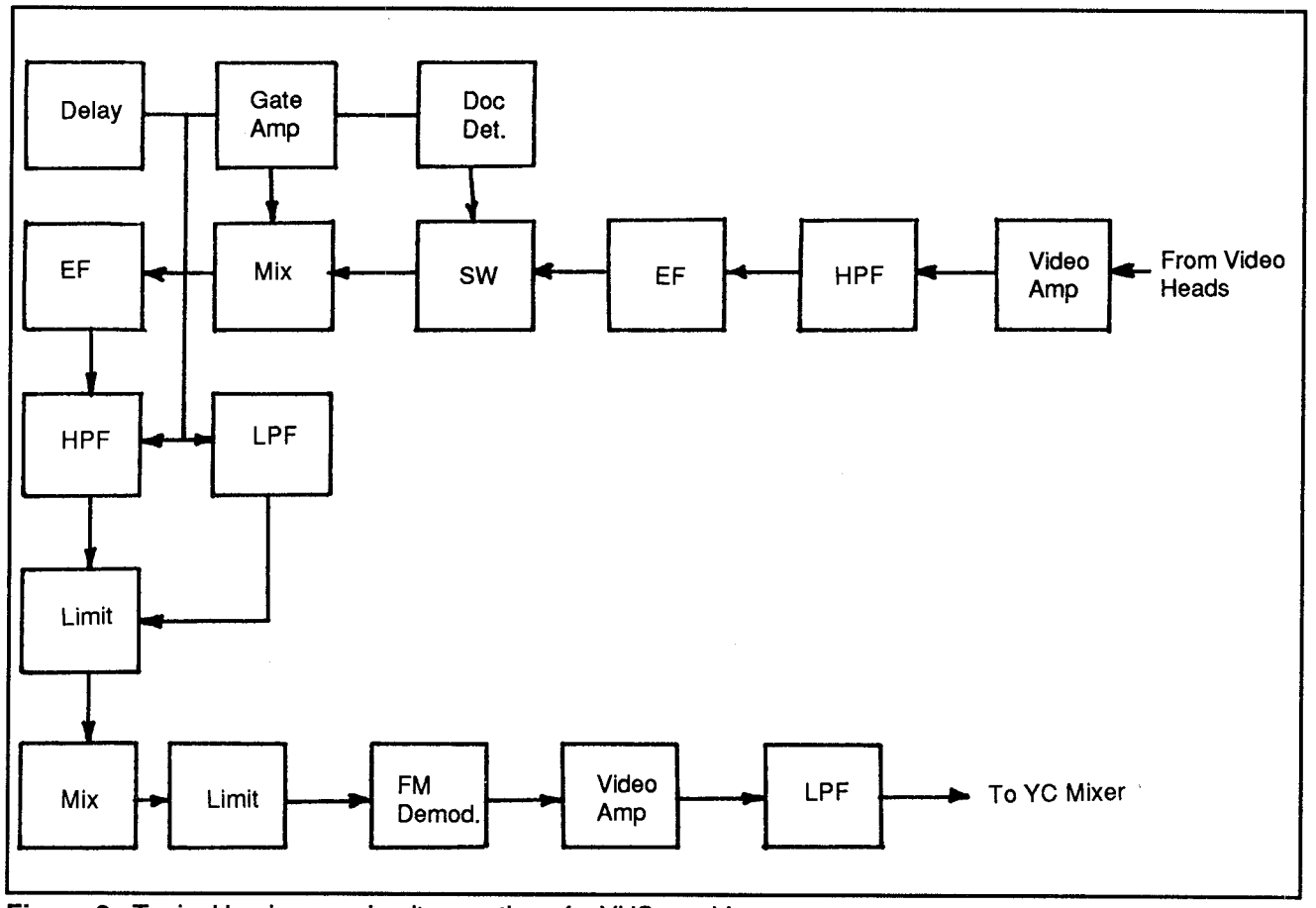

Figure 2: Typical luminance circuit operation of a VHS machine

5/VCR - TR - VP
Video Processing

5/VCR - TR - VP - R
Recording

Most problems in a VCR are mechanical. In most cases, if there is a video problem, replacing the whole circuit board is far easier and less costly than trying to search for the problem on a component level. To even attempt this you will need the service manual for the specific VCR. You will also need the test equipment detailed in Section *"5/VCR - TE"*, including a known, good test tape.

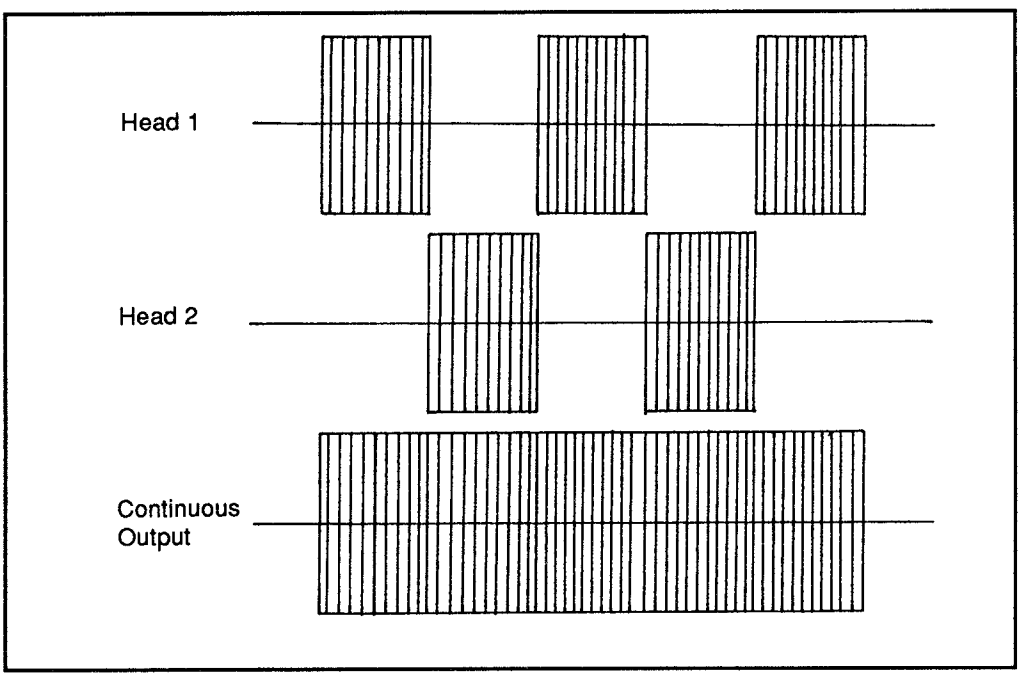

Figure 1: Recording pattern of shifted information

VCRs use high-density recording to get the most program information on a given amount of tape. VHS recorders use a ±6° azimuth difference or a 12° difference between video heads. Azimuth recording and phase inversion are used to cut down on the amount of crosstalk. The chroma (color) of a typical VHS system

is recorded at 629 kHz. This is produced by mixing the incoming 3.58 MHz chroma signal with a 4.2 MHz reference signal and then phase-inverting and locking the incoming horizontal signal. (The 629 kHz is 40 times the horizontal signal at 15,734.26 Hz.)

The signal is placed on videotape via the heads in video head assembly. As the heads spin, the signal is placed on the tape in increments of 90° at each successive horizontal line. After four lines the 629 kHz signal is back to the original phase.

The pattern used in recording the shifted information is shown in Figure 1. When the reference signal of 4.2 MHz is played back, it is phase-inverted and mixed with the 629 kHz signal to restore the original 3.58 MHz chroma signal.

The playback 629 kHz and reference 4.2 MHz signals are phase-shifted in the same direction, mixed, and output as a 3.58 MHz signal at normal phase.

5/VCR - VCS
Various Case Studies

5/VCR - VCS - FiFVH722
Fisher Model FVH-722

Freeing a Jammed Tape and Restoring VCR Video Quality

This case study points out that a repair procedure may involve solving more than one problem. This was the case with a Fisher FVH-722 Video Cassette Recorder that was brought into the shop. The unit arrived in poor physical condition, showing that it had taken some abuse. The VCR was dusty, though unscratched, on the outside cover; the 75 Ω coaxial antenna terminals at the rear were smashed in; the play and stop buttons were missing; and the front panel cover was broken.

The customer complained that the VCR had slowly, over time, lost video quality during both playback and record. He also told us that he had dropped the VCR, damaging the rear antenna connectors. This resulted in the loss of the output signal completely. A tape had been loaded in the machine when the fall occurred, and was still jammed inside. Finally, the machine was turning off automatically about three seconds after being turned on.

RF Modulator Damaged

We suspected that the RF modulator was damaged since the loss of signal occurred after the VCR was dropped. We were not sure what was causing the gradual loss of video quality, but we planned to check the condition of the video heads, alignment, and accompanying circuitry.

Initial Repair Procedures

We attached the VCR to a TV and applied power to the VCR to verify the customer's complaints. Normally, you would insert a test tape (one that will not be missed if it is destroyed) and try all features including play, fast forward and rewind. However, in this case, the customer's tape was jammed in the machine.

When we turned the power on, we could hear the sound of a motor spinning inside the VCR. Then it shut off. No output signal appeared during the few seconds the VCR was on.

Remove Cover

Next we unplugged the unit, removed four screws, and lifted off the top cover of the VCR. We inspected the top portion of the unit (see Figure 1), looking for any burnt components or defective belts. We again applied power and watched the actions of the cassette mechanism. At the same time we located various electrical and mechanical sections of the VCR by reading the silkscreen on the printed circuit boards.

Loose Belt

We suspected that a belt had fallen off or become loose. From the sound of things it appeared that after turning the unit on a motor was energized to perform some function. If a belt were defective, the expected operation would not occur and, after a few seconds, the VCR's microprocessor would react to the problem and shut off the machine. We observed the cassette mechanism, but nothing mechanical moved. The spinning motor sounded like it was located on the underside of the VCR.

We placed the VCR on its side and removed eight screws and the bottom plate

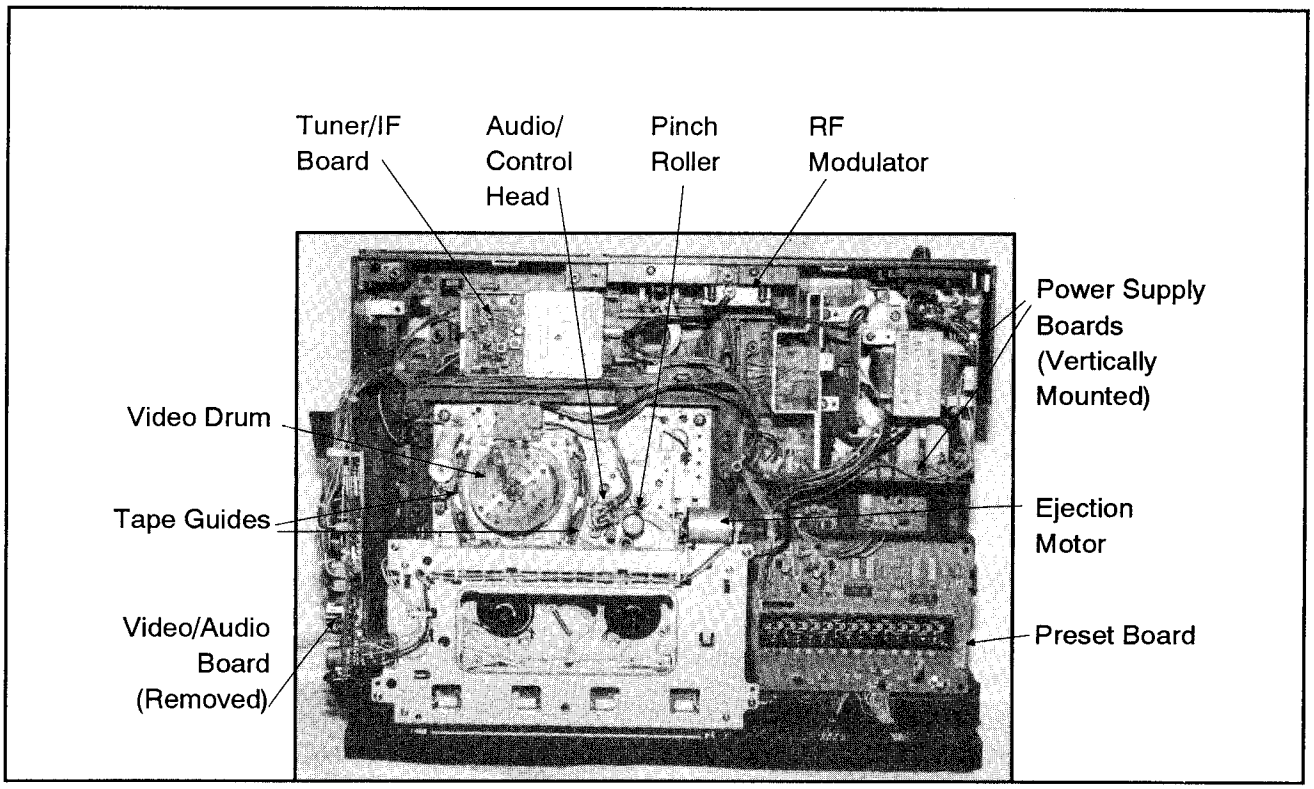

Figure 1: Top view of VCR with cover removed.

(see Figure 2). Again, we observed all circuits and mechanisms, trying to locate all sections on the bottom side. We located and observed the spinning motor. Upon closer investigation, we could see that the belt attached to the motor was slipping badly. It appeared to be stretched and dried out.

Remove Defective Belt

We removed the defective belt and replaced it with a new belt of correct size. (Don't use a rubber band because they lose their elasticity too quickly.) We turned the VCR on again. The motor spun for a second and then stopped, and the unit stayed on. At this point we easily ejected the jammed cassette and the TAPE IN indicator light turned off.

Determining the Cause of the Missing Video

Now that the VCR stayed on, the next problem could be attacked. The VCR did not output a signal from the RF modulator to channel 3 or 4 on a TV. To find out

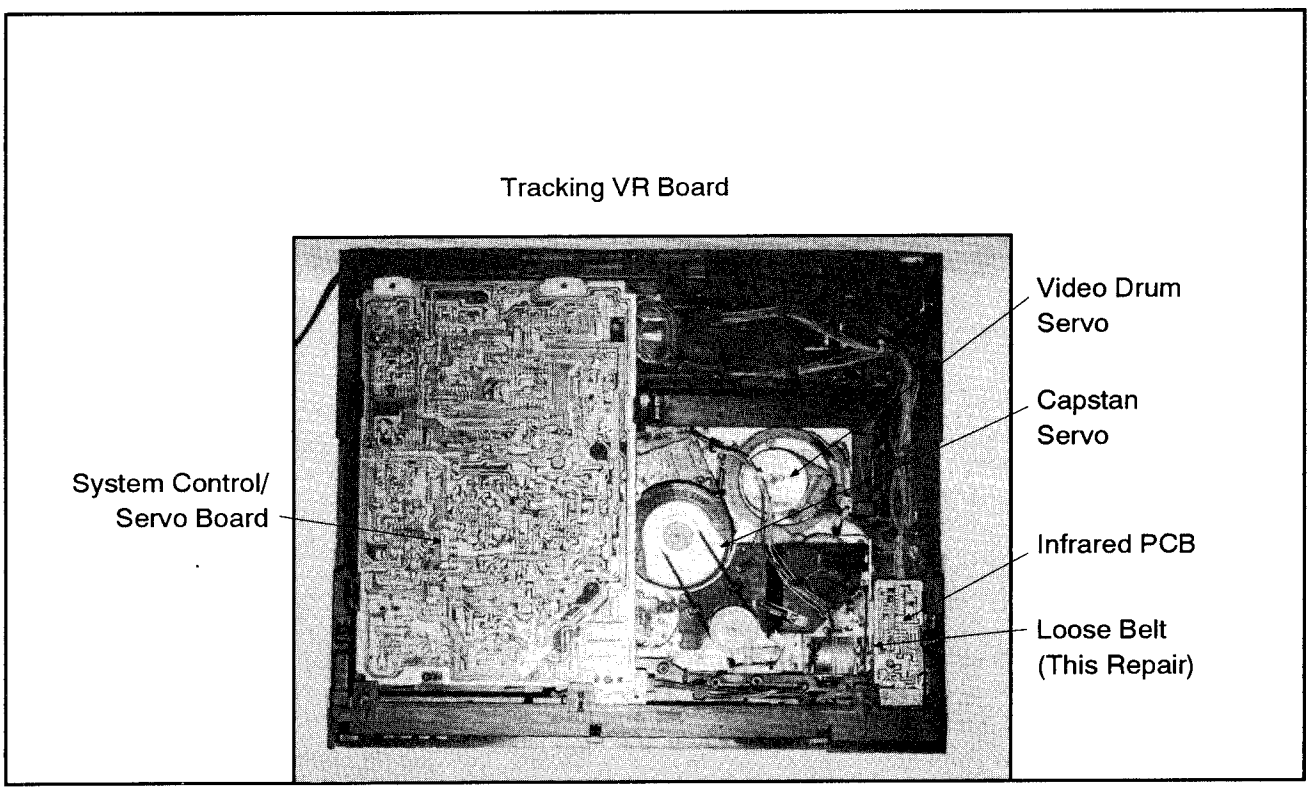

Figure 2: Bottom view of VCR with bottom plate removed.

The VCR shows some abuse, probably from being dropped; the front door is broken off and the play and stop buttons are missing.	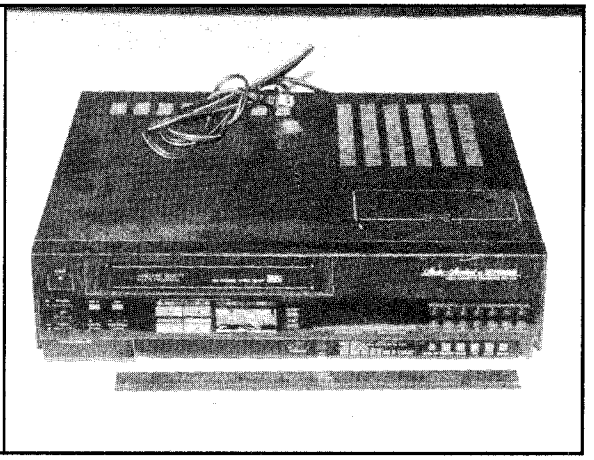
Taking the VCR cover off after removing two screws on each side.	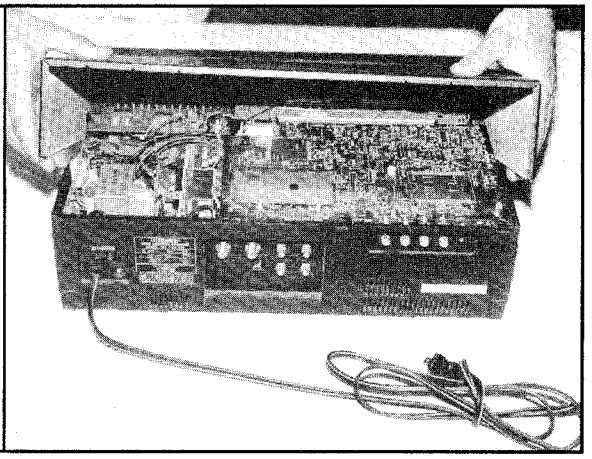
Taking off the bottom plate after removing eight screws.	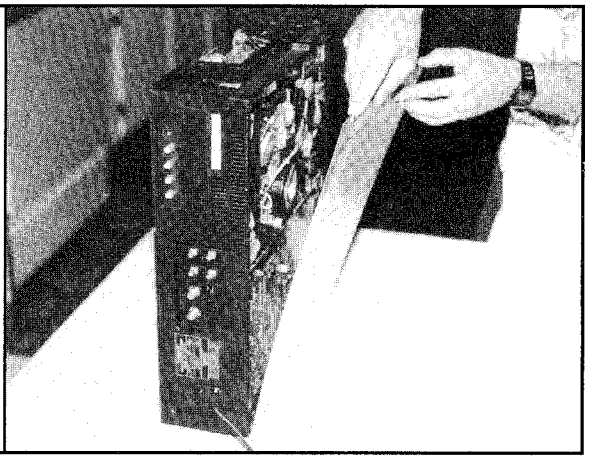

Replacing a loose belt that caused the VCR to turn off after approximately three seconds.

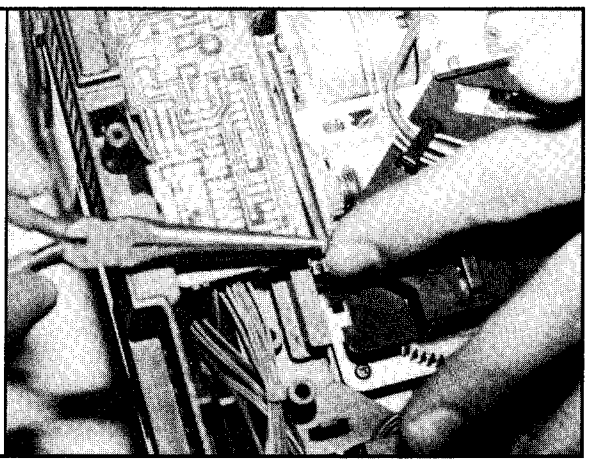

Removing the RF modulator, which was damaged when the VCR was dropped.

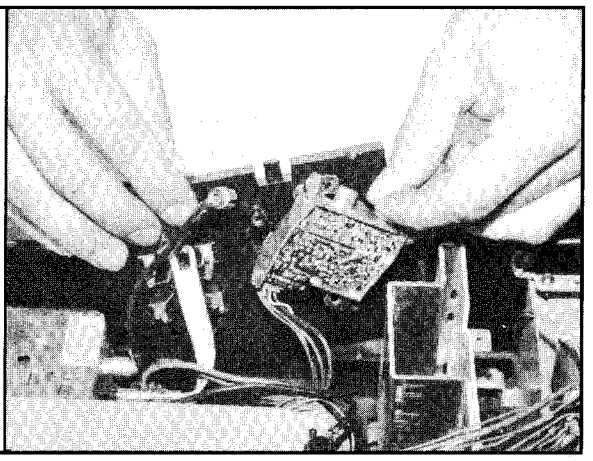

Measuring the voltage on the power supply connector to the modulator; notice that no voltage is present.

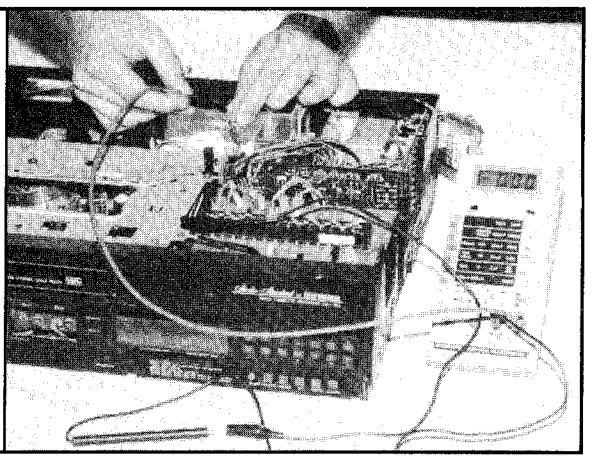

(continued)

Desoldering the defective power supply transistor using a soldering gun and a desoldering tool.

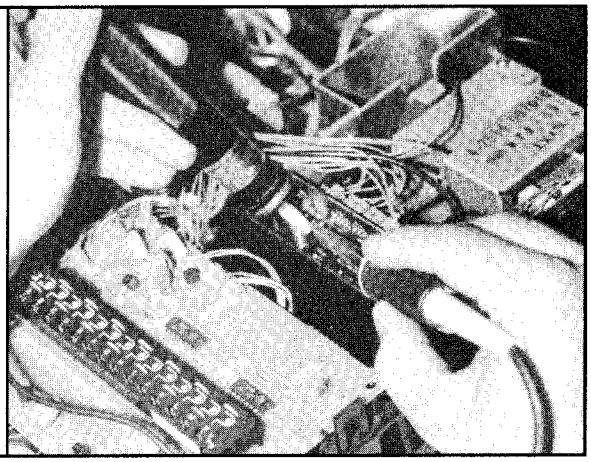

Removing the protective shield that covers the video, audio, and erase heads, as well as other components that come in contact with the tape; the shield was extremely dusty, indicating that the unit needed a good cleaning.

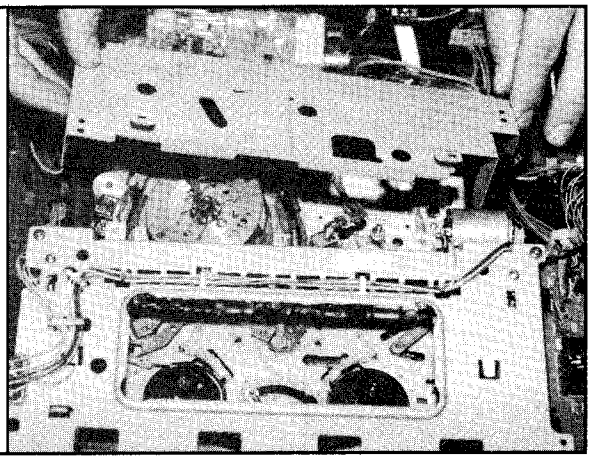

Cleaning the video drum with a chamois stick.

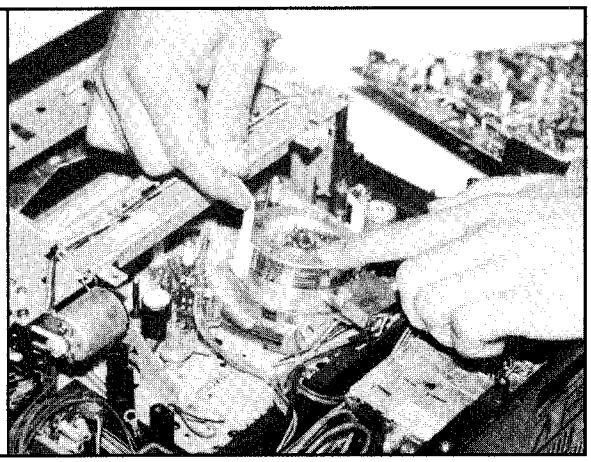

more about the problem, we attached the video and audio outputs on the rear of the VCR to the TV's video inputs via a cable with RCA connectors.

Since the VCR had been physically damaged, we suspected the modulator to be defective. However, we needed a way to verify if the audio/video board had blown out, too, due to the damaged modulator. The VCR's RCA output jacks usually originate directly from the video board inside the unit. From there, the signal is sent to the RF modulator to be modulated to either channel 3 or 4. If the signals are good at the RCA ouputs, but bad at the output of the 75 Ω antenna connections, the modulator is usually defective. Sure enough, we found that the picture and sound were beautiful from all channels. This showed that the output from the video board was good.

Now we had to remove the old modulator (see Figure 3) and replace it with a different one. We happened to have an exact replacement modulator from another Fisher VCR that we use for parts. One can usually be purchased, though, in a VCR repair center for around $25.

Remove Modulator

After replacing the modulator and powering up, we were dismayed to find that the VCR still did not produce and RF output signal. We were sure, though, that the replacement modulator was operational since it worked in the VCR that it came from.

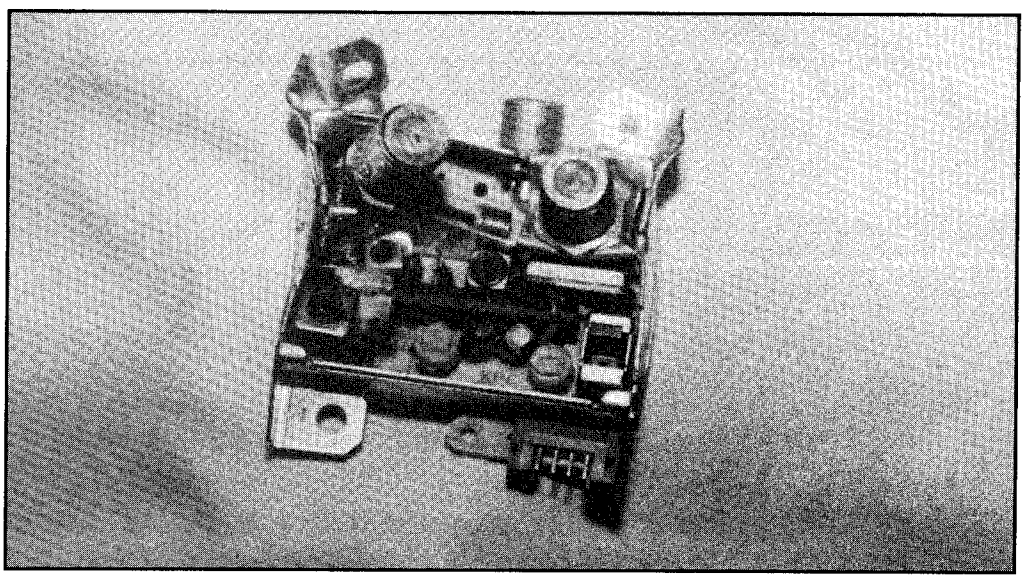

Figure 3: The damaged modulator, after removal.

We were left with two choices: 1) Either the modulator is not receiving the video and audio signals from the video/audio board, or 2) the modulator is not receiving power from power supply. We removed the modulator again and looked at the connector. It has six wires: two 20 gauge wires, one red and one blue, and two shielded wires. We could only assume that one shielded wire contained the video signal and one contained the audio signal. (Low-level signals such as these are almost always carried via shielded wires.) This left the red and blue 20 gauge wires, which had to be power (see Figure 4).

Measure Voltage

Using a DMM to measure the voltages, we attached the negative lead to a grounded part of the chassis and carefully used a small probe to measure the voltage on each power pin. The DMM measured 0 V on both. This meant that the modulator was not receiving power.

Troubleshooting the Power Supply

We followed the blue and red wires back to the power supply, and realized that it would be necessary to troubleshoot the board. On the printed circuit board, the trace attached to the blue wire led to the chassis ground. The trace attached to the red wire, however, went to the collector of transistor Q901 (silkscreened on the board). This made sense, since the modulator would receive a ground along with an operating voltage.

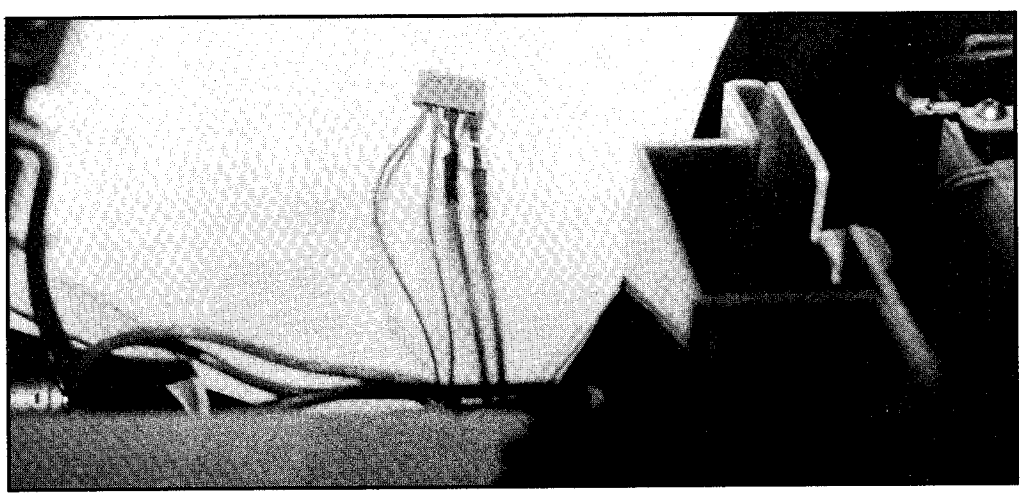

Figure 4: The modulator connector wires from left to right are +12 V (red), ground (blue), and shielded audio and video input wires from the audio/video board.

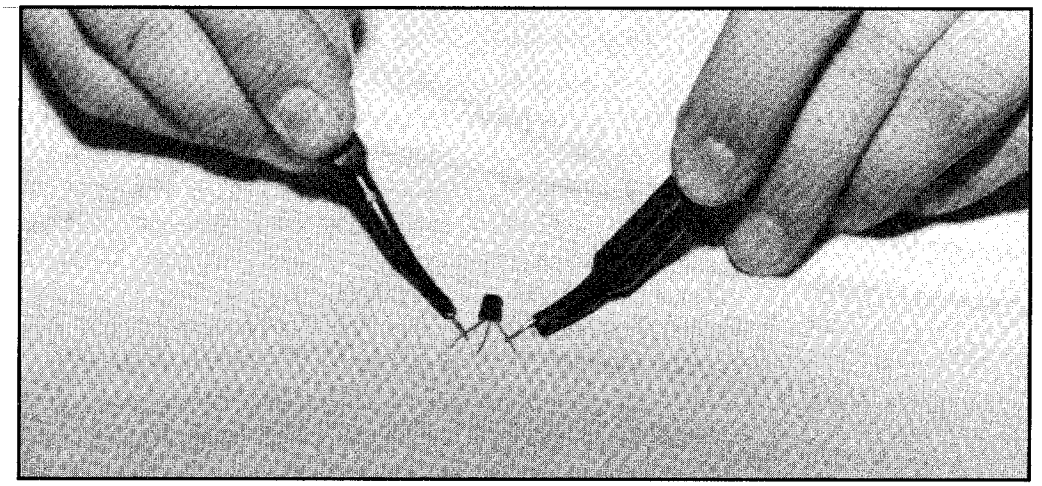

Figure 5: Testing the resistance between the emitter and collector of a transistor with a DMM.

Check Transistor

We removed the transistor and read the number. We noticed that the number was 2SA953. Realizing that all 2SA transistors are PNP, we tested accordingly (see Figure 5). If the transistor were to prove operational, additional traces on the board would have to be followed until the problem was solved. If this had been the case, it might have been necessary to purchase a service manual. Luckily, the transistor tested open from collector to emitter in both directions. It was likely that this was causing the problem of supplying power to the modulator.

Replace Transistor

We replaced the transistor with an equivalent, reattached the modulator connector, and applied power to unit. When turned on, the TV screen showed a picture. Another problem solved. Just for curiosity, we took another look at the old modulator. We wondered what would cause the power supply transistor to blow out. We measured the resistance between pins 1 and 2 on the old modulator (the power supply input pins). The resistance measured 0 Ω — a direct short. Upon further inspection, we noticed that the metal case surrounding the circuitry was pressed against the input connector causing the short. This damage occurred because of the fall. The short must have drawn excessive current from the transistor, thus destroying it.

We secured the modulator and power supply boards back into the VCR. We tested all the channels to ensure complete operation of the tuning circuitry. Everything checked out okay. Now it was time to attack the next problem — poor video quality.

Troubleshooting the VCR's Poor Video Quality

We removed the metal dust cover protecting the video heads to expose the entire cassette mechanism. We installed a test tape and tried rewinding, fast-forwarding and playing. We paid close attention to any unusual noises or mechanical movements within the cassette mechanism, and observed the quality of audio and video during playback. During rewind and fast-forward, we paid attention to how quickly the video cassette stopped when the stop button was depressed. Both reels should stop instantly. If any additional spin occurs from inertia, suspect defective brakes. When you are troubleshooting video quality, you should use test tapes pre-recorded at different speeds (SP, LP and EP), since different circuits control each speed and therefore different problems may surface. Also, you should inspect the video heads, the audio/control head and all guides for dirt, dust, and so forth.

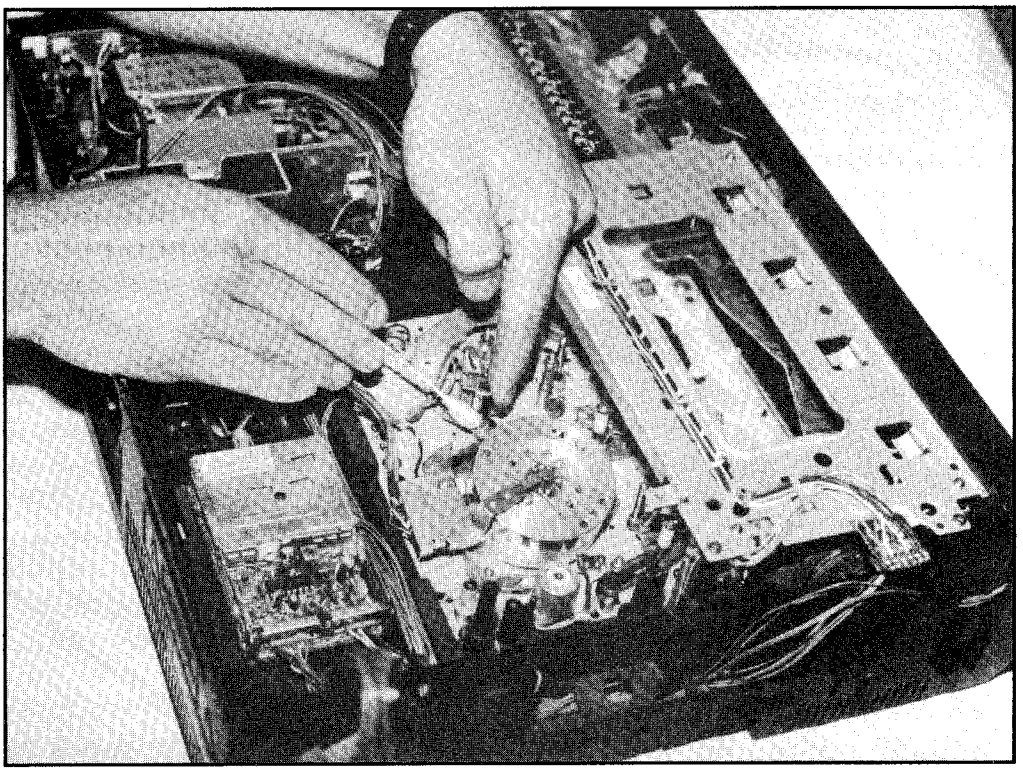

Figure 6: Cleaning the audio/control head with a foam swab dipped in head cleaning solution.

Oxide Buildup

We could see that the VCR's video output was very poor; static filled most of the screen. Upon inspection, we noticed that the video drum was completely fogged with some sort of gray dust. Both head chips (this is a 2-head VCR) were clogged with oxides. It was at this point that we realized what had happened. Throughout the repair process, we were bothered by an odor emanating from the VCR. We realized now that it was cigarette smoke. The whole VCR was immersed in this coating of cigarette smoke residue. This would explain the slow disintegration of quality, as the residue built up.

Clean Heads

Before beginning to troubleshoot any video problem, it is wise to clean the heads. The buildup was so bad that we used a toothbrush to carefully clean the two head chips. We also used a foam swab, as shown in Figure 6. (See section 5/VCR - M of the *Electronics Repair Manual* for information on how to clean heads.) Also, we demagnetized the heads and cleaned all other parts that came in contact with the tape. This is all routine maintenance that should be performed with any VCR repair. After a complete cleaning, we played the tape again and observed the quality.

In this case, the amount of dirt on the video heads was probably the only reason for such poor video output. It is surprising just how much damage oxide buildup can do to a VCR. After a thorough cleaning, the VCR played beautifully. Both audio and video were reproduced perfectly.

We finished up by performing a complete test on the VCR, checking all cassette functions as well as tuning functions. After everything checked okay, we reassembled the unit.

Conclusion

VCR repairs such as this one can have more than one problem. It takes experience and a little common sense to determine which problem to attack first. Obviously, before attempting to fix any other problems, the VCR must remain on. This forced repair of the belt first. VCR repairs are usually very hard or very easy. The easy ones usually just require a cleaning, belt changes, alignment and/or lubrication. The more difficult ones have microprocessor or power supply problems.

Notice that no oscilloscope or special equipment was needed to perform this repair. Most people believe that VCR repairs cannot be done without scopes, NTSC bar generators, and so forth. This is true only for the more difficult problems.

Also realize that we did not use a service manual for this particular repair. Always try to fix a VCR (or other piece of electronic equipment) by using a basic knowledge of electronics before spending $15 or so to purchase a service manual. The flow charts that follow outline this particular repair problem and also suggest directions to take for other scenarios. — *Dana DeMeo*

Troubleshooting Flowcharts

Problem: VCR turns off after three seconds; won't eject tape.

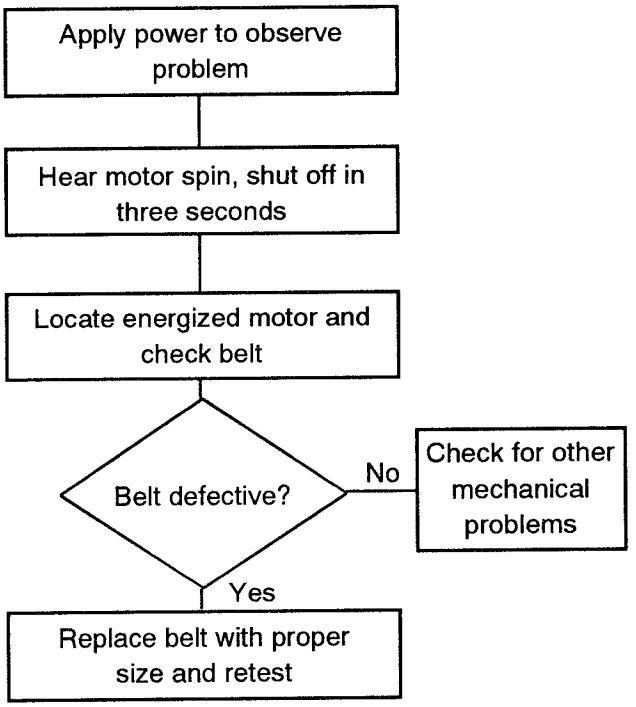

Conclusion: Belt replacement allowed the unit to remain on and eject the tape.

Problem: VCR shows no video or audio output on 75 Ω coax connector.

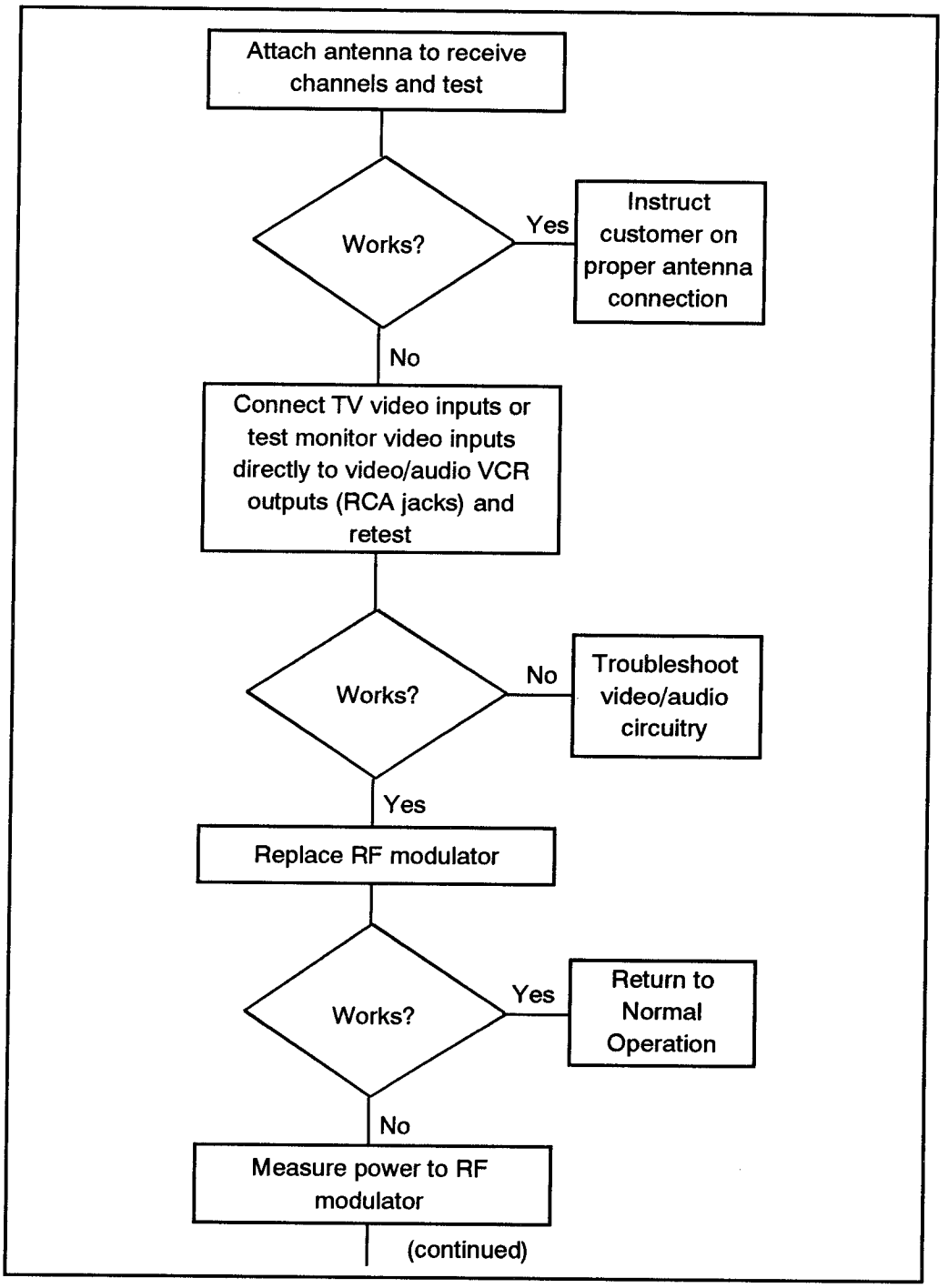

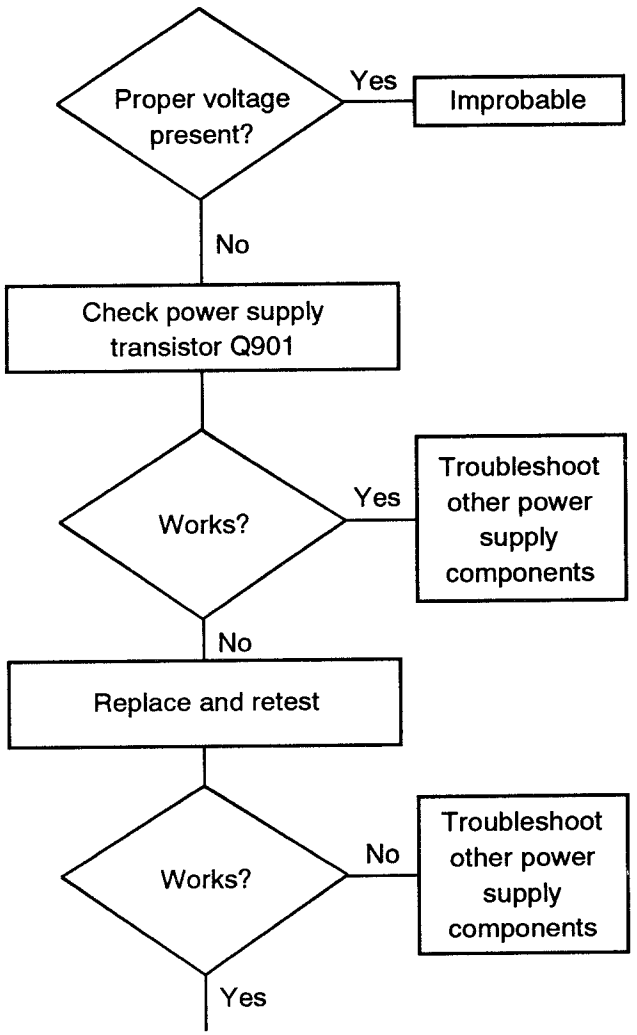

Conclusion: Voltage returned to modulator (+12 V) and the VCR video returned to normal operation.

Problem: Poor video/audio on playback and record

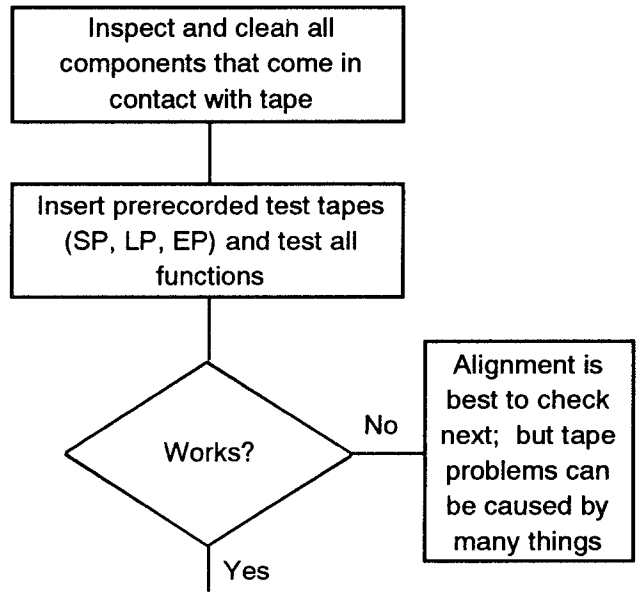

Conclusion: VCR needed a thorough cleaning.

5/VCR - VCS
Various Case Studies

5/VCR - VCS - PanPVS4764
Panasonic PV-S4764

Repairing a Jammed VCR

In this case study of a Panasonic PV-S4764 VCR, the problem is caused by abuse. When the customer brought his VCR into the shop it was scratched and dusty and a tape was visibly jammed inside. The customer said he had tried to put a tape into the VCR. When the machine did not accept it, he forced it in anyway. The tape went half way in and jammed. He said he heard something snap.We suspected that damage had occurred to the loading mechanism, probably a broken gear or piece of housing.

Repair Procedures

As the first step in the repair we applied power to the unit to verify the customer's complaints. We wanted to see if the unit would even turn on. We also attempted to eject the tape.

Jammed Tape

When plugged in, the clock immediately began to flash. The VCR did turn on but there was no response to pushing the eject button. The tape was jammed half way down the loading mechanism and could not be removed.

Mechanism Off Track

We removed the two bottom and two rear screws and lifted away the top cover. The top view of the unit, with its significant parts labeled, is shown in Figure 1. We took a good look at the cassette mechanism to see what was holding the tape in. We couldn't tell; the loading mechanism was all off track and seemed to be jammed against the side of the unit.

Inspect Belts and Gears

We inverted the VCR, removed the remaining bottom screws, and lifted away the bottom cover. We inspected all the belts and gears for wear, cracks or broken teeth. With the unit still inverted, we detached the connector in the front corner and carefully removed the mylar ribbon wire. This disconnected the front panel from the unit. Then we placed the VCR right side up, removed three large screws

securing the front panel to the chassis, and pulled the panel away. We pulled off the 2-pin IDC connector on the right side of the cassette mechanism (the one attached to the infrared sensor). Finally, we removed the screws and lifted off the metal plate to expose the cassette in full view (see Figure 2). We attempted to remove the tape and assess the damage.

Lift Out Tape and Cage

We were able to lift out the tape along with the cage that surrounds it. From what we could see, nothing was broken. Next, we removed the screws securing the main PC board to the chassis and removed the connector to the far left of the board. While lifting the PC board, a header must be disconnected from a PC mounted socket by the audio head. When doing this, you must careful not to crack the board. You can wedge something non-metallic under the board to hold it up and out of the way.

Look for Cracked Gears

We disconnected another connector attaching the loading mechanism to the PC board, the one next to the 2-pin connector. Then we removed the four screws securing the mechanism to the chassis (black plastic) and carefully lifted it out. We took a good look at everything, searched for cracked gears, and so forth.

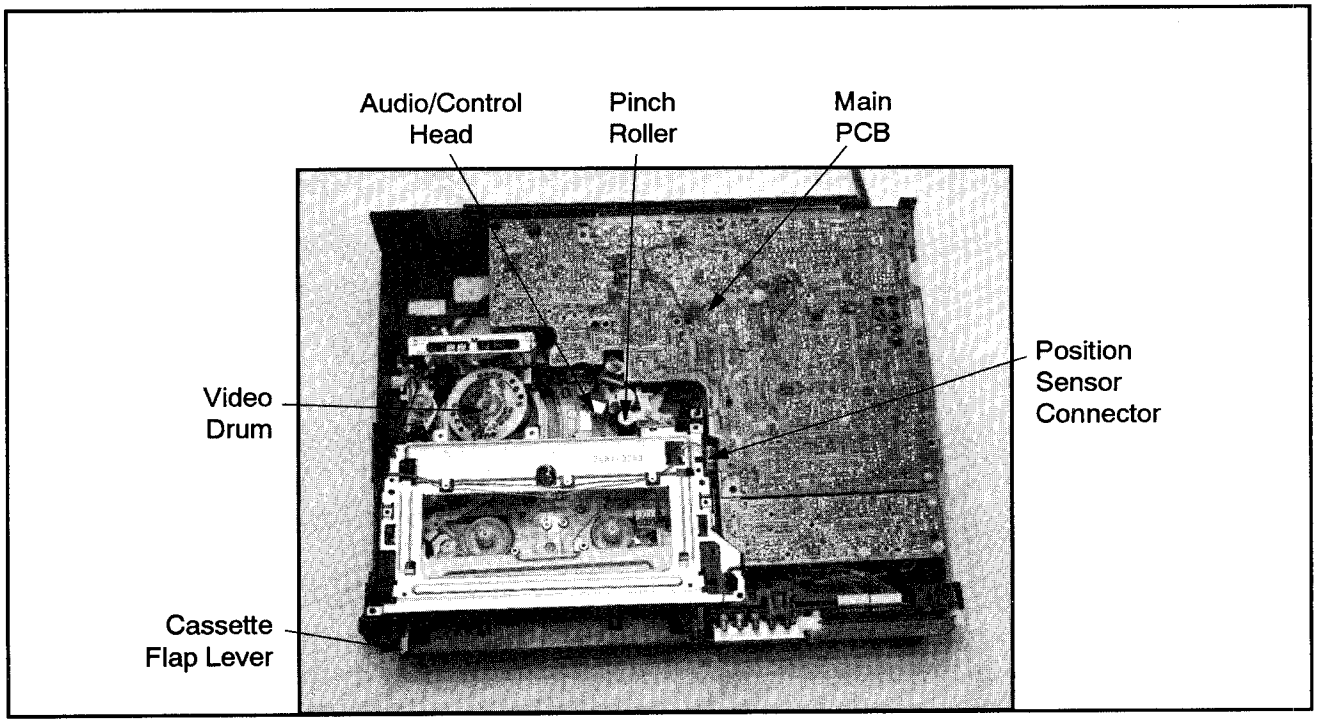

Figure 1: Top view of the Panasonic PV-S4764 with the cover removed

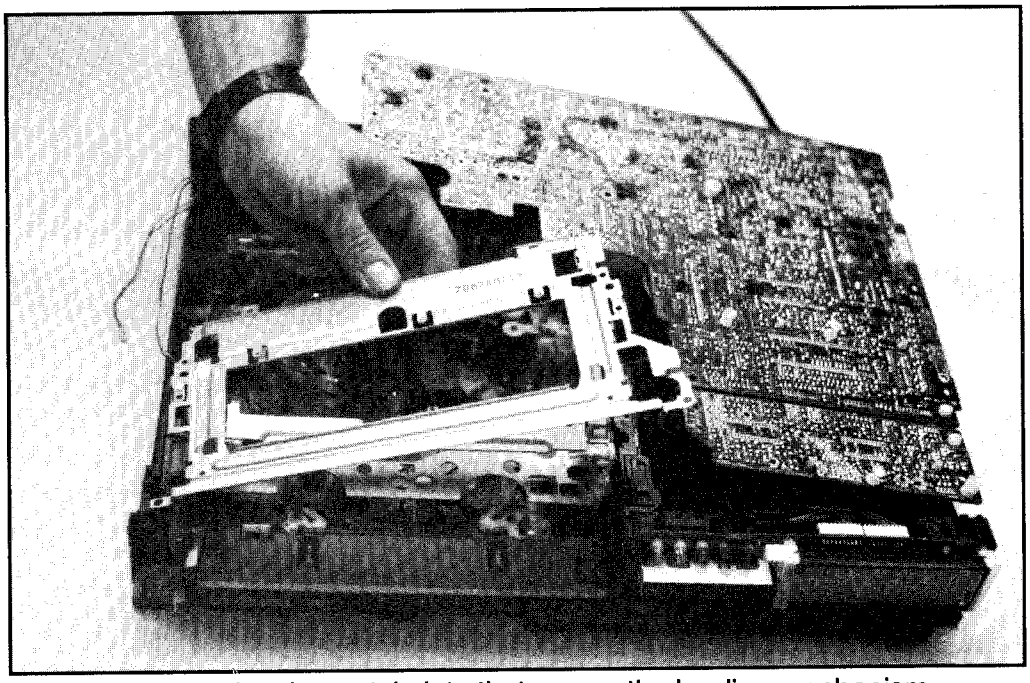

Figure 2: Removing the metal plate that covers the loading mechanism

Also, we checked for operation of the position sensor (a variable resistor), which tells the CPU if the tape is loaded.

Many Problems

At this point we discovered many problems. First, the gear that pulls the tape into the unit was cracked in half (see Figure 3). This particular gear also has a metal rod attached, which drives a similar gear on the other side of the cassette. This allows the tape to be pulled in evenly. Second, the position sensor was not attached to the mechanism. As a result, the CPU has no way of knowing where

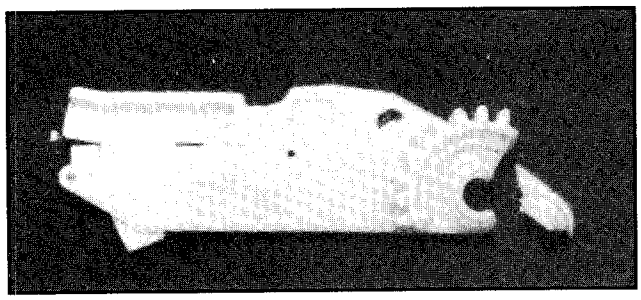

Figure 3: A closeup of the broken gear

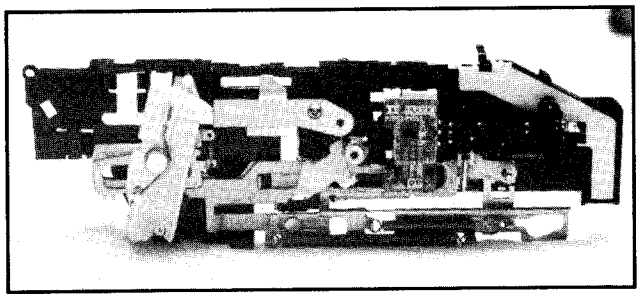

Figure 4: A side view of the loading mechanism

the tape is, if it is loaded, ejected, and so forth. This is probably why the customer could not load the tape originally. A closeup of the cassette loading mechanism is shown in Figure 4.

Replace Gear

We replaced the gear with an equivalent one, available from Panasonic. It isn't wise to try to glue the old one; the torque on the rod is strong enough to crack the gear again. We removed the position sensor by releasing the clips. We inspected and properly re-inserted it, with the metal tap inserted in the plastic opening. We inspected the VCR for further damage, including the newly exposed gears on the mechanism. Since the customer applied an extreme force on the tape, there was a chance that metal guides and posts were bent.

Reassemble

Now we reassembled in reverse order, making sure to align the loading mechanism properly. There is a black gear on the main body that meshes with the loading unit. The best way to ensure proper installation is to reassemble the pieces that were removed, before placing them back in the VCR. We made sure the big white gear (the one that was broken) meshed properly with the metal teeth

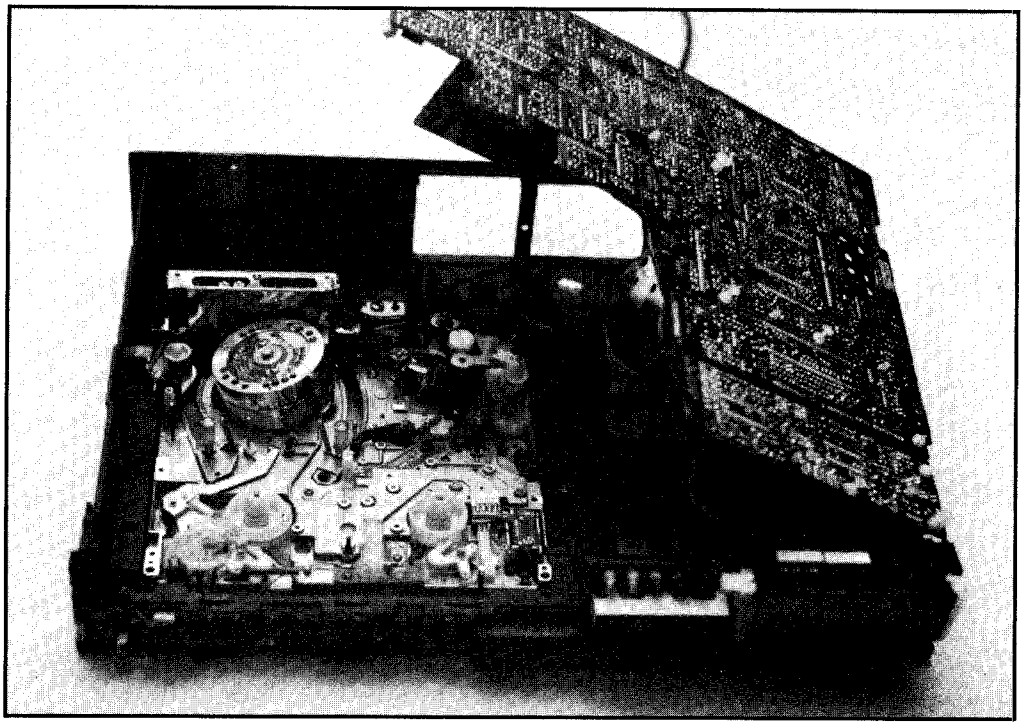

Figure 5: The video drum guides and capstan are retracted, showing that the CPU "thinks" that no tape is loaded

on the loading mechanism. We then reattached the 5-pin connector to the small position sensor PC board and calibrated the sensor.

Insert a Tape

Now we inserted a tape. The VCR took the tape successfully and loaded it on the drive wheels. All modes including PLAY worked as expected. We replaced the front panel, paying attention to the guide for the tape flap. It must mesh with the white plastic so when ejected, the flap lifts up and lets the tape out. We snapped the face on, re-attaching the connector underneath. Finally, we cleaned the heads and completely reassembled the unit.

Calibrating the Position Sensor

One of the last steps in this repair was calibrating the position sensor. This can be a tricky procedure if you are not familiar with how to do it. The first step is to determine what mode the VCR is in by looking at the tape guides. In PLAY and STOP modes, the guides are way up by the video drum. If the CPU "thinks" that a tape is not loaded, the guides should be back and the capstan should be in a position farthest from the pinch roller (see Figure 5). This is critical because powering the VCR with the position switch in the wrong position could cause gears to jam and be damaged.

Adjust Position Sensor

Once you determine if the CPU thinks the tape is in or not, you should adjust the position sensor accordingly. If the slide pot is all the way forward (away from the small PC board), that means a tape is loaded; all the way back means no tape is loaded. At this point you should carefully reattach the front face via the mylar connector and keep it out of the way. Be careful not to damage the mylar. Without re-installing the loading mechanism, attach the 5-pin connector of the position sensor to the VCR.

Turn On Unit

Now you can turn on the unit and see what happens. If the unit was in PLAY or STOP mode, you should hit the EJECT button. Approximately one second after the ejection motor begins spinning, you should push the position sensor back to the "no tape" position; the motor should stop. Immediately unplug the unit; it is now ready to be assembled. If the unit is already in STOP mode, the VCR should do nothing when turned on and the "tape in" light should be off. With the VCR in STOP mode, you can insert the loading unit. To do this, position the two white loading guides in a perfectly upward position so that the slot on the top is slightly angled towards the front of the machine (see Figure 6). Lower the unit into the VCR and make sure the black gear meshes properly (see Figure 7). Re-secure the four screws and insert the cage that holds the tape into the two slots on the ends (see Figure 8). Replace the top plate, reconnect the 2-pin connector and apply

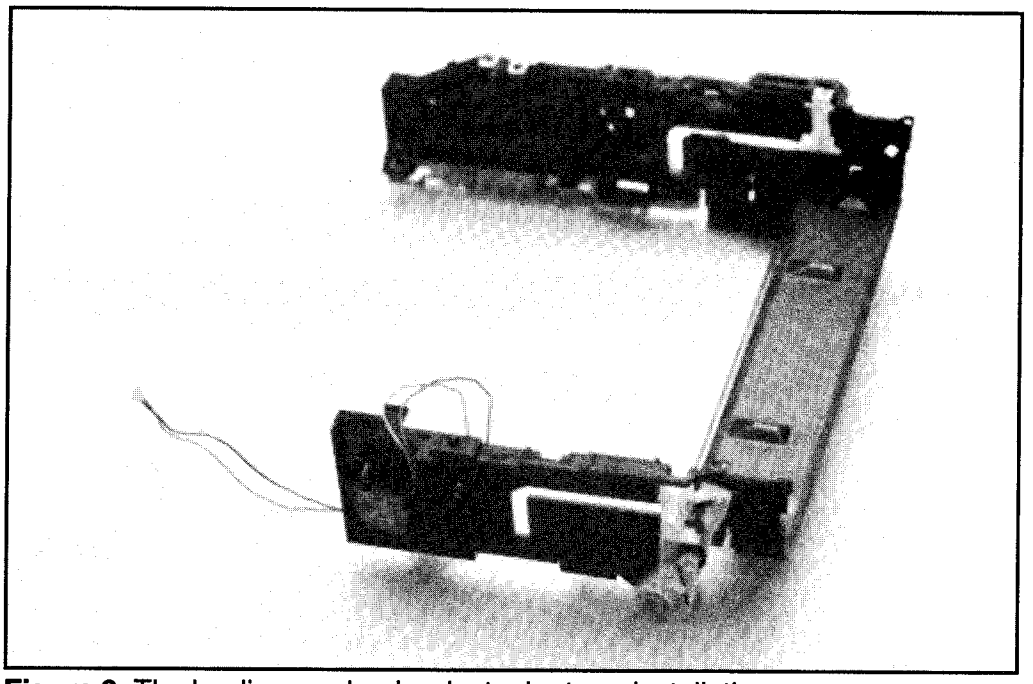

Figure 6: The loading mechanism just prior to re-installation

Figure 7: A closeup of the black gear meshing with the loading mechanism as it is installed

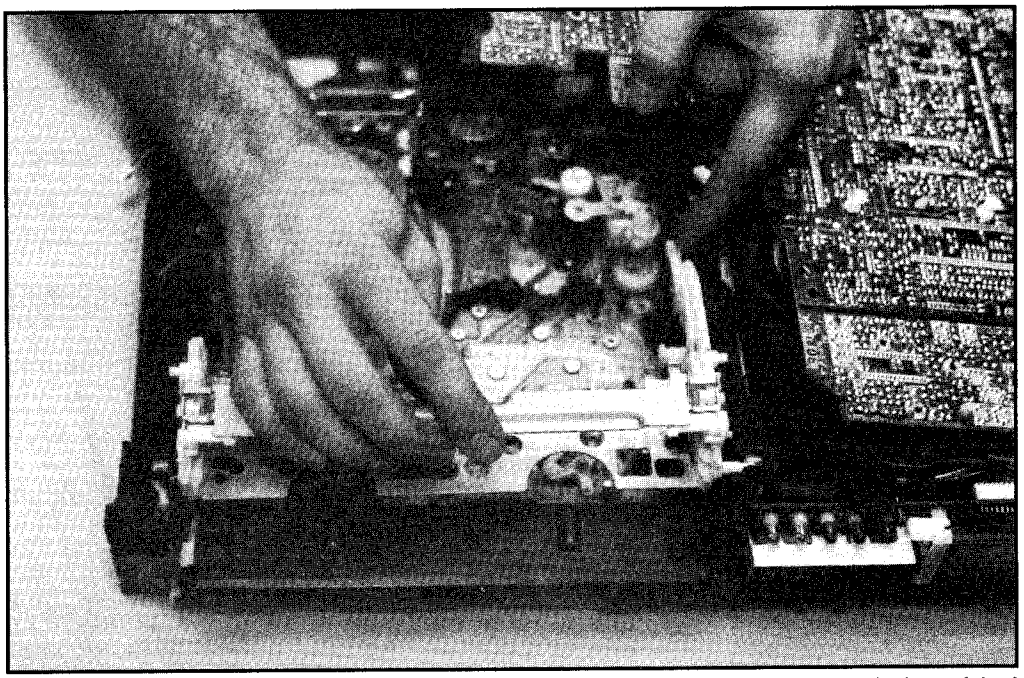

Figure 8: Re-installation of the loading cage; notice how the plastic pin is guided into the track with the index finger

power. Insert a test tape and see what happens.

Conclusion

Although this repair seems simple, it can be difficult if not done properly. The disassembly is not difficult, although failing to notice the mylar connector underneath the front face could be disastrous. As far as alignment upon reassembly, even one tooth off is too much. You may have to make many attempts before obtaining perfect alignment. With experience, you will know when it is right. Also, making sure that the CPU agrees with the loading mechanism is very important. Nothing is worse than the VCR attempting to eject a tape when the mechanism is already in the "tape out" state. Stripped gears and damaged parts are usually the result.

Mechanical Repairs

Notice that this repair was mainly mechanical. Not all VCR repairs entail expert knowledge about electronics. In fact, many VCR problems involve simple mechanical repairs since belts and idler wheels are the first things to go. No tools other than a screwdriver and some grease were needed here. — *Dana DeMeo*

The Panasonic PV-S4764 VCR as it arrived in the shop.	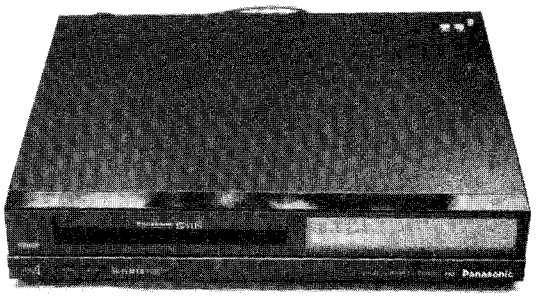
Removing the mylar connector that attaches the front panel to the unit.	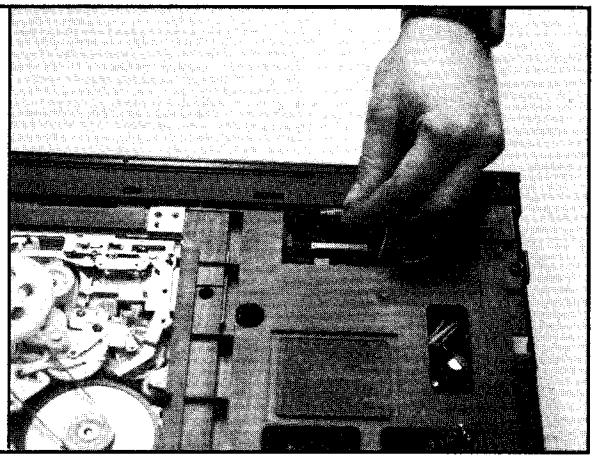
Removing the front panel.	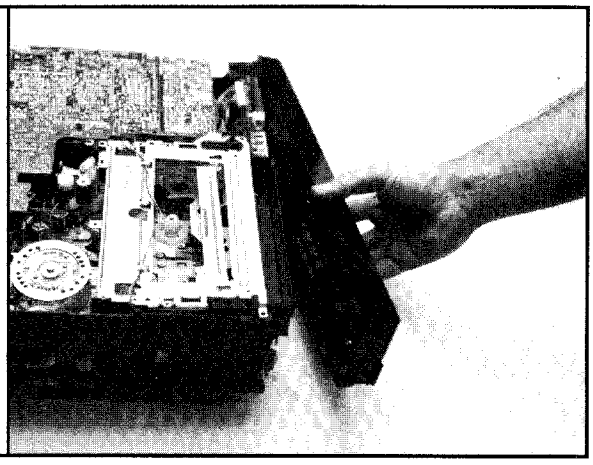

Removing the 2-pin connector facilitates disassembly of the loading mechanism.

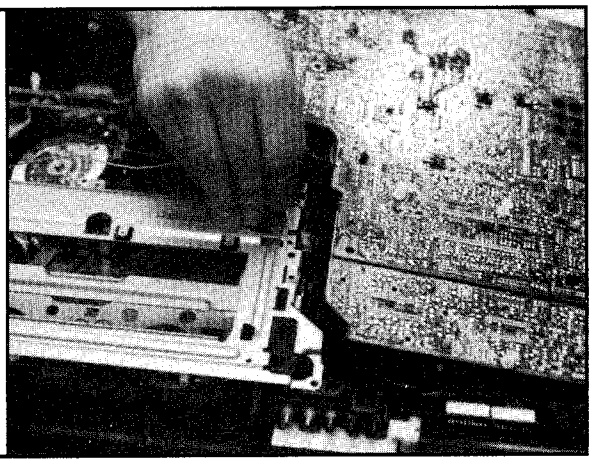

Removing the 4-pin connector so that the PC board can be lifted up.

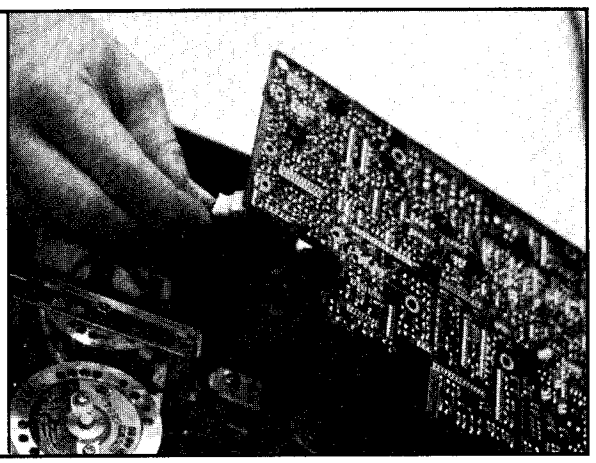

Removing the jammed tape from the VCR.

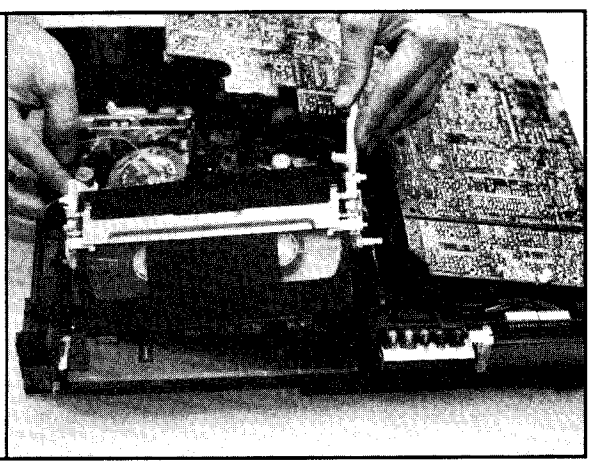

Unscrewing the cassette loading mechanism.

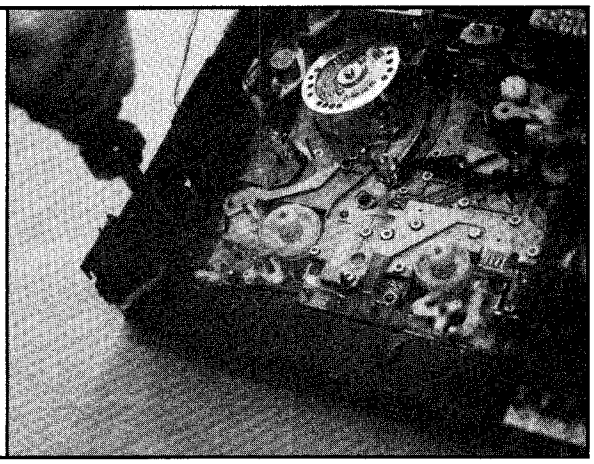

Removing the cassette loading mechanism.

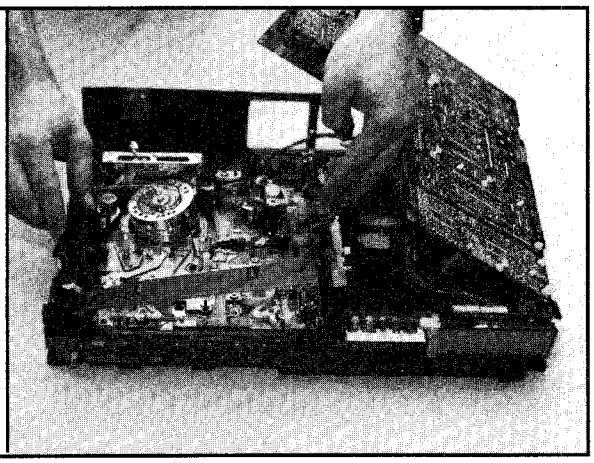

Cleaning the video drum.

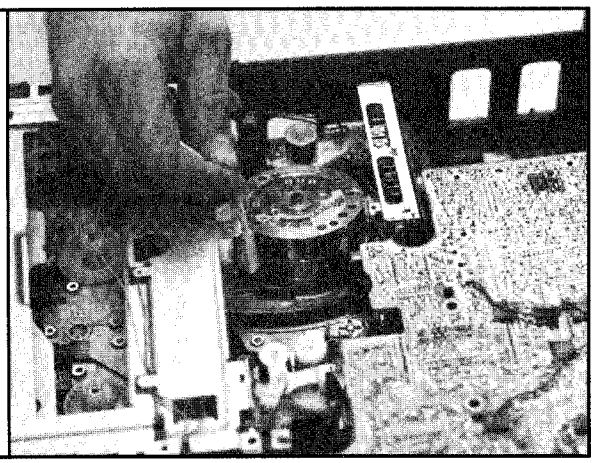

Problem: A Jammed VCR

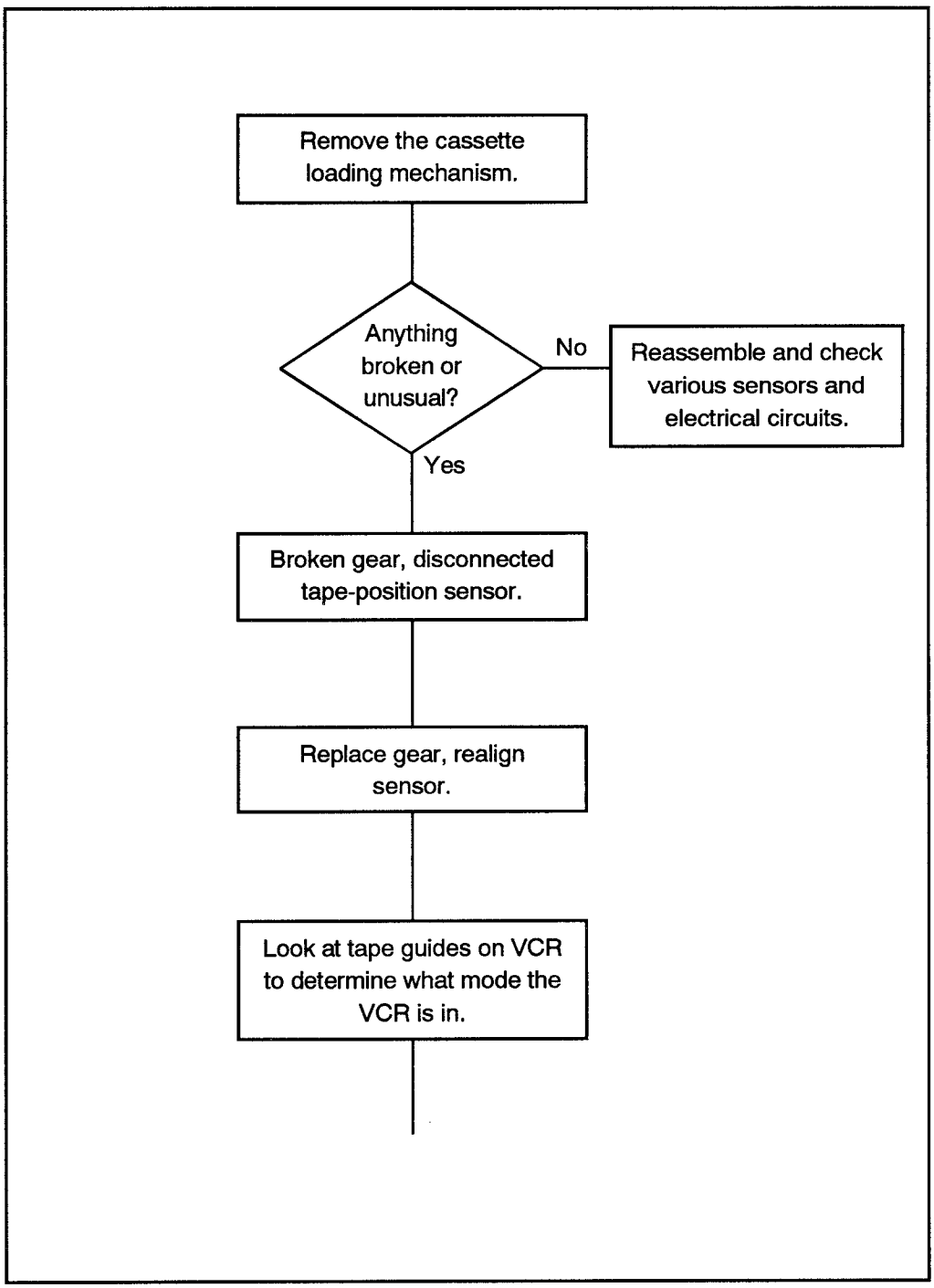

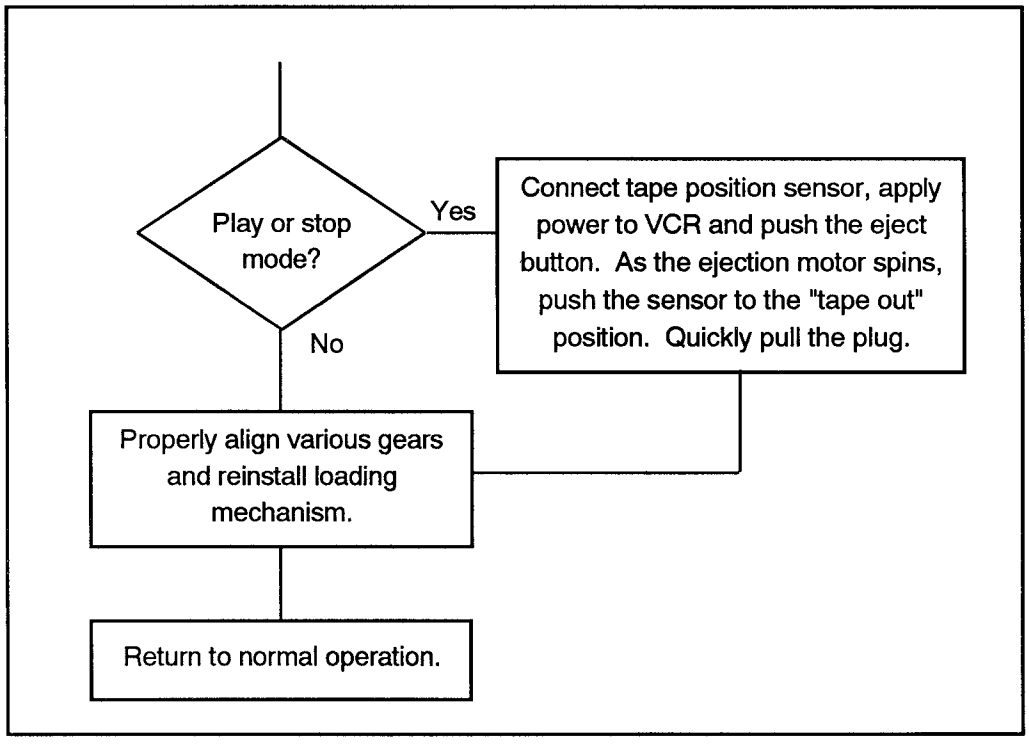
Play or stop mode?
Yes
No
Connect tape position sensor, apply power to VCR and push the eject button. As the ejection motor spins, push the sensor to the "tape out" position. Quickly pull the plug.
Properly align various gears and reinstall loading mechanism.
Return to normal operation.

5/VCR - VCS
Various Case Studies

5/VCR - VCS - RCAVLT470
RCA VLT470

Repairing Distorted Video in an Abused VCR

You may have seen the commercial for a major credit card company that shows a VCR with oatmeal coming out the cassette mechanism. The problem in this case study was not so severe, but was caused by a child's mischief, nevertheless. When the RCA VLT470 VCR came into the shop it was scratched, dusty and abused. The front panel was missing, too.

Head Damage

The customer claimed that her son was "playing" with the VCR and stuck a screwdriver inside the cassette mechanism. The next day, tapes could not be viewed due to distorted video. We suspected that damage to the alignment or heads occurred due to the screwdriver.

Repair Procedure

We applied power to the unit to verify the customer's complaints. We inserted a test tape (one that would not be missed if it were destroyed) and tried all features

Figure 1: A closeup of the video drum showing the scratch passing right through the head

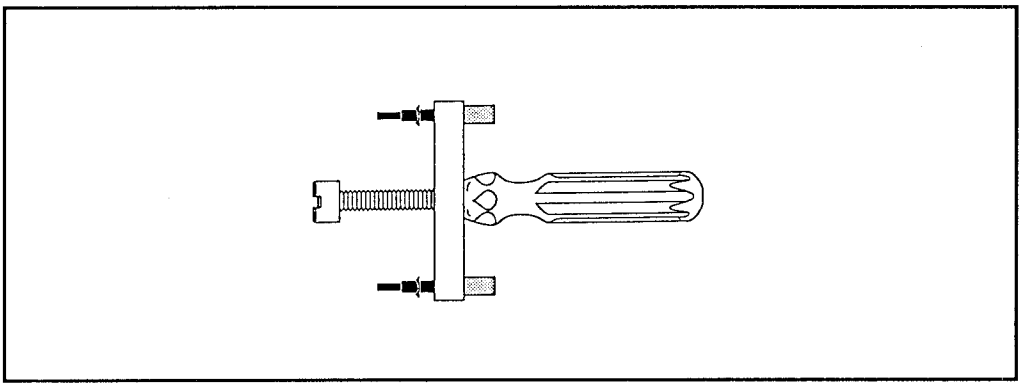

Figure 2: The video drum extraction tool

including play, fast-forward and rewind. As described by the customer, the video output during playback appeared very distorted.

Inspect Heads

We removed three screws at the rear of the unit and lifted away the top cover. Then we removed three more screws that secured the metal shield over the cassette mechanism. After removing the shield, we inspected all heads, guides and rollers. Sure enough, the video drum had a deep diagonal gouge going right into one of the heads (see Figure 1).

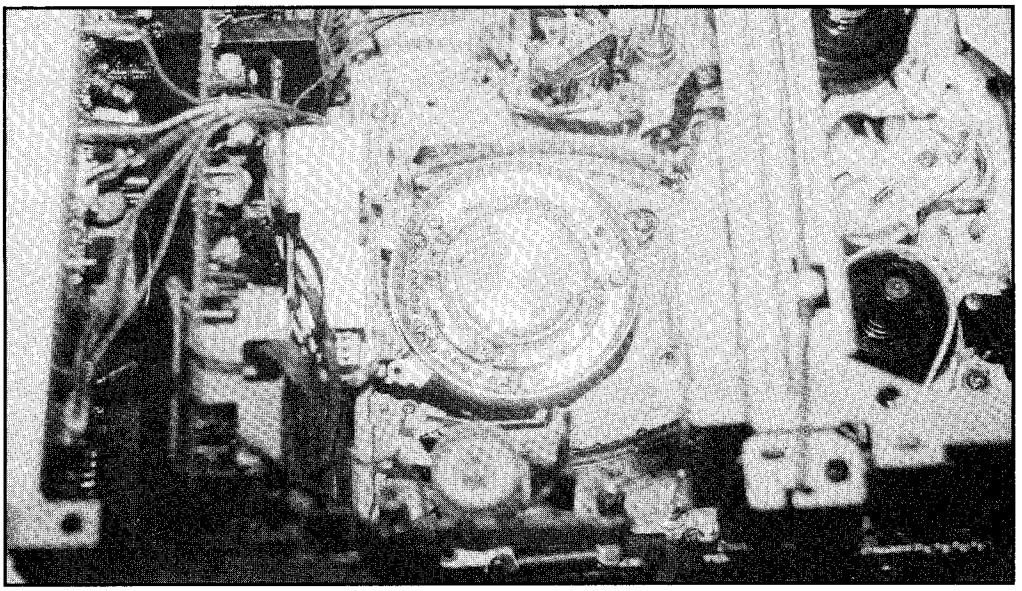

Figure 3: With the video drum extracted, you can see the servo

Extract Drum

We removed the metal arm extending over the video drum, desoldered the six larger solder pads, removed two screws, and carefully extracted the drum (see photo sequence). The video drum should be removed with an extraction tool (see Figure 2) as a precaution against damage to the servo and assembly (see Figure 3). The drum should be replaced with an equivalent (cost is approximately $80). Whenever you replace video heads you must make sure to orient them properly. In this case, a white outline is silk-screened onto the PC board of head #1, as well as inside the servo cavity. We resoldered and replaced all parts. Then we cleaned the entire mechanism and demagnetized the heads. As expected, the replacement head was the cure.

Conclusion

Although this repair was simple, the decision to replace a VCR head is not always easy. Make sure you know that the head is at fault before fooling around with this delicate part. If the head is not defective, replacing it can be an expensive mistake.
— *Dana DeMeo*

Problem: Repairing Distorted Video on a VCR

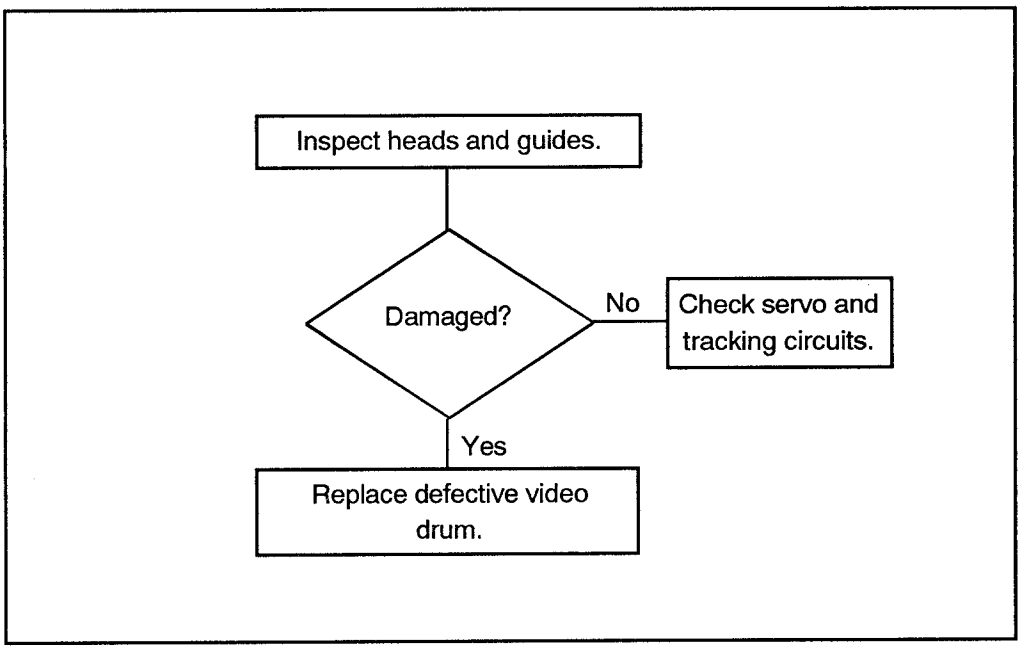

The RCA VLT470 VCR as it arrived in the shop.

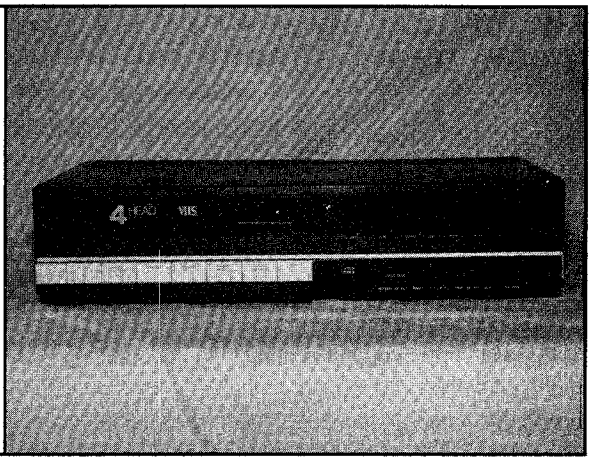

Removing the top cover of the VCR.

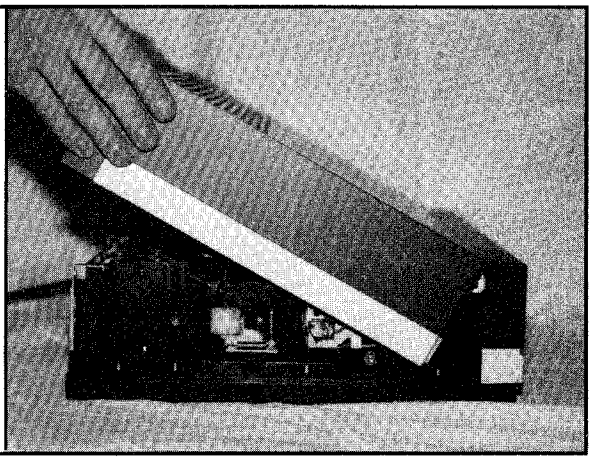

Removing the plate covering the cassette mechanism.

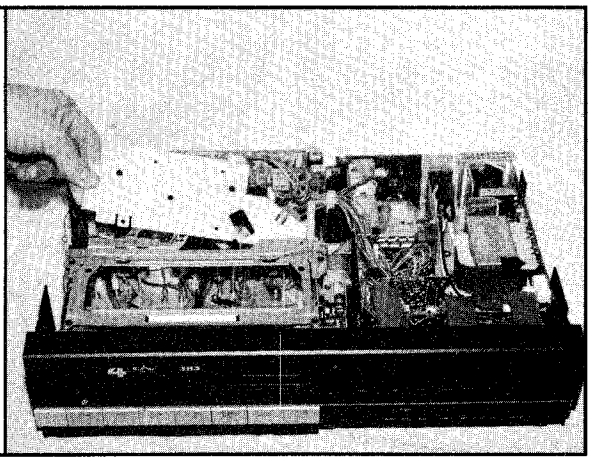

Desoldering the terminals of the video head.

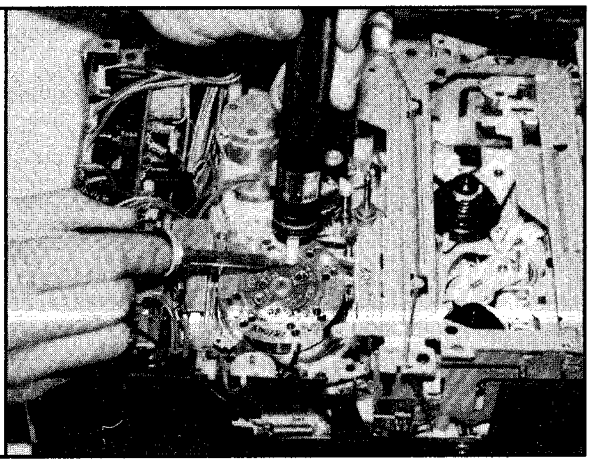

Unscrewing the video head.

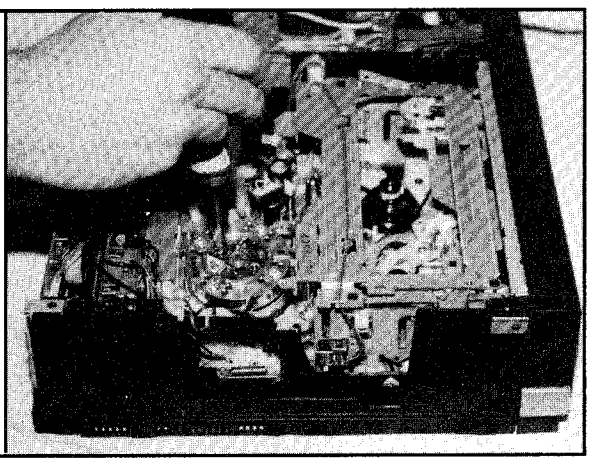

Cleaning the new head.

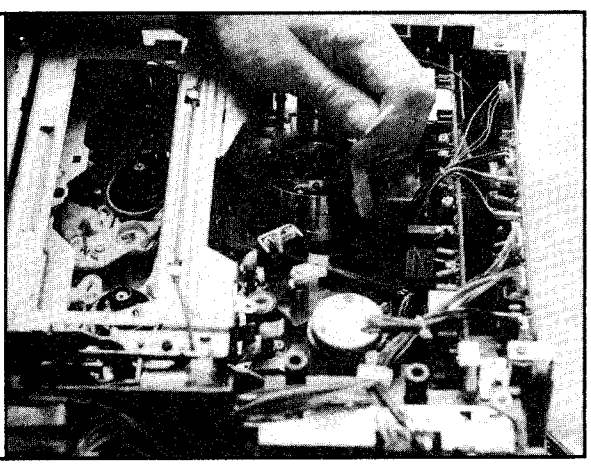

Table of Contents

Section 6
Television

Table of Contents

6/TTV *Tube Television*

6/TTV - A *An Introduction*
6/TTV - TE *Test Equipment*
6/TTV - TE - TV/V *Specialized TV & Video Servicing Equipment*
6/TTV - TR *Troubleshooting and Repair*
6/TTV - TR - A *An Introduction*
6/TTV - TR - AS *Audio Section*
6/TTV - TR - BA *Bandwidth Amplifier*
6/TTV - TR - CPT *Color Picture Tube*
6/TTV - TR - DC *Deflection Circuits*
6/TTV - TR - FPC *Frequency and Phase Control (Automatic)*
6/TTV - TR - IFA *IF Amplifier*
6/TTV - TR - PS *Power Supplies*
6/TTV - TR - T *Tuner*
6/TTV - TR - VS *Video Signals*

6/TTV - VCS *Various Case Studies*
6/TTV - VCS - Mag T985/T986 *Magnavox Chassis T985-05/-06/-07/-08, T986-06*

Table of Contents

6/TTV
Tube TV

6/TTV - A
An Introduction

For a color television to function properly, several qualities must be included. These are contrast, brightness, gamma, color saturation, color hue and detail.

Contrast

Contrast refers to the difference between adjacent shades of black and white, or the steps of gray. Having only black and white would have a contrast level of 2. A light gray against a white would be low in contrast, as would a soft green against a light blue.

Lighting conditions in the viewing room often affect the perception of contrast. A user adjustment is found on televisions to help. A room with a high degree of light requires more contrast than a room with less available light. The contrast level controller adjusts the amplitude of the video signal applied to the picture-tube control grid.

Brightness

The brightness of a picture refers to the overall intensity of the image on the screen. As with contrast levels, the brightness depends upon the room in which the receiver is being viewed, as well as personal preference.

The brightness control varies the amount of negative bias on the picture tube control grid. The higher the negative bias voltage, the less bright the picture. In some television sets there is an automatic brightness optical sensor which varies the negative bias voltage depending on ambient light.

Gamma

The gamma measurement indicates the relative contrast between an original scene and a reproduced television image of that scene. If the original image and the reproduced image are equal, then the gamma equals 1. A washed-out signal suggests a gamma of less than 1. A gamma greater than 1 produces a picture with excessive contrast.

Color Saturation

Color saturation is the level of color in an image. In other words, it is the amount of a particular color that is used to produce that color. Too little color saturation will produce a black-and-white signal. At the other end, a picture with too much

color saturation will produce a signal with too intense or unnatural colors.

Color saturation is dependent on the adjustment of the 3.58 MHz color signal. Increasing the adjustment will increase the amplitude of color saturation and decreasing the adjustment will decrease the amount of color saturation.

Hue

The tint, or hue, refers to the actual colors, like red, green, blue, etc. Color information is transmitted as phase differences between portions of the color burst, or color signal. By changing the phase difference in the signal, you can create different colors. Many TVs of today use automatic color control (ACC) and automatic tint control (ATC) circuits to adjust the color to a proper level. This is controlled by the portion of a video color signal referred to as the vertical interval reference (VIR).

Detail

Detail is the sharpness of a picture. Detail is also referred to as resolution and definition. The number of elements, or pixels in a picture describe the resolution of the image and are directly related to the detail. A broadcast signal has 483 lines of picture information with each line containing 540 pixels. This remains constant for every size and shape of receiver, so having a bigger screen doesn't make for a better picture. Larger sets have larger images, but also have larger pixels. This is why projection screen televisions appear less detailed than smaller tube sets.

6/TTV - TE
Test Equipment

6/TTV - TE - TV/V
Specialized TV & Video Servicing Equipment

All of the test equipment discussed in Section *"4 Tools and Test Equipment"* will be used when repairing video equipment like television receivers, video cameras, camcorders, VCRs and video disc systems. However, there are a few additional, specialized pieces of equipment required to perform proper repairs and adjustments.

Waveform Monitors

A type of special equipment used when checking video signals in television and video equipment is the waveform monitor. A waveform monitor is a specially calibrated instrument designed to process a video signal and display it on a screen

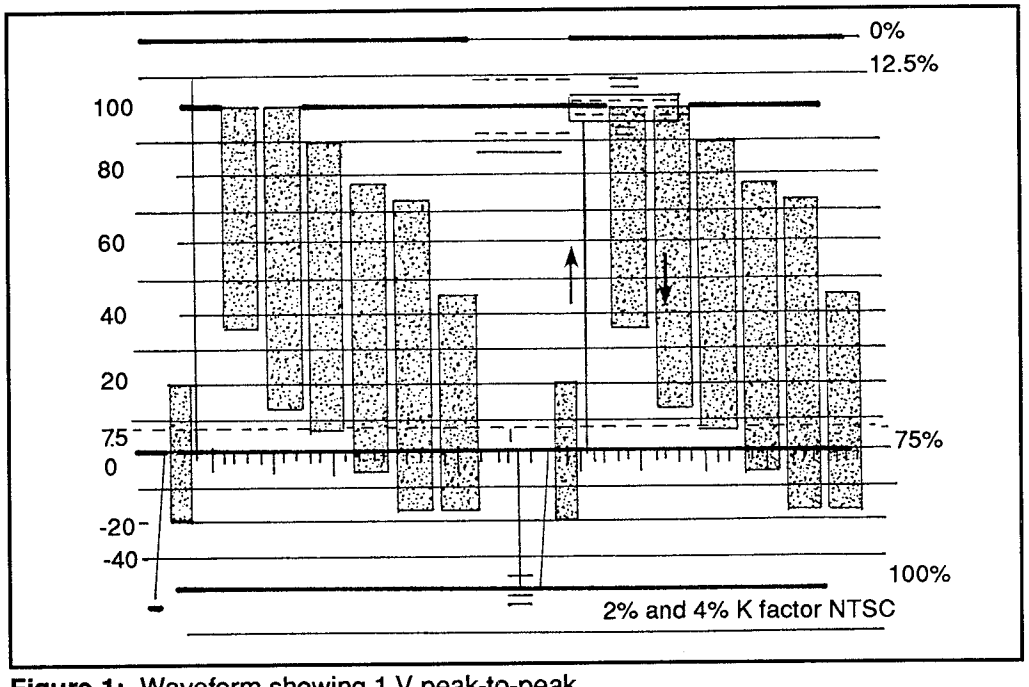

Figure 1: Waveform showing 1 V peak-to-peak

(while adhering to the NTSC video standard). Actually, a waveform monitor deals with the luminance, or the black-and-white portion of a video signal. Video signals are specified as 1 V peak-to-peak which is measured from the lowest tip of sync to the brightest peak white. This is shown in Figure 1.

Normally a video signal is measured in the 2-line sweep mode, or the 2H position when viewing a waveform of a video signal. The bottom of the sync is set so it is on the -40 IRE line and the top bar should not exceed the 100 IRE marking.

IRE stands for Institute of Radio Engineers, who were the original broadcast engineering group. This group established many of the television standards used today.

A video signal of 1 V relates to 140 IRE which is why the signal starts at -40 and peaks at 100. This way of measuring a video sync level of 40 IRE is easier than saying 3/10 V.

Sync is the synchronizing pulse in the vertical and horizontal retrace interval of a video signal. These pulses keep video signals matched, or in sync. Without a sync signal, it would be impossible to record a video signal or display a video signal on a television.

The picture or video area occupies the 7.5 IRE to 100 IRE. Any level above 100 IRE is considered bad and could cause problems in the final output, usually as a buzzing sound in the audio playback. If the video level does not approach the 100 IRE level, the video picture will appear dark. If the black level drops below the standard 7.5 IRE, low-level video is crushed. Video level is not considered bad if these levels are not met while viewing live video. There may not be blacks or whites that approach these limits, but if there are and they do not exceed these limits, the video signal can be assumed to be properly adjusted. Television studio equipment can handle levels up to 120 IRE and most will clip levels at a preset 105 IRE to prevent problems. Home equipment will have a degraded picture from video signals that are too high. (This is especially true if the signal was recorded and played back on a VCR.)

White is set at 100 IRE. You might think that black should then, logically, be at 0 IRE. This is not the case. Official TV black level happens at 7.5 IRE and is often referred to as the setup, or pedestal level. If the luminance portion drops below the 0 IRE level, it will interfere with video processing circuits. This level provides a safety margin of 7.5 IRE, then, to protect such circuits. There is what is known as "super-black" at a level of 3.5 IRE, which is used for key source

information. For your purposes of video repair in NTSC video, however, you should always stay close to the 7.5 IRE level. Otherwise, details in darker areas will be lost.

Looking at the waveform display in Figure 1, we see a flat bar and six colored bars modulated with a subcarrier frequency from a color bar generator. The first step (a flat step at 100 IRE or 77 IRE, depending on the generator) is the white bar. The next six are the actual color bars. They are yellow, cyan, green, magenta, red and blue. There is also a bar at 7.5 IRE that is unmodulated. You will remember from above that this is the black bar in the pattern. The greater each color's bulk, the greater its modulation is be displayed on the waveform monitor screen.

Flipping a switch on the front panel to the flat position will remove the color burst and chrominance from the waveform, leaving the luminance signal. This is the normal selection for adjusting video levels.

Vectorscopes

Another type of special video test equipment available is the vectorscope. The vectorscope measures the chroma, or color, levels and can measure system timing, SC/H (subcarrier/horizontal) phase and non-linear distortions. Figure 2 shows a vectorscope display with properly set-up chroma levels.

A vectorscope is normally used to check the proper set-up of a video signal that is recorded or sent out over the air. Therefore, a vectorscope can be very useful in checking the proper playback of VCR, the output of a camera, or a monitor/

Figure 2: Vectorscope

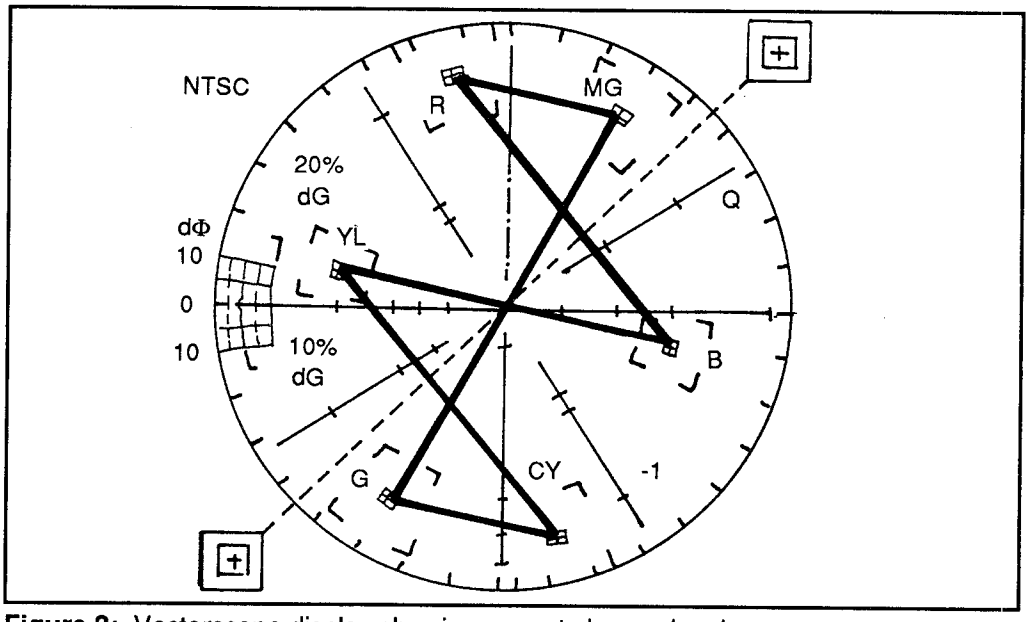

Figure 3: Vectorscope display showing correct chroma levels

television with video out. The test signal to be input to these devices for testing would be a color bar display. By sending the color bar output of a device we can view the waveforms on a vectorscope and determine if there is a problem in the

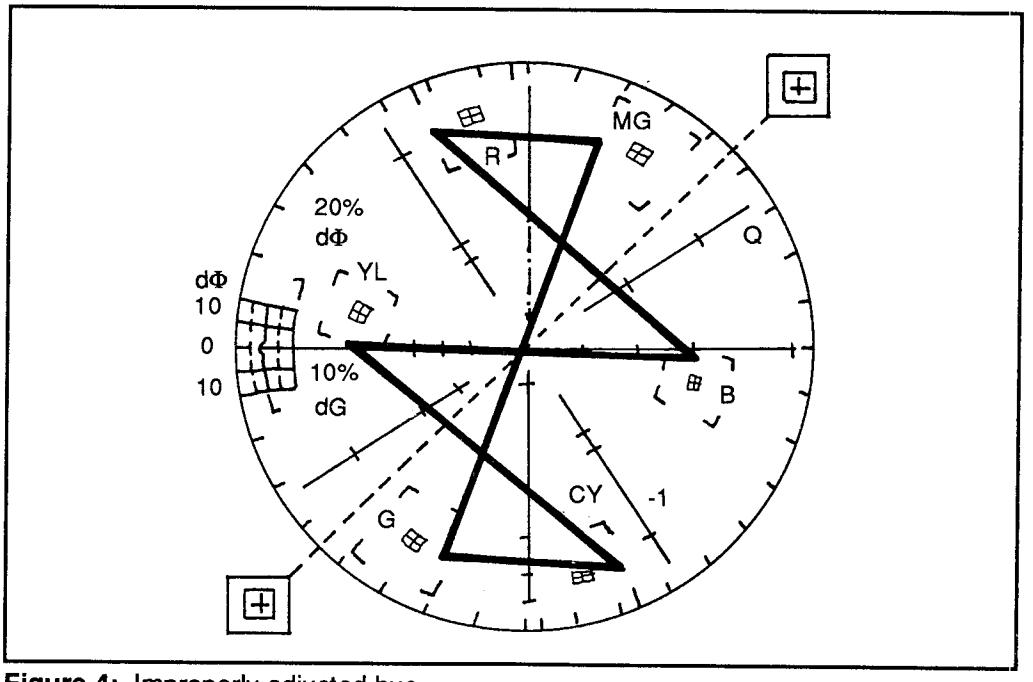

Figure 4: Improperly adjusted hue

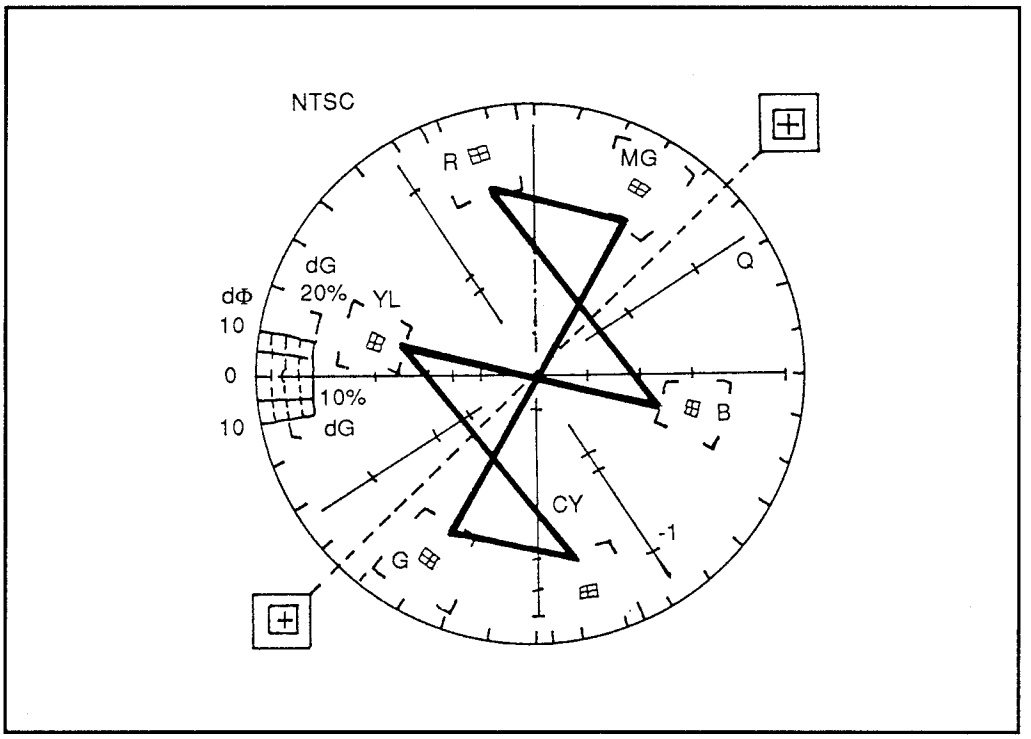

Figure 5: Low chroma level

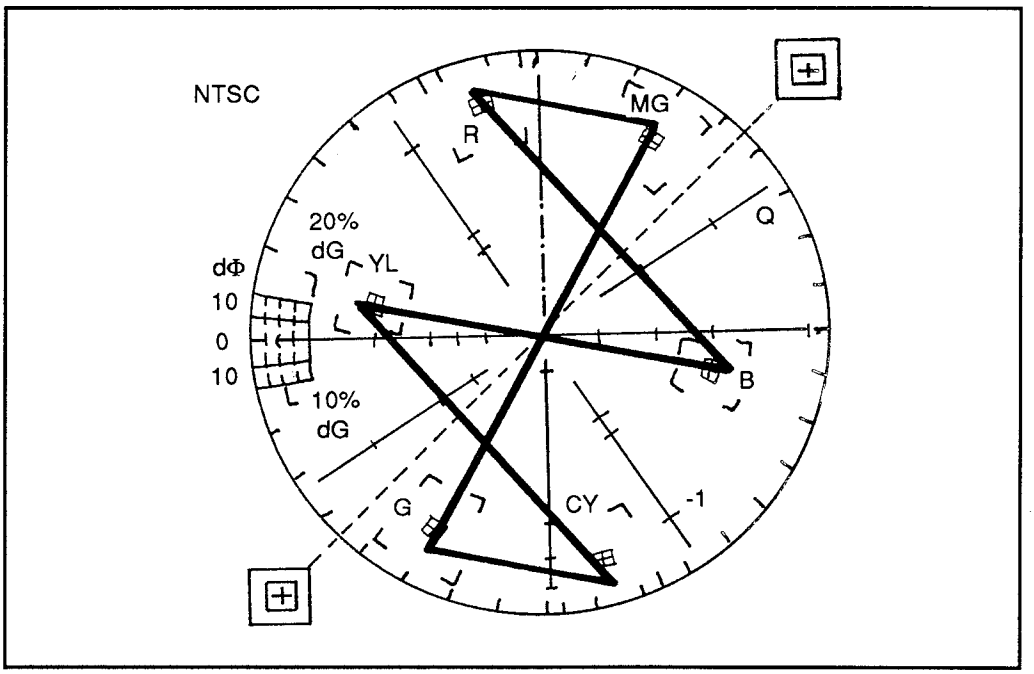

Figure 6: High chroma level

device. The phase control of the scope should be set at the 9 o'clock position. When a proper color-bar signal is sent to the vectorscope, the color-bar dots will center on the cross hairs inside the small boxes. Minor shifts from the cross hairs are within acceptable limits and normal. The box represents a 2 % error margin, and the larger box represents a 20 % error margin.

If the whole array of dots seems to be rotated to the right or the left of the boxes, you have a hue or chroma level problem. Figure 4 shows this. Adjusting the hue control should correct this problem.

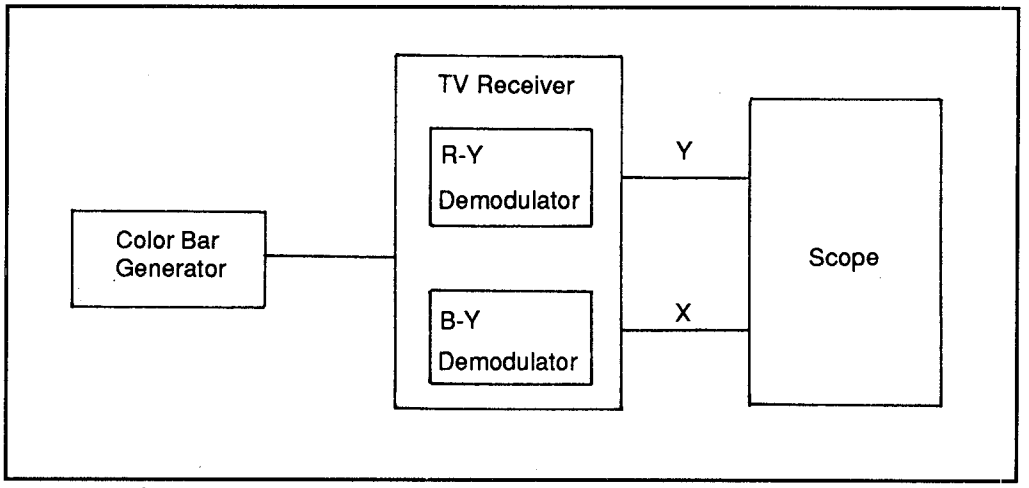

Figure 7: Connecting an oscilloscope to view vectorgrams

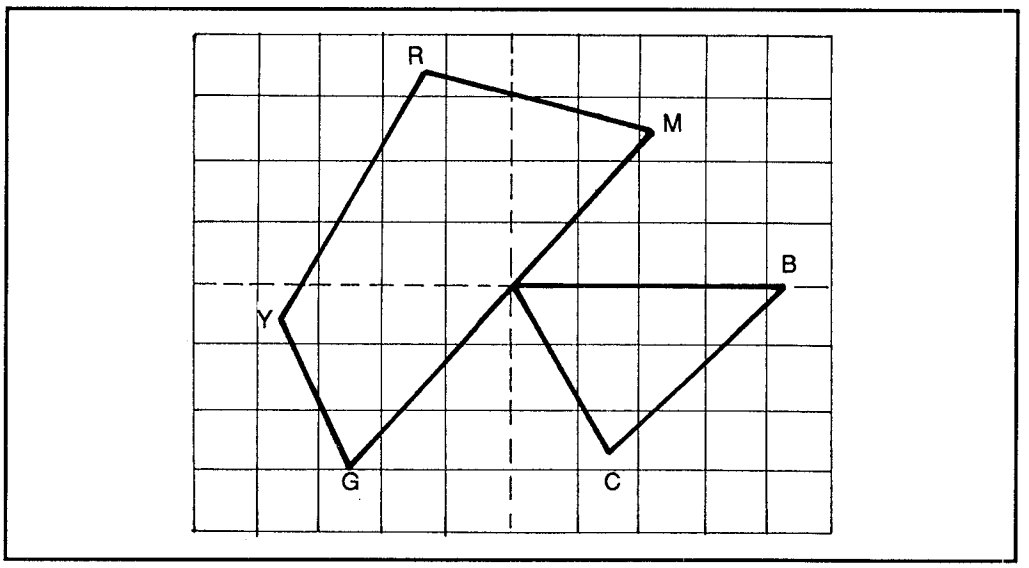

Figure 8: Typical vectorgram display

If the dots do not reach the boxes at all as in Figure 5 then the chroma level is too low. If the opposite happens, as in Figure 6, then the chroma level is too high. In either case, the chroma level output needs to be increased or decreased to correct this problem.

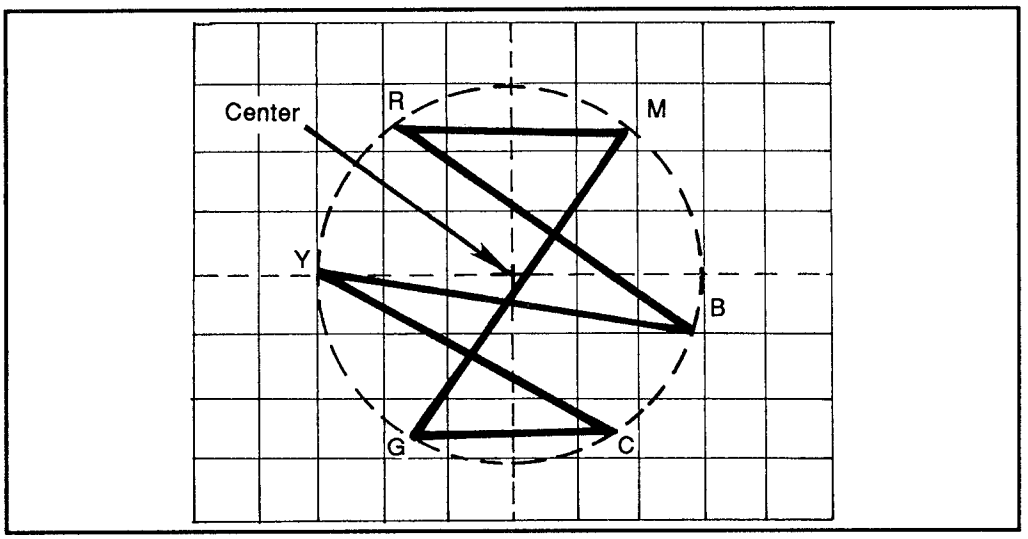

Figure 9: Baseline curvature

A vectorscope is basically an oscilloscope that is capable of displaying Lissajous patterns of chroma waveforms. These types of Lissajous patterns are called vectorgrams. Most vectorgrams are created by a color-bar generator.

Viewing vectorgrams can be done by connecting an oscilloscope to the outputs of the R-Y and B-Y demodulators as shown in Figure 7. The resulting pattern is shown in Figure 8. The vectorgrams will not be as pretty as the examples. Actual vectorgrams tend to be rounded with no two petals of the wave exactly alike. This happens from the residual phase errors indicated by the lack of angular uniformity.

If the R-Y and B-Y signal channels have subnormal bandwidth, there will be a distortion of the waveforms, which may cause curvature in the wave. Figure 9 shows an example of baseline curvature. The spokes of the pattern do not reach the center point in the vectorgram. This space has a circular boundary when the R-Y and B-Y waveforms have equal baseline curvatures.

When viewing pictures on television screens, always remember that a television is a very forgiving piece of equipment. By adjusting hue, color, brightness and

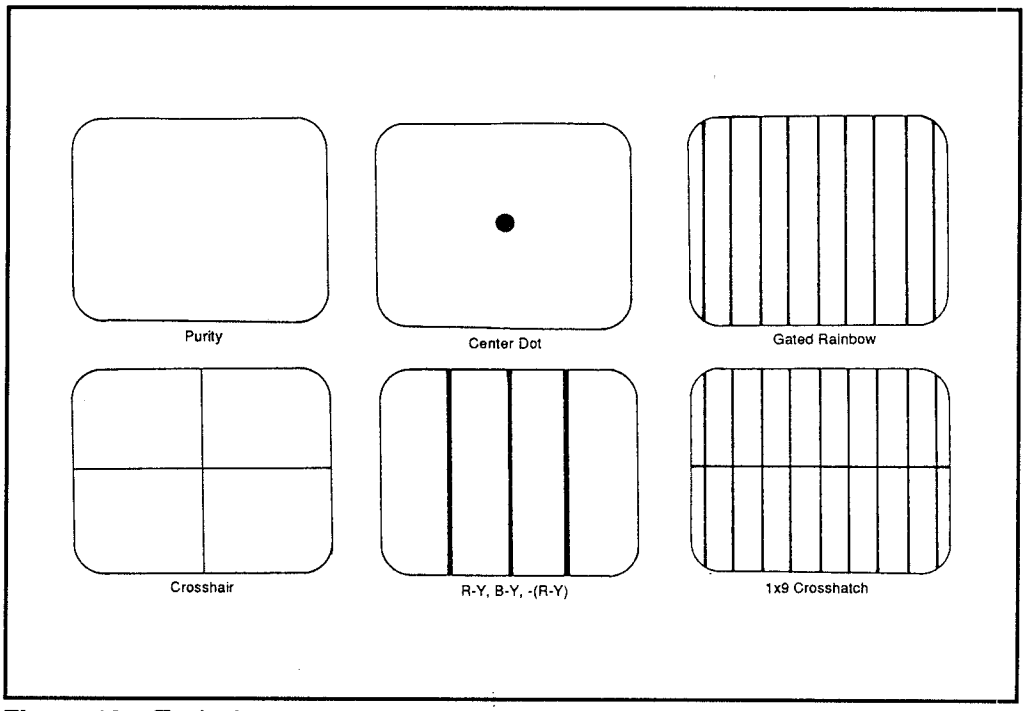

Figure 10a: Typical patterns

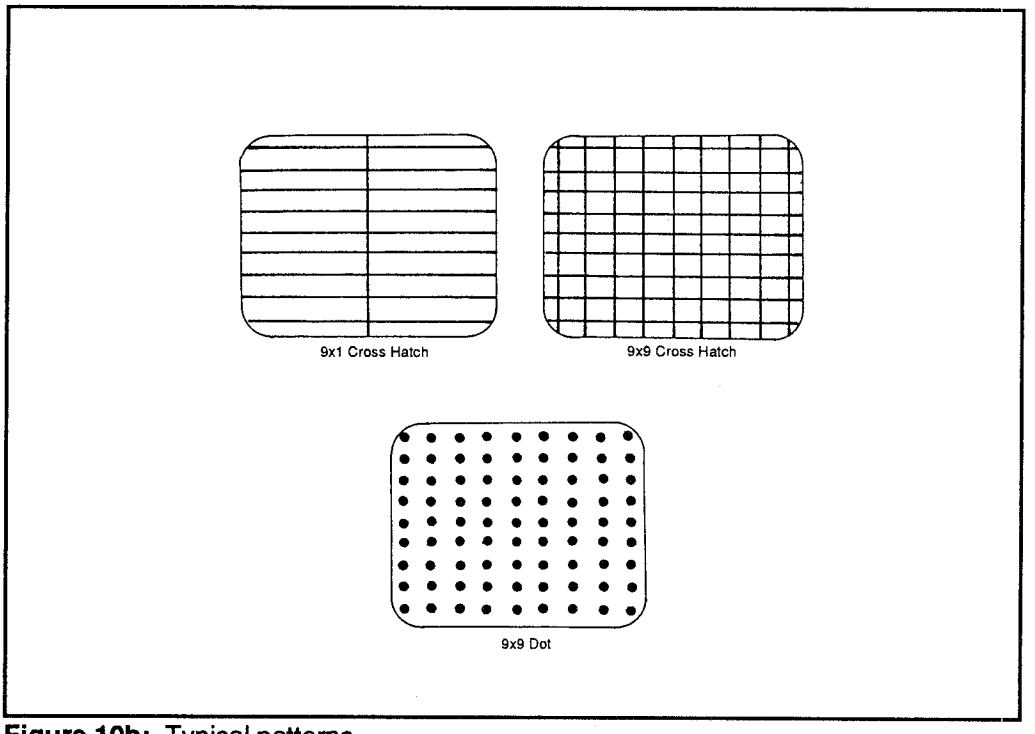

Figure 10b: Typical patterns

contrast one can get a satisfactory image even if the unit is not operating properly. By using a vectorscope and/or a waveform monitor, you can be sure the signal is correct.

Vectorscopes and waveform monitors are available as stand-alone instruments or as combination units. When applicable for demonstration in this manual, we shall try to convey the proper way to use these units.

Pattern Generators

The pattern generator can create color-bars, white dot patterns, and crosshatch patterns. All of these are necessary when aligning and/or repairing television and video equipment. This particular instrument provides a chroma frequency of 3.579545 MHz. This frequency conforms to the NTSC standard and provides true primary and complementary colors at full saturation and brightness. Figure 10 shows the typical patterns generated by such a device.

These patterns can be used to check color purity, static convergence, dynamic convergence, linearity, color processing circuitry adjustments, and automatic frequency and phase control circuitry (AFPC).

A blank raster checks color purity. Dot patterns are used for convergence. Crosshatch patterns and other types of line patterns are used for linearity adjustments. When crosshatch vertical and horizontal lines are of equal brightness, the receivers fine tuning is known to be adjusted properly. Color bars would be used to check for faults in the color processing stages.

Figure 11: Picture tube tester

Color Picture Tube Tester

A picture tube tester is used to check the operation of a picture tube. Figure 11 shows a picture tube checker. The picture tube tester is used to apply test voltages to the picture tube heaters and control grids. In many cases if the tube is found to be bad, replacing the television is the best method.

If there is a problem with a picture tube, it is sometimes possible to rejuvenate a tube temporarily by applying higher than normal voltages with a picture tube tester. Problems that may be fixed by excessive voltages applied to the picture tube are: open heaters, poor electron emission characteristics, unbalanced gray scale tracking, shorted connections between picture tube electrodes, and open connections between picture tube electrodes. If the problem is with the open heater connections there is no repair possible and the unit should be replaced.

Color Test Jig

A color test jig is used in conjunction with a picture tube tester. It consists of a substitute picture tube and yoke and includes an anode kilovolt meter. Drive signals from the unit being tested are sent to the picture tube heater, cathodes, and grids. There are several special adaptors which connect the color test jig to the unit being tested.

The use of a color test jig eliminates any uncertainty one may have about a picture

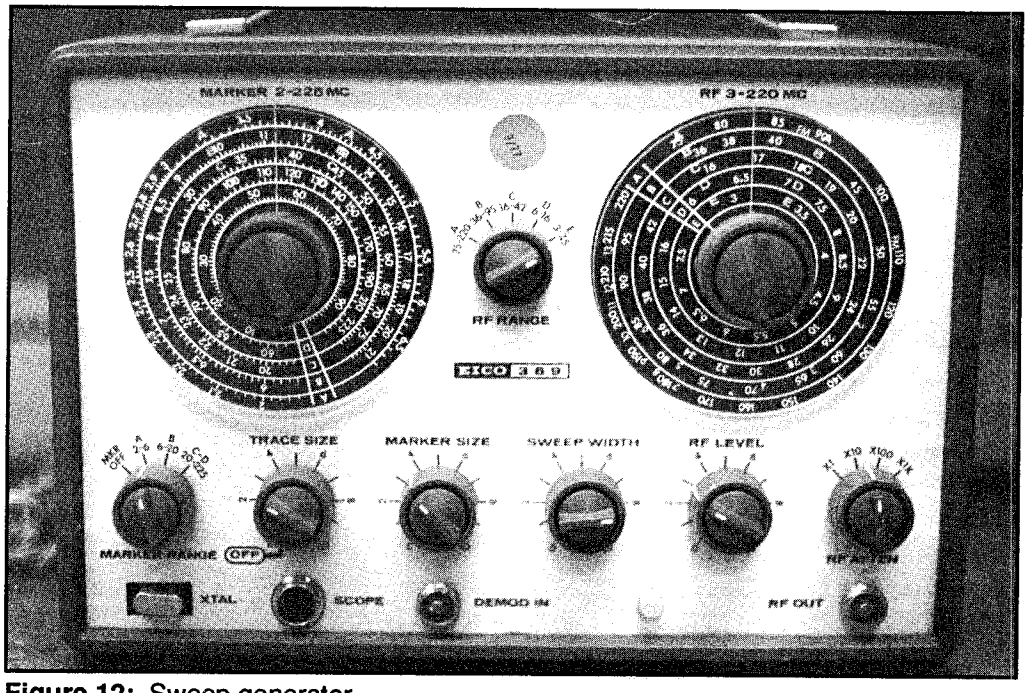

Figure 12: Sweep generator

tube's operation. It will also eliminate the many hours and dollars that may be spent trying to locate problems within a television receiver.

Sweep Generator

A sweep generator is used along with an oscilloscope to test and align the tuned circuits in the signal channels of a television receiver. It is capable of creating VHF, video-frequency and IF outputs. By using the harmonics of the VHF output, the UHF tuner can be swept as well.

Figure 13 shows the basic principle of sweep alignment. Applied to the tuned circuit under test is an FM signal with appropriate center frequency and deviation. Tuned circuits have certain frequency characteristics for which the demodulated output appears on a scope screen as a plot or graph of the output voltage as opposed to frequency.

Within the curve may be beat markers from the sweep generator's marker circuitry. A beat marker signal is mixed with the sweep signal after the signal has passed through the receiver circuits.

The marker amplitude displayed on the scope screen is independent of the

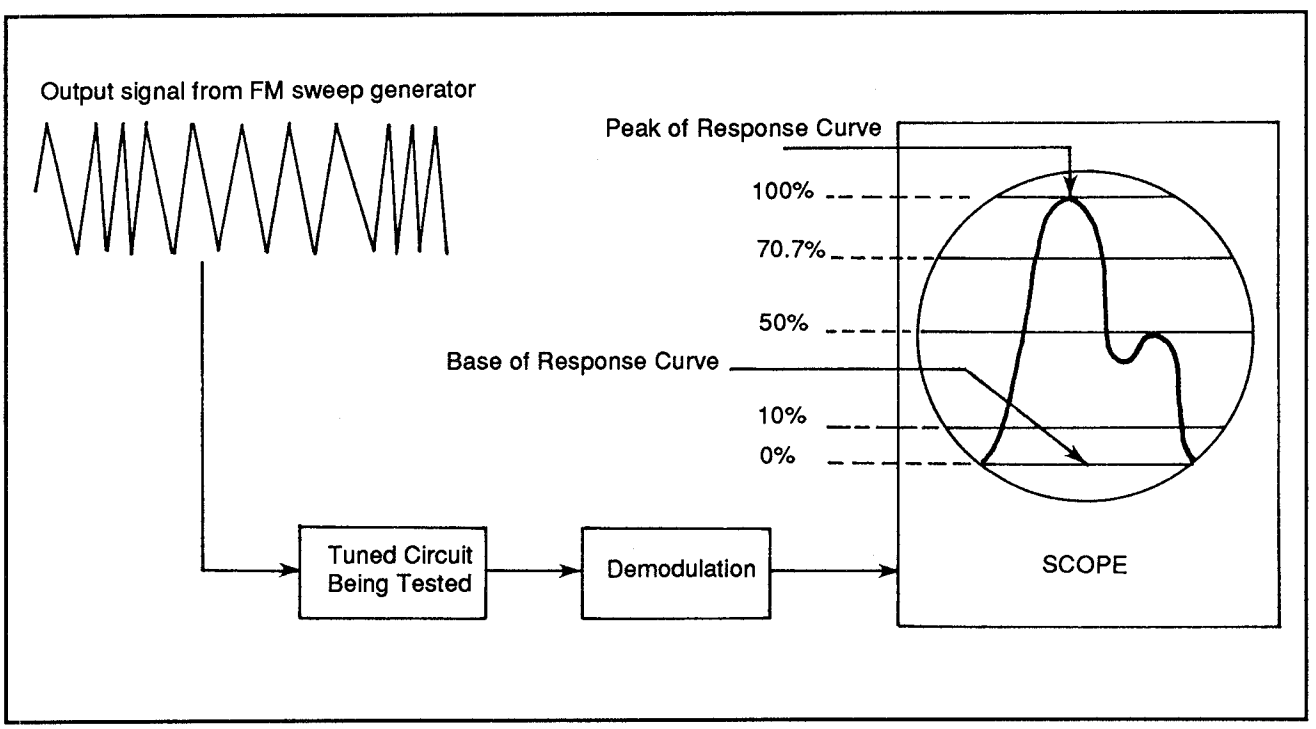

Figure 13: Basic principle of sweep alignment

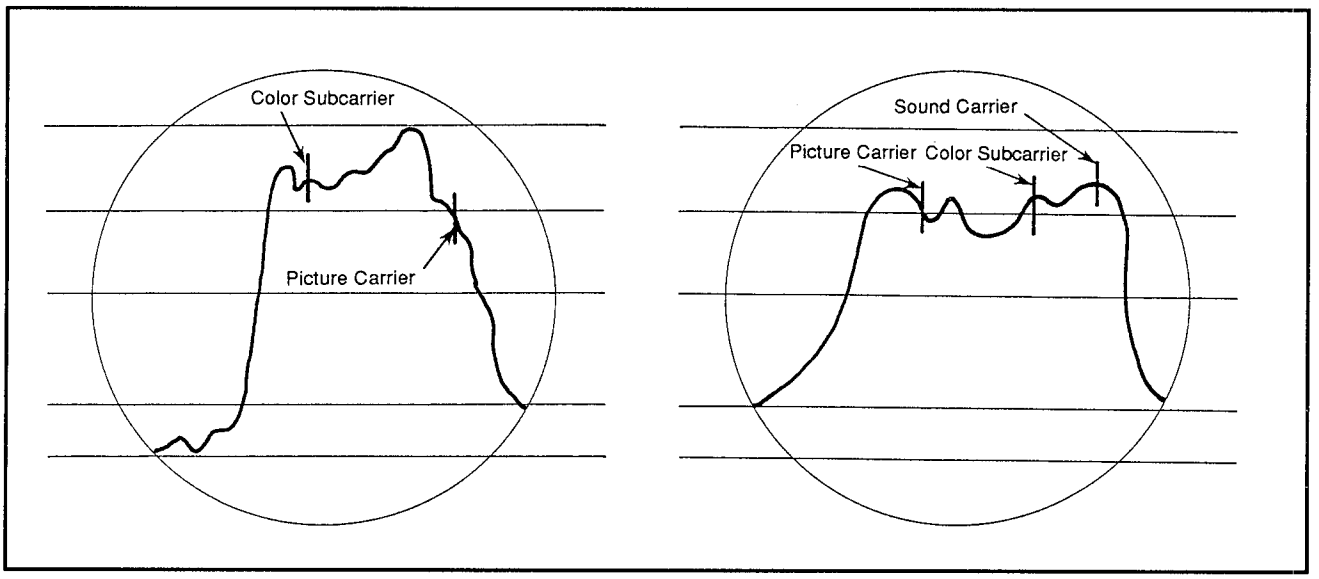

Figure 14: Waveform with beat markers

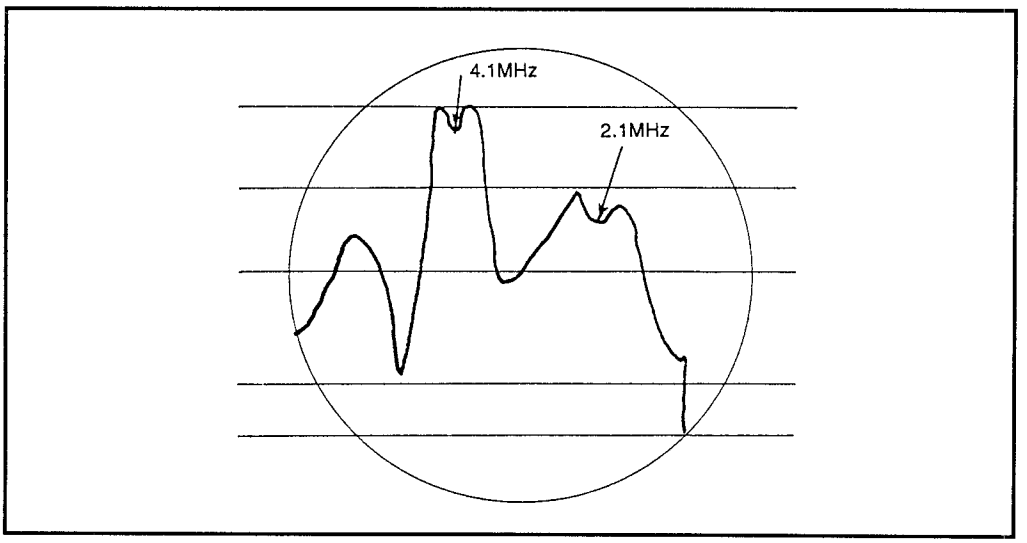

Figure 15: Absorption markers and their characteristic "dips"

signal attenuation or amplification that occurs in the tuned circuits being tested. Some sweep generators provide single markers, while others provide multiple markers. Figure 14 shows a waveform with beat markers. If absorption markers are used, they will appear as "dips" along the response curve, as shown in Figure 15.

Test Charts

Aside from the use of electronic test equipment which can be costly, a cheaper, more desirable method of testing television and video equipment is the use of a test chart. Pattern generators tend to generate these patterns electronically. A variety of test charts are available.

The EIA Color Registration Chart is used to aid the alignment and testing of the pick-up device of a video camera. It could also be used in checking a monitor/receiver performance via input from a good working camera. This chart has very fine horizontal and vertical black lines on a white background which allow for very accurate alignment of the optical and electrical camera systems.

The EIA Resolution Chart is used to measure the resolving power of a system under test. The chart is sent to a monitor/receiver via a camera. Adjusting relative to the scanned area, the horizontal and vertical resolution wedges cover the range from 200 to 800 television lines. The chart may or may not have gray scales. The gray scales are designed to provide logarithmic reflectance relationships. The chart can be used to check resolution, scanning size, linearity, aspect ratio, focus, focus uniformity, shading, transient response and low-frequency phase shift.

The EIA Logarithmic Reflectance Chart has two crossed, nine step gray scales on a 12% gray background, with the scale steps showing a logarithmic reflectance progression from 3 to 60%. Between the two gray scales is a black swatch which is used to calibrate the absolute black of an item. This chart is used to check a camera's transfer characteristic.

The EIA Linear Reflectance Chart is virtually identical to the Logarithmic Reflectance Chart except the two gray scales have a linear relationship to each other.

The EIA Linearity Chart, or Ball Test Chart, is used to test geometric distortion of the camera chain. The inner and outer diameters of the circles are equivalent to 1 and 2% of the picture height. The chart pattern frequencies to be matched are 315 kHz for horizontal and 900 Hz for the vertical directions.

The White Pulse Chart or Window Chart pattern consists of a white box against a black background. It is designed to produce a full dynamic range square pulse on a waveform monitor. The chart is used to adjust image enhancement mechanisms and check system rise times and transient response.

The Color Calibration Chart has three horizontal bars on a black background. The center bar is at a constant 60% white level with the other two bars consisting of

the six saturated colors representing the hues of the NTSC primaries and their complements. When displayed on a vectorscope, these colors will fall within the tolerance boxes when properly calibrated.

Conclusion

Appropriate test equipment and test charts can align equipment properly. Ideally, one should have most of the equipment listed in this section, in addition to standard test equipment. Practically, it is expensive to have everything, so choosing the equipment for your specific needs is difficult.

The latest and cheapest alternative to having a wide variety of specialized television test equipment is to purchase a PC card to be inserted in your personal computer, whether it be an IBM, MAC or Amiga system. Such a card enables the use of waveform, vectorscope and pattern generator for under a thousand dollars.

6/TTV - TR
Troubleshooting and Repair

6/TTV - TR - A
An Introduction

A basic troubleshooting flow chart is shown in Figure 1. To begin troubleshooting, one must decide where the problem is occurring. There are three primary areas in which the problem may be found.

- Picture reproduction is unacceptable
- Sound is unsatisfactory
- Both picture reproduction and sound are unacceptable

Picture Problems

For example, if the picture is the best it has ever been, but the audio output is not what it should be, the problem is not in the video circuitry. Likewise, if the picture rolls but the sound is good, you can be sure the problem is in a part of the video circuitry and not the audio sections. If both video and audio signals are weak, most likely the problem occurs in the signal channel before the sound removal point.

Picture problems suggest that the fault lies in one of three possible areas. These are determined easily by feeding a color-bar pattern into the receiver and viewing the picture.

When normal, you will see a normal set of color bars. If the color reproduction is normal and the black-and-white images are absent or distorted, the problem is due to the lack of the Y component of the signal. The hues will appear dull or muddy, with the absence of black-and-white images. However, if the color portion is absent or abnormal and the black-and-white picture is normal, check the chroma section and not the black-and-white section. The hues of the color bars will be shifted or lack chroma. When both are causing problems, the fault will lie in the signal channel prior to the chroma-takeoff point. The hues will be shifted in phase and the Y component missing.

These problems may be illustrated in a color-bar comparison chart that accompanies your pattern generator.

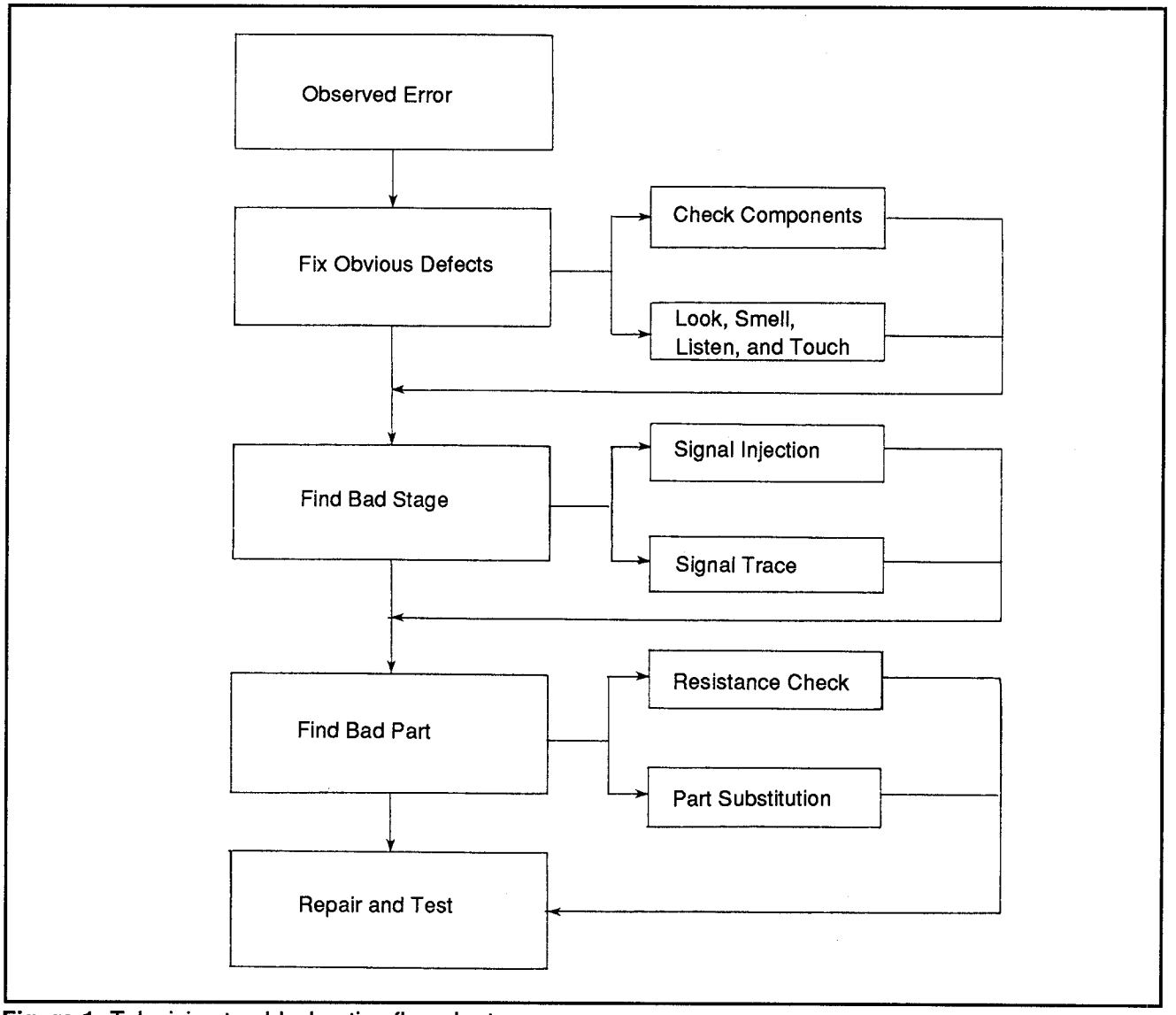

Figure 1: Television troubleshooting flow chart

Picture troubles include:

- Low or excessive contrast
- Low or excessive brightness
- Poor focus, excessive snow
- Smearing
- Ghosting (continued next page)

- Off-center raster
- Negative picture
- Ringing
- Poor sync action
- Incorrect hues
- Color impurity
- Misconvergence
- Interference
- Miscellaneous intermittent conditions

If there is a fluctuation or instability of either the picture or the sound reproduction, the problem is between the intermittent and normal operation.

Testing Procedures

Suitable testing is required to identify and locate a particular problem in a receiver. This testing can be done by either signal tracing procedures, or by signal substitution procedures. Signal tracing is done with the oscilloscope and the signal injection instrument. TV service manuals supply the necessary waveforms and their peak-to-peak voltage values that are found at key test points.

Signal tracing involves locating signals at these test points. A distortion in the waveform and/or improperly displayed peak-to-peak voltage indicates the problem lies within the circuit being tested. An oscilloscope and an appropriate signal injector are used for signal tracing.

A specific receiver service manual has the desired waveform patterns shown for comparison to those you are finding. Also provided are the peak-to-peak voltage values found at key test points in the receiver system. Signal tracing involves waveform checking at these points with an oscilloscope and appropriate pick-up probe. If an incorrect waveform or peak-to-peak voltage is found, it could indicate that the section under test is the section with the problem.

Signal injection allows the receiver's picture tube to be used as the indicator. A certain pattern or signal is injected into the system and viewed on the picture tube. Where there is a problem displayed from the first connection of the main input, you would continue inserting an appropriate test signal, circuit by circuit. An appropriate signal would be something like a color-bar pattern, or a black-and-white test pattern.

TV Standards

Most of the information provided in the television repair section applies whether the unit is black-and-white or color. What you see on a screen came from a composite signal that carries both the sound and video components required to reproduce an acceptable image. Present-day television standards are based on the

National Television Systems Committee (NTSC) standards established in 1953. These standards are used throughout the United States and have been adopted by other countries including Canada, Japan, and Mexico.

Other countries use different systems. France and the Commonwealth of Independent States use the *Sequentiel Couleur avec Mémoire. Phase Alternation Line (PAL)* is used by many European countries including the United Kingdom and Germany.

The NTSC standard maintains a compatibility with existing black-and-white receivers. Monochrome television channels are allocated a 6 MHz bandwidth and the color has to fit within this range. In the near future this may change from 6 MHz to as high as 30 MHz when high-definition television becomes more readily available. Figure 2 shows the television frequency spectrum graph. Note the luminance signal sidebands occupy a signal on either side of the picture carrier.

When the need to keep a compatible system arose, broadcast signals were looked over carefully. Energy in a broadcast signal is not evenly distributed throughout the bandwidth.

There are groupings that occur, called clusters, which tend to appear at certain

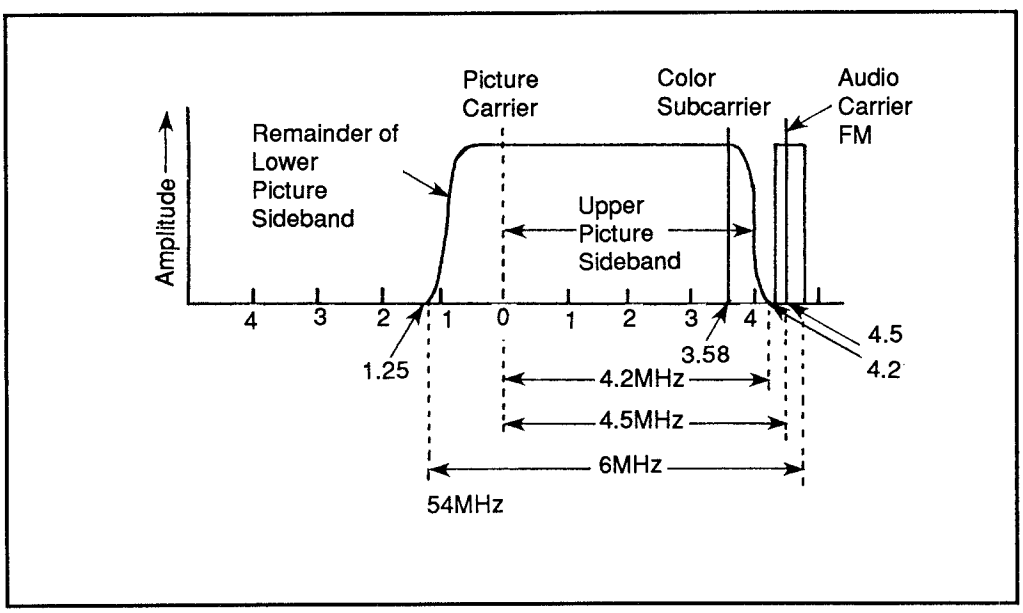

Figure 2: Television frequency spectrum

harmonic intervals of a basic carrier frequency. These clusters in a 4 MHz monochrome video signal appear at harmonic multiples of the basic scanning frequency. In a monochrome signal there are 525 lines of resolution occurring 30 times a second or a scanning frequency of 15,750 Hz.

Each energy cluster occurs at intervals separated by 15.75 kHz within the 4 MHz bandwidth. This is illustrated in Figure 3.

This space between can be used for color signal information and thus the NTSC color information signal is multiplexed, or placed evenly between the monochrome signals. Both a color and monochrome signal will then be multiplexed within a 6 MHz bandwidth.

Figure 4 shows the block diagram of the basic color receiver. There are ten processing stages to produce a picture: RF tuner, video IF amplifier, sound IF, video detector and amplifier, chrominance section, color synchronization section, synchronization separators and AGC circuit, high voltage circuits and the color picture tube and convergence circuits.

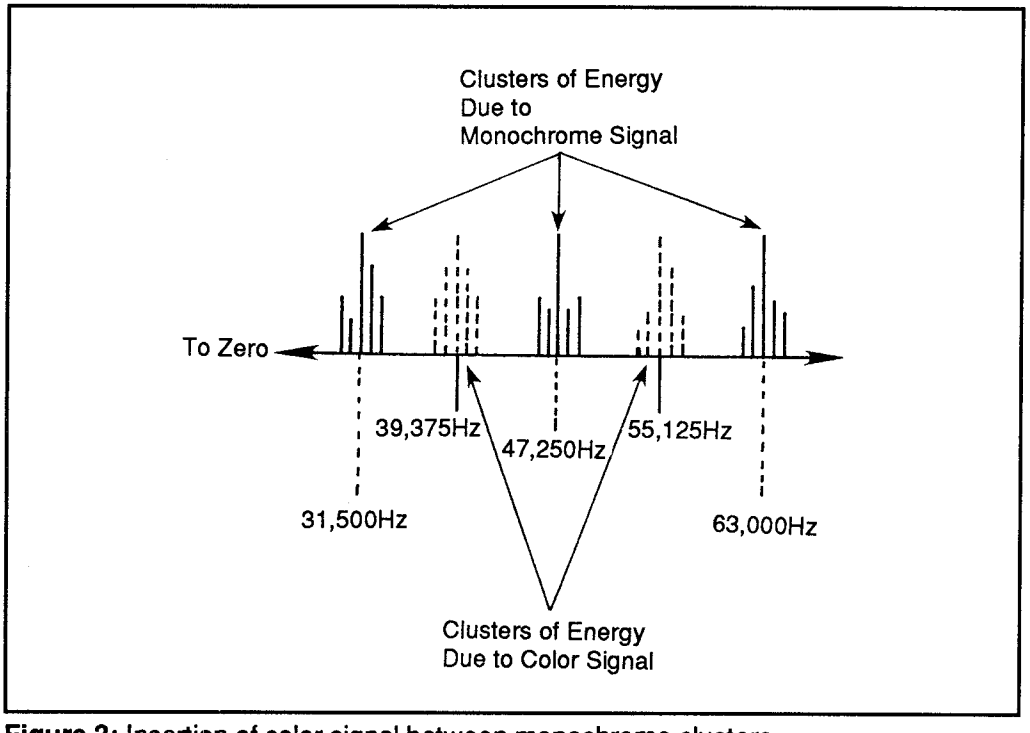

Figure 3: Insertion of color signal between monochrome clusters

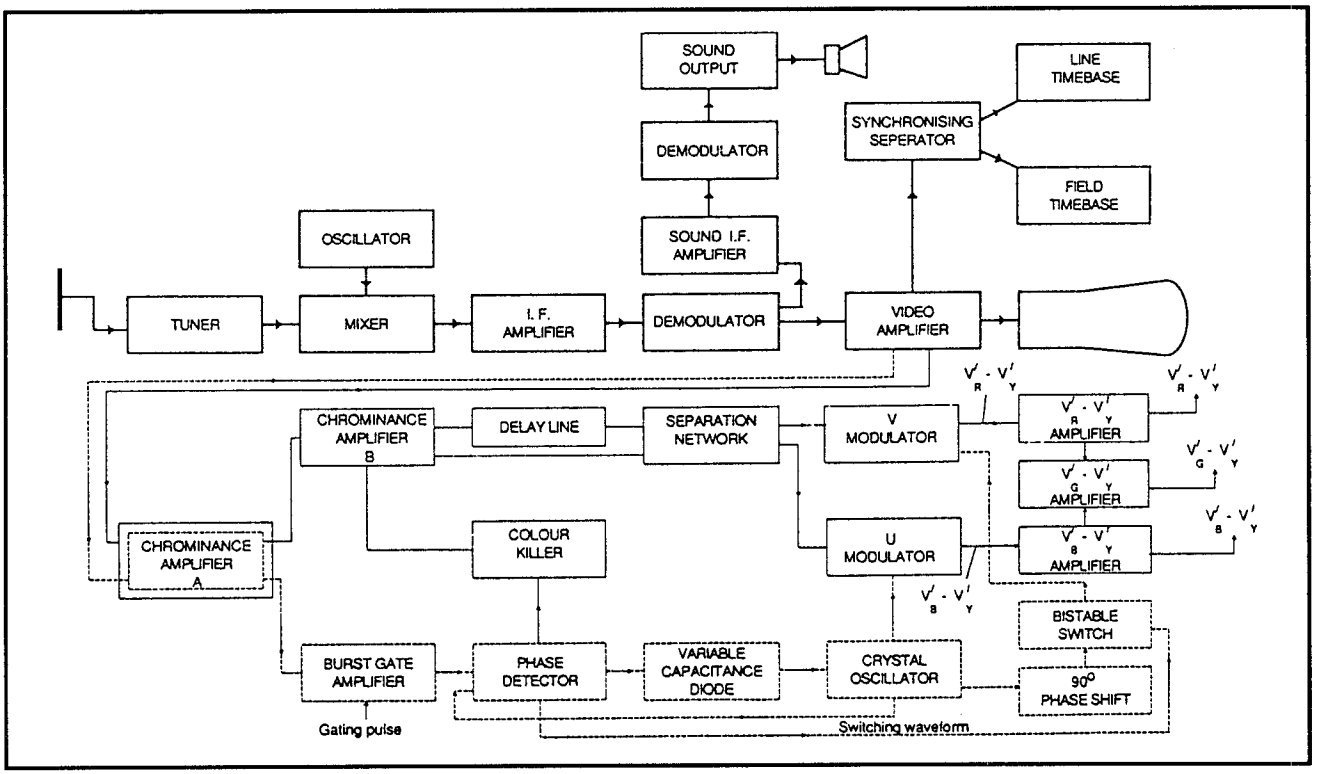

Figure 4: Block diagram of a television receiver

6/TTV - TR
Troubleshooting and Repair

6/TTV - TR - AS
Audio Section

Television audio in a composite video signal is transmitted through the use of frequency modulation (FM). The FM sound is transmitted at 25 kHz below the upper end of the video channel bandwidth. The upper limit for sound is then allowed at the upper limit of a television bandwidth. FM sound for television has an audio bandwidth from 50 Hz to 15 kHz and is transmitted at 4.5 MHz above the RF picture carrier.

The sound carrier travels through a detector to create the intermodulation beat of 4.5 MHz. The intercarrier sound signal is then amplified, limited, and FM demodulated to recover the audio.

Sound IF amplifiers within television receivers have a bandwidth of 50 kHz, centered at 4.5 MHz. Sound IF amplifiers operate with a smaller bandwidth than video IF amplifiers. For the most part, the two sections operate in similar fashion.

Audio travels with sound to the IF stages and is then removed at one of the IF stages. Figure 1 shows a block diagram of a receiver IF processing section. To keep the sound carrier from heterodyning against the video IF, which would cause a 0.92 MHz beat frequency and interference, sound traps are employed. Sound traps reduce the sound carrier to about 5 percent of the video IF amplitude. More than one trap may be employed. The most widely used trap in color recievers is the bridge-T trap. Bridge-T traps employ a resistor to attenuate the signal amplitude. Attenuation factors of 50:1 or 60:1 can be achieved with a bridged-T trap. Any unwanted frequency passing through the trap is reduced to 1/50th or 1/60th of the input amplitude values.

A more efficient trap is a delta, or Y transformation trap. The impedance values Z are chosen carefully to create Z1 of a negative value. The total impedance between points 1 and 2 will be zero if R is equal to Z1. Any undesired frequency is completely eliminated.

Removal of the sound IF is done by the intercarrier sound system. Figure 1 shows a block diagram of this type of circuit. The sound IF is removed by the sound traps. If not removed, a herringbone interference pattern will occur in the video image. The 41.25 MHz sound IF is sent to a sound IF detector.

Output from the sound detector is the 4.5 MHz intercarrier sound IF. This signal is then applied to the sound IF amplifier. The sound IF amplifier increases the signal strength to between 2 and 5 volts so it is able to drive the sound IF limiting circuit.

The sound IF limiting circuit removes an AM interference that tends increase the amplitude of transmitted signals. Also the center FM frequencies tend to increase in amplitude. An AM signal found in the FM signal will cause a distortion of the modulated sound information. Limiters remove the AM interference from the FM signal. After being limited, the 4.5 MHz sound IF is sent to an FM sound detector for demodulation. The demodulator restores the original modulating information.

Demodulators

The FM sound detector demodulates the 4.5 MHz sound IF and restores the 50 Hz to 15 kHz audio information. Modulating causes the FM carrier frequency

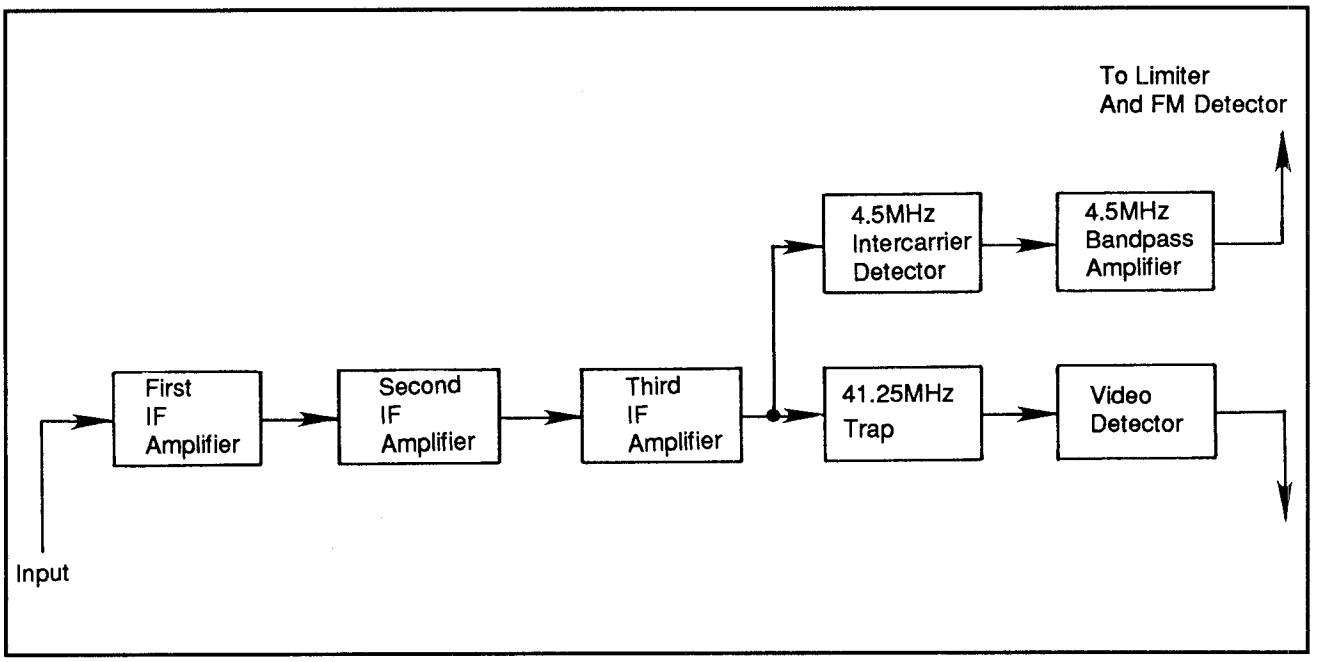

Figure 1: Block diagram of an intercarrier sound system

to modulate from the center frequency at rates equal to the modulation frequencies. The sound detector then recovers modulating frequency information from the rate of deviation. The amplitude of modulating information is obtained from the amount of deviation from the center frequency.

A discriminator circuit is one type of FM sound detector circuit used to generate

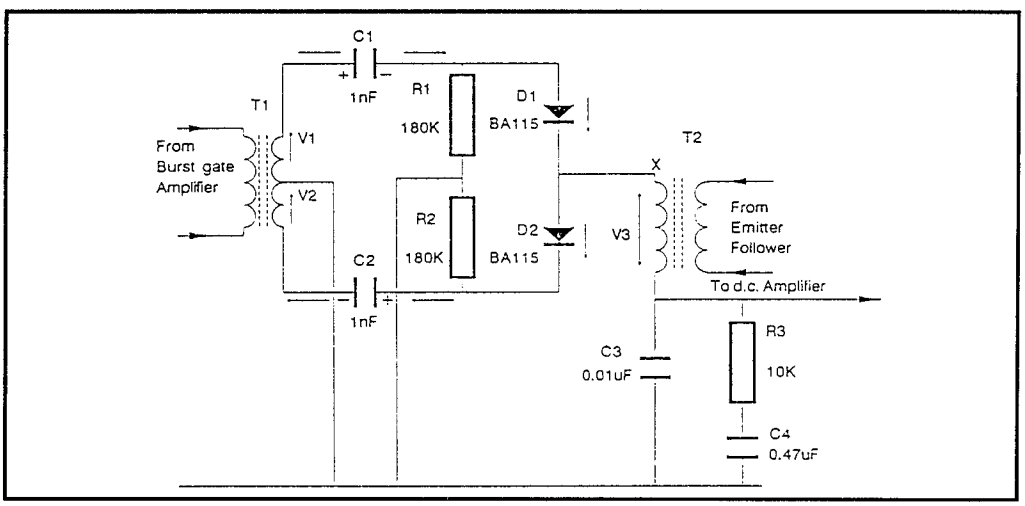

Figure 2: Phase-shift discriminator circuit

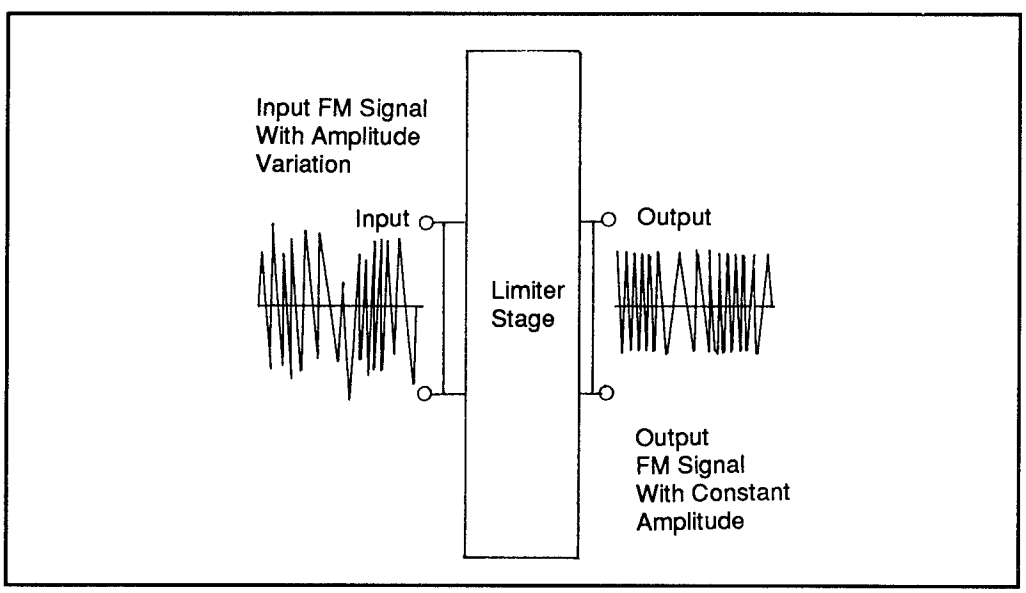

Figure 3: Essential action of a limiter stage

frequency voltages. Figure 2 shows a phase-shift discriminator circuit. Parallel or series resonant circuits may be used in FM discriminators. Both circuits can have capacitive and inductive elements equalized at specified frequencies. A discriminator will take an input FM signal with amplitude variation and output it with constant amplitude as shown in Figure 3.

Discriminators

Discriminators require a deemphasis circuit in the audio output section. FM transmissions are preemphasized at the TV transmitter end in order to allow for an optimum signal-to-noise ratio at the receiver. These signals must then be deemphasized to produce proper tonal balance. Figure 4 shows a circuit that would be used to apply deemphasis to a signal from the FM detector. In an IC-based circuit, this function may be a part of the FM detector, demodulation chip.

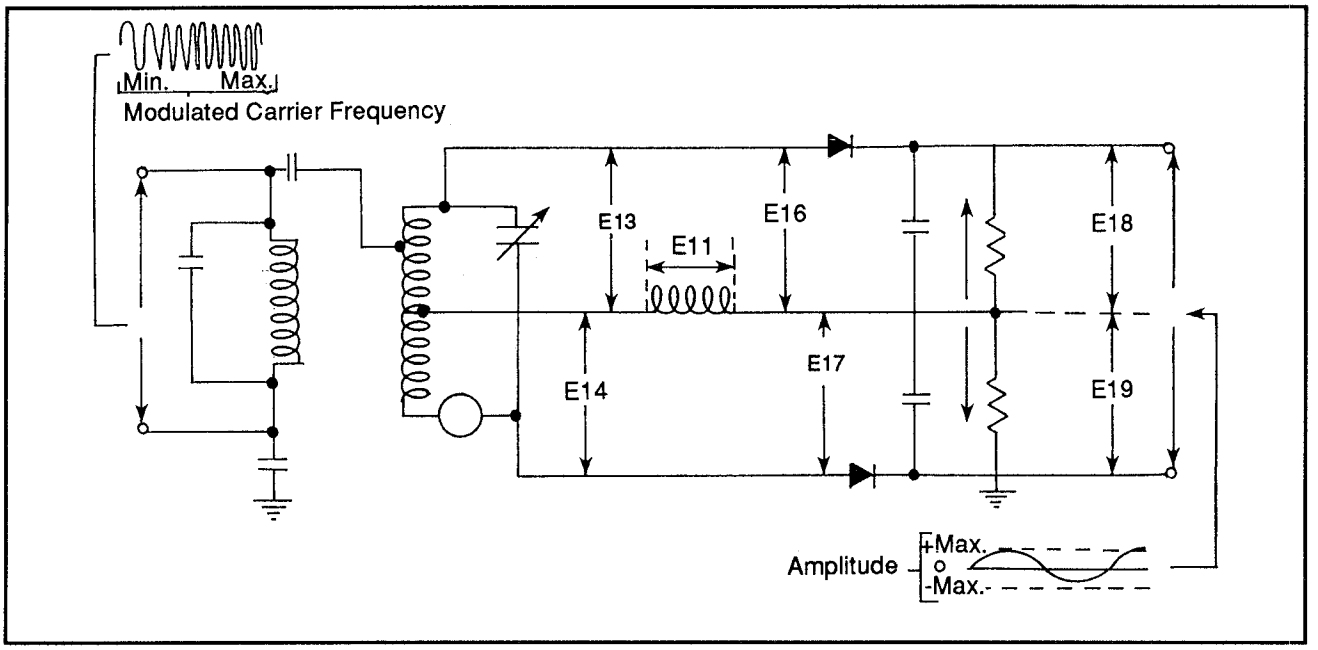

Figure 4: Discriminator circuit

Ratio Detectors

A ratio detector is a form of FM detector that creates audio output in response to the ratio of two developed voltages. In such a circuit, each diode has a completely separate resonant circuit. The resonant frequency of each diode circuit agrees with the ends of the FM IF band. Two output voltages E1 and E2 are found to be equal when the 4.5 MHz is applied through the coupling transformer. If a lower frequency IF voltage is applied to the circuit, E2 will be greater then E1. If a higher frequency IF voltage occurs, E1 will be greater than E2

Any positive or negative signal at an IF frequency other than the center 4.5 MHz will cause an output audio voltage across the resistor R1. When E1 is not equal to E2, the output voltage is sent to the base of the audio amplifier stage via R1. Any amplitude variations present in the signal cannot pass.

Phase-Lock Loop Detector

A PLL circuit uses a variable oscillator to copy the frequency and phase angle of a reference frequency. The phase detector compares the reference frequency with the oscillator frequency. Phase differences produce error signals which indicate the variation from the reference signal. The error signal represents the modulating audio information.

Audio Section Repair

Audio troubles will seldom cause problems in the video picture. Usually if there is a problem in the video related to the audio, the problem will occur before the sound is removed and processed by audio circuits. When normal pictures are being created with poor audio, the problem occurs between the sound take-off point and the output or speaker. Audio problems could involve a complete failure of sound, an inadequate level, distortion, or possible buzzing.

For all but buzzing, the problem will be found in the audio processing circuits. Buzzing is usually caused by a defective tuner, IF amplifiers, video amplifier, or the audio processing section.

Finding audio problems is easiest with the use of a wide-band oscilloscope and a low-capacitance probe. The receiver must be set to a suitable station, or a suitable generator must be providing a signal to trace.

In a normal receiver operation, a 4.5 MHz sine wave pattern is displayed on the scope screen at the input terminal of the intercarrier sound IF amplifier. This signal may vary to a slight degree if not using a signal generator as the source input.

A normal signal amplitude will be about 0.2 V. Each stage up to the FM detector can be checked for the presence of the 4.5 MHz sine wave. If the signal is gone, or substantially attenuated at a particular stage, it will indicate that a defect is within the current testing area.

A buzzing signal will be displayed on a scope by a deep downward modulation or notch. There will be an amplitude modulation by the vertical sync pulse. In excessive sync-buzzing, it is possible that one of the video-amplifier stages is operating in a nonlinear fashion. An overloaded video IF stage or an overloaded

RF stage may cause buzzing to occur. Nonlinear operation will usually be caused by a leaking capacitor or a defective transistor.

Receivers built after 1975 contain very few discrete components. ICs replace major functions of various circuits. Fixing these usually requires replacing defective chips and often complete PC boards.

The first step should be a visual inspection of the problem area. ICs, if socketed, can become loose over time and need to be reseated to work properly. For this, don't just rely on your eyes. With the power off, gently push down on every socketed IC. Look for cracked PC boards, and for areas or components that are burned, leaking, or have an odor.

In case of a nonexistent sound signal, use the oscilloscope to trace the 4.5 MHz signal to the point where it stops. A defective capacitor can cause this to happen. A leaky capacitor can cause a transistor bias to be out of its operating range, and an open neutralizing capacitor can bias a transistor out of its operating range.

After the defective stage is located, DC voltage measurements are generally the most effective way to locate the bad part. In the case of an IC, replacing the entire PC board may be the only way to fix the problem.

Noisy sound output is caused by insufficient limiting. Again, the problem could be a leaking capacitor at the output of the ratio-detector circuit or discriminator circuit. Older capacitors will tend to lose a substantial portion of their rated capacitance and will need replacing. Checking capacitors with a capacitance checker, or replacing a suspected capacitor is best. Also, defective transistors may cause excessive noise, so if the capacitors are correct, try checking the transistors.

6/TTV - TR
Troubleshooting and Repair

6/TTV - TR - BA
Bandwidth Amplifier

Color Problems

The bandwidth amplifier can cause lack of color, washed-out color, excessive color levels, or color smearing. A total lack of color will result in a monochrome picture. Check to see if there are any damaged ICs or transistors, broken wires, or improper adjustment of the color killer or AGC.

Figure 1 shows samples of waveforms that may be found before and after a bandwidth amplifier. By checking both sides of the bandwidth amplifier with an oscilloscope and color-bar generator, one can determine if the problem lies within the bandwidth amplifier. The manufacturer's service manual will give the proper specifications for waveforms and amplitudes.

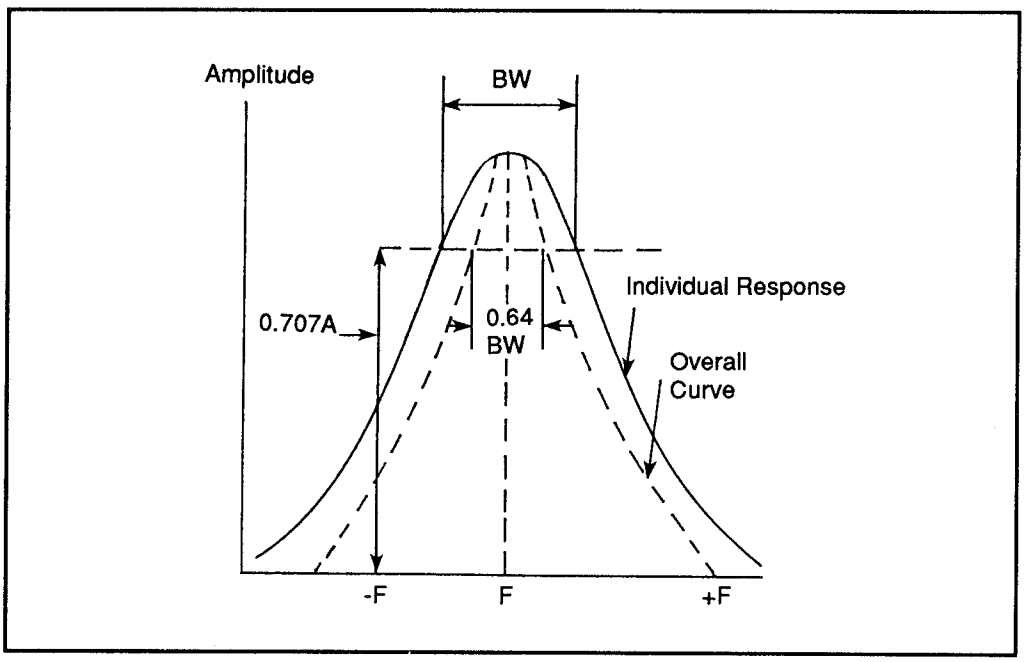

Figure 1: Bandwidth amplifier waveforms

6/TTV - TR
Troubleshooting and Repair

6/TTV - TR - CPT
Color Picture Tube

Operating Conditions

For a color picture tube to operate, voltages up to 30,000 with a maximum current of 1.5 mA are required. The focus voltage requires ranges from 5,000 V to 8,000 V. The high-voltage load must be maintained at a constant value, as great changes in beam current can affect scanning response and other picture-related operations.

Components

The picture tube consists of a surface coated with phosphors. Three electron beams energize separate red, blue and green phosphors on the inside screen surface. Each dot is surrounded by a barrier called a surround, which prevents the bleeding of colors with one another. The three electron beams will energize only those phosphors to which they have been assigned.

A convergence circuit and convergence magnets ensure the accurate positioning of the separate electron beams. The convergence magnets are placed around the

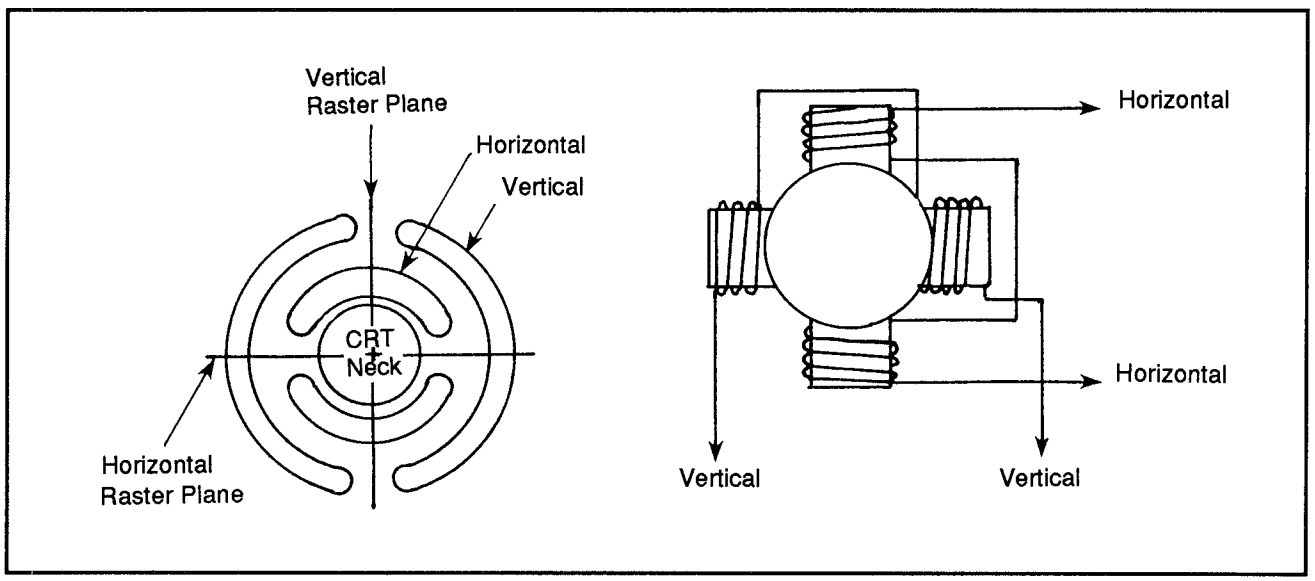

Figure 1: Toroidal yoke windings

picture tube neck and aid in minor corrections for misalignment and magnetic misalignment.

Each set of phosphors, red, green, and blue are arranged in groups of three or triads. There are more than 300,000 triads on a single picture tube. Each triad measures approximately 0.016 inches in diameter. Energizing a triad with each dot at a certain percentage will produce a color.

Yoke

About the neck of the picture tube will be a deflection yoke which consists of two sets of coils. One set is for vertical deflection and the other for horizontal deflection. The yoke is mounted around the neck of the picture tube's smaller end, where the electron gun connections are located. When power is applied, the coils produce a strong magnetic field that deflects the electron beams. Figure 1 shows a toroidal yoke found in most color receivers.

The windings for a toroidal yoke are wrapped around a torrid, or doughnut-shaped structure as shown in Figure 1. This is a very efficient deflection yoke configuration producing a strong magnetic force with minimal loss.

6/TTV - TR
Troubleshooting and Repair

6/TTV - TR - DC
Deflection Circuits

Vertical Deflection Circuits

A vertical deflection circuit is shown in Figure 1. Problems in the vertical deflection can cause a loss of vertical deflection, improper height, improper vertical linearity, loss of vertical sync, or keystoning. These symptoms are illustrated in Figure 2.

A loss of vertical deflection will cause a raster to be displayed in a single horizontal line. The line will be extremely bright because all information for the entire picture will be found within it. This could cause permanent damage to the phosphors of the picture tube.

To trace the problem, a signal injection with a 60 Hz input is needed. Tracing begins at the vertical oscillator output. Trace the signal through the vertical

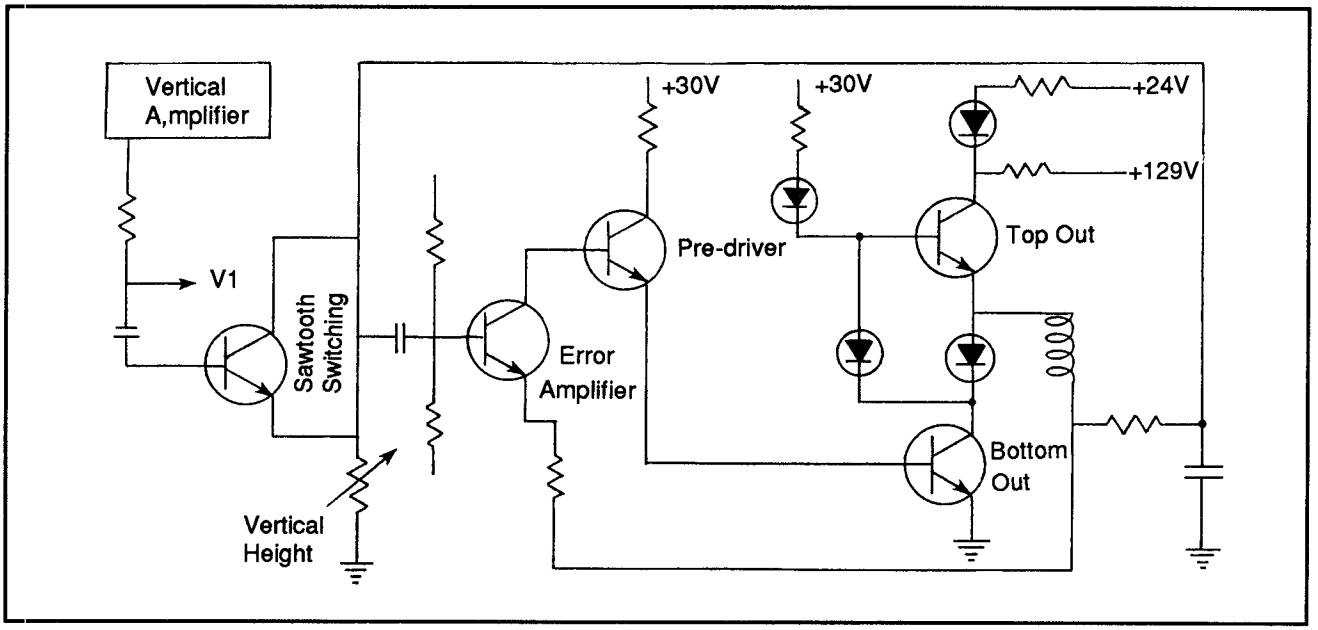

Figure 1: Vertical deflection circuit

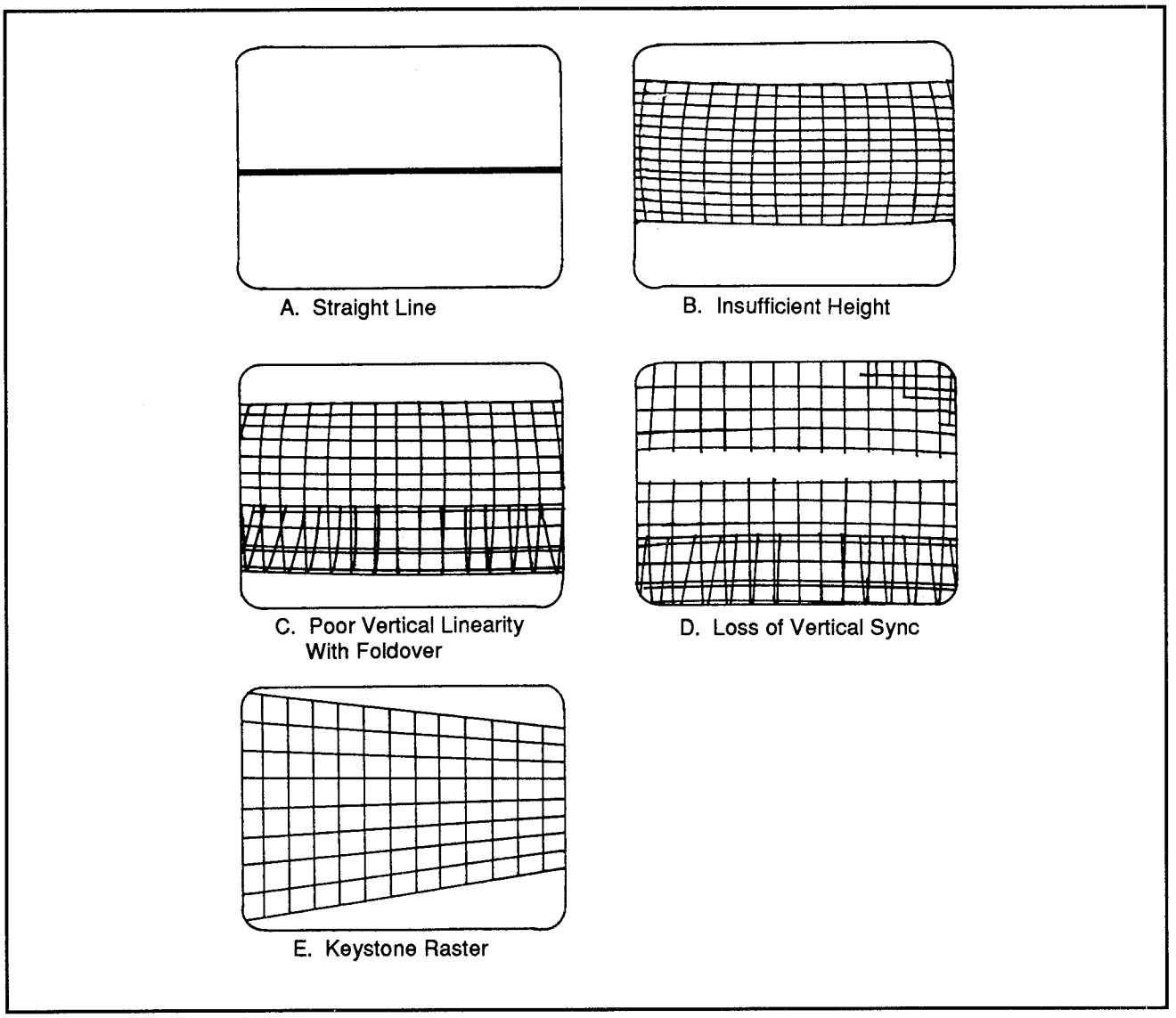

Figure 2: Video problems caused by vertical deflection malfunction: (a) loss of vertical deflection (b) improper height (c) improper vertical linearity (d) loss of vertical sync (d) keystoning

deflection amplifier. The point where the waveform is lost indicates the defective part.

Signal injection with transistor or IC stages will require a signal source with a low internal resistance and adequate output current. The source needs a DC blocking capacitor to prevent unwanted DC changes from affecting transistor operation. Signal injection begins at the output stage. A proper raster display occurs when the signal is injected. Proceed backwards through the stages to the

oscillator. When the signal does not produce a proper raster, the problem stage will have been found. Voltage and resistance checking and part substitution can then be used to fix the defective part.

A receiver with multivibrator vertical deflection circuitry that is having vertical deflection problems indicates the circuit is not oscillating. No waveform monitoring or voltage checking is possible and the section will have to be corrected by substitution.

A picture squeeze will occur if the peak-to-peak amplitude of the sawtooth waveform decreases. The overall linearity will be satisfactory, but the vertical height is less than desirable. A misadjusted height and/or linearity control could be the cause of this problem. A defective IC, shaping circuitry, or decreased amplification are areas that may cause a squeezing effect. Signal tracing can be effective with receivers that have separate vertical oscillator and amplifier stages.

Improper vertical linearity is produced by a nonlinear vertical deflection sawtooth wave. The picture may appear compressed at the bottom or top, or appear folded over, or overlapping. Improperly adjusted linearity and height control can cause vertical linearity problems, as well as a defective IC circuit, changes in transistor bias due to a leaky capacitor, changes in the RC time constant, or a defective output transformer.

Horizontal Deflection

If the horizontal deflection circuits fail there will be no raster. The picture tube will be blank because the second anode voltage is created from the horizontal output stage. To troubleshoot horizontal deflection problems, use an oscilloscope and observe the input and output horizontal oscillator.

Horizontal oscillator frequency changes are created by several problems. Frequency changes in horizontal oscillator circuits with ringing coils may be created by open capacitors, leaky capacitors, defective coils, or misadjusted coils.

Checking a horizontal oscillator circuit with a ringing coil is done by using a jumper wire to short-out the tuned circuit. If the picture returns to normal, the tuned circuit is bad. If the problem is not fixed, each component must be checked.

Improper linearity of a horizontal oscillator includes poor picture linearity at the left and right sides of the picture. The drive lines may appear in the center and to the right of center. A defective IC circuit or transistor bias caused by leaky capacitors may be the cause. The input and output waveforms and voltages should be checked to isolate the problem.

The transistor and IC peak-to-peak voltages for the horizontal oscillator output range from 2 V to 20 V. A drop in voltage will cause the horizontal output to be reduced. The condition for this is a narrow, darkened image. A low supply voltage, open sawtooth capacitor or defective coupling capacitor may be at fault.

6/TTV - TR
Troubleshooting and Repair

6/TTV - TR - FPC
Frequency and Phase Control (Automatic)

Color Problems

The automatic frequency and phase control (AFPC) section can cause color problems as well as loss of sync. Sync loss in an AFPC circuit occurs from a faulty oscillator. The oscillator continues to function, but phase changes or drifts during operation. Figure 1 shows this circuit.

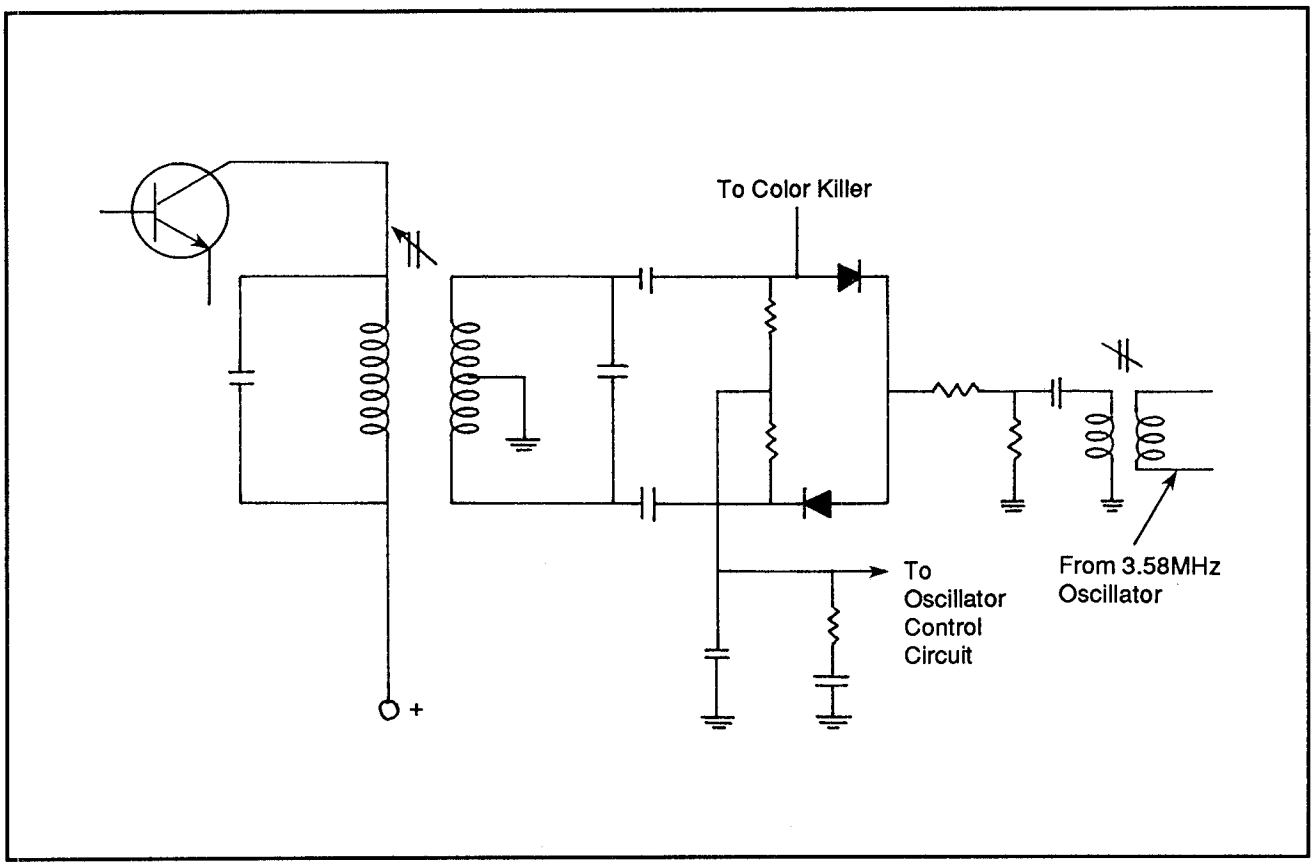

Figure 1: AFPC and phase detection

Noticeable signs of phase drift may be indicated by several different responses. The 3.58 MHz oscillator may be too far off frequency to respond to control adjustments. If so, the color demodulator stages cannot produce proper output signals. An oscilloscope is needed to see if the color oscillator is producing a correct 3.58 MHz output signal. The phase detector may also cause the color killer section to misfunction.

If either the burst gate or the phase detector is defective, the DC voltage which turns off the color killer is not sent. An oscilloscope can be used to check AFPC functioning as indicated in the manufacturer's service manual.

Also, there could be a defective burst gate that does not provide a color burst to the phase detector.

6/TTV - TR
Troubleshooting and Repair

6/TTV - TR - IFA
IF Amplifier

The IF stages of a television signal processing section are fixed-tuned to a single IF frequency. Both the video and sound IF signals travel together through the IF amplifiers. The IF amplifiers need to have a bandwidth of at least 4.5 MHz. The bandwidth may be achieved by stagger tuning multiple amplification units. Staggering is when different amplifier circuits are tuned to slightly different frequencies allowing for a wider bandwidth.

Amplifier Stages

There are three or four separate amplifier stages in a color video IF processing section. Figure 1 shows a typical block diagram of a typical video IF system. By amplifying the signal in stages, the amount of distortion of IF signal waveforms is reduced. This also allows for staggered tuning to create the wider bandwidth.

IF amplification stages range from 41 MHz to 46 MHz. Traps through the circuits are used to attenuate transmission of the video carrier of the next higher channel, sound carrier of the current channel, and sound carrier of the next lower channel. The attenuation of adjacent channel information is usually in the range of 55 to 60 dB.

To ensure that the color subcarrier and all the related sidebands are included, the IF frequency response curve is about 4.3 MHz wide at the 50% amplitude points.

Selectivity

The most important feature of the IF amplifier is selectivity. Selectivity is the process of allowing only the desired frequencies to pass while rejecting all others. Connected to the last video IF amplifier is the video detector processing stage. In this stage, the video carrier signal is heterodyned against its sidebands. The resulting beat frequencies are made of the original modulating information.

After video detection, the brightness portion of the signal is amplified. The color burst is sent to the color-synchronization circuits to reconstruct the color subcarrier. The synchronization separator and automatic gain control sections are integrated with the signal-processing circuits. The color sidebands are separated from the signal and sent to a separate chrominance processing stage.

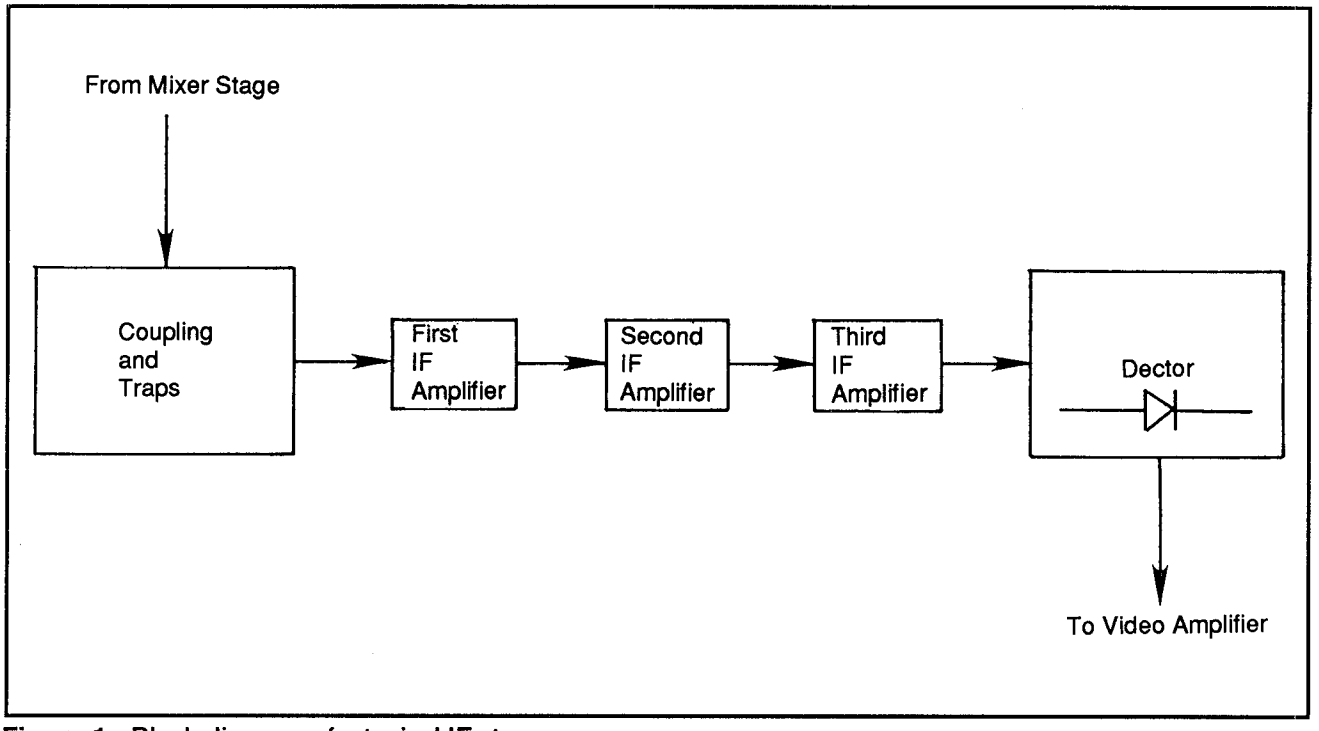

Figure 1: Block diagram of a typical IF stage

Problems in the video IF signal amplifier may cause, in all cases, a normal raster coupled with an overloaded or negative picture and buzzing in the sound output, a washed-out color or weak monochrome picture and weak sound, no picture but normal sound, or no picture or sound.

Missing Sound

Sound may be missing depending on where the error occurs in the IF circuit. If the sound is removed before the error occurs, the sound will most likely be passed correctly. In a color receiver, the sound is pulled from the second or third IF amplifier. This may help in localizing which circuit or circuits are at fault. If there is no sound or picture, the problem will be an open signal path. The problem may be in the tuner as well as in the IF amplifier. The tuner should be checked first to see if a signal is being passed to the IF circuits. If there is a signal but no picture and sound, the problem lies in the IF circuits.

An IF circuit can be damaged if the AGC system is defective. Without proper AGC the IF stages can be driven to complete saturation.

Weak sound and picture, overload, or negative picture and buzzing indicate

different IF problems. These problems usually stem from an improper AGC applied to the final video of the IF amplifier stage. To check the AGC, a substitute bias clamping DC voltage for the AGC control voltage is used. The manufacturer's service manual will indicate the correct application points and correct voltages to use.

If the alignment of video IF stages changes, picture and sound can be affected. Improper alignment of these stages may cause intercarrier buzzing in sound output, an abnormal horizontal or vertical sync of the picture display, bars in the picture produced by sound, lack of color, some forms of ghosting. To check the alignment of the IF, adjust the fine-tuning. If correctly adjusted, the fine tuning should only cause minor changes in the overall picture.

Major changes in fine-tuning indicate that there is an alignment problem. If the picture weakens, overloads, smears or increases ghosting, the video IF amplifier response curve has been altered. A misaligned IF trap or IF strip can create washed out colors and poor color fit.

Changing the shape of the IF response curve may cause other problems to occur. Picture smearing, color loss, horizontal and vertical sync, and ringing may occur with a loss of low-frequency response.

Ringing

Ringing occurs when excessive gain is created by the IF amplifier. This ringing, or ghosting, will show up on an oscilloscope as several peaks at the regenerative frequencies. The fine-tuning control will change the number, position and intensity of the ghosting patterns.

To check for ringing, simply attach a pattern generator to produce a crosshatch display on the screen. The vertical lines are produced by the high-video frequencies and the horizontal lines are produced by the low-video frequencies.

Adjust the fine-tuning so the horizontal and vertical lines are equal in intensity. Any ghosting or ringing will be seen to the right of the vertical lines. Adjusting the fine-tuning will cause the ghosting to change position and number. For this test to work, the picture carrier must be positioned at the proper 50 percent gain point on the IF response curve.

Ringing or ghosting can be caused by video IF misalignment, defective tuned circuit, defective amplifier transistors, open IC damping resistors, improper placement of components, removed or disconnected shielding, open capacitors, or open or shorted AGC filter capacitors.

6/TTV - TR
Troubleshooting and Repair

6/TTV - TR - PS
Power Supplies

Picture and Sound Problems

The root of many problems stems from a power supply that is defective or improperly adjusted. A drop or loss of supply voltage can cause multiple symptoms that affect the picture and sound in a receiver. Possible indications may be a screen with no raster, weak sound or no sound, repeatedly blown fuses, incorrect raster size, brightness, linearity problems and even humming in the sound output. Components that have changed in value can cause these problems. Circuits that do not cause blown fuses or opened circuit breakers are usually caused by open components. Shorted or leaking components cause overheating or excessive current flow that should blow fuses and circuit breakers. Standard power supply checking is the best method for locating problems.

Weak Sound

Weak sound or a complete loss of sound may indicate a defect in the filter network. There may be defective capacitors or resistors or changes in the specifications for these components.

Humming

Power sections with defective rectifier diodes, open or leaky input filter capacitors, defective regulators, or defective zener diodes may cause the picture raster to shrink, to be darker, or have poor linearity. There will usually be a humming associated with these problems. These occur with a reduction in supply voltage.

Crosstalk

DC ripple can cause several receiver problems, like crosstalk, if the power supply is not filtered properly. Crosstalk happens from stray electromagnetic or electrostatic coupling of energy from one circuit to another.

6/TTV - TR
Troubleshooting and Repair

6/TTV - TR - T
Tuner

Channel Allocation

The tuner selects and processes a channel frequency. Television tuners can process channels 2 through 13 on VHF, and channels 14 through 69 on UHF. This corresponds to frequencies between 54 MHz to 88 MHz with a gap between 72 and 76 MHz for low-band VHF channels 2 to 6, 174 MHz to 216 MHz for the high-band VHF channels 7 to 13, and 470 MHz to 806 MHz for the UHF frequencies. Originally the spectrum included channels to 83. Channels 70 to 83 have been reallocated to cellular phone and high-band FM CB radio. Some stations still operate within this spectrum, but will slowly be phased out of operation or relocated before the year 2000.

Table 1 shows channel allocation frequencies needed for tuner repair.

RF Section

The tuner is also considered to be the RF section, or front end, of a video receiver. The tuner contains an RF amplifier, an oscillator and a mixer stage.

The RF amplifier boosts the signals received by the antenna. The level amplified is dependent on how weakly the signal is received. A weak signal needs more amplification than a strong one and is determined by relative signal strength. The formula for this is:

$$rss = \frac{1}{(\text{relative distance})^2}$$

AGC Circuit

This amplification is controlled by an automatic gain control (AGC) circuit which outputs a constant level and decreases that level when a stronger signal is received. The AGC processes both video and sound signals.

A failing or misaligned AGC section can cause the RF tuner, IF stages, video detector and video amplifier to appear defective. The AGC is composed of a pulse generator and coupling system, an input system from which AGC DC voltages are created, and an output network that applies control and delay voltages to RF and IF amplifiers.

Table 1 Channel Allocation Frequencies

Channel	Frequency	Channel	Frequency	Channel	Frequency
2	54-60	25	536-542	48	674-680
3	60-66	26	542-548	49	680-686
4	66-72	27	548-554	50	686-692
5	76-82	28	554-560	51	692-698
6	82-88	29	560-566	52	698-704
7	174-180	30	566-572	53	704-710
8	180-186	31	572-578	54	710-716
9	186-192	32	578-584	55	716-722
10	192-198	33	584-590	56	722-728
11	198-204	34	590-596	57	728-734
12	204-210	35	596-602	58	734-740
13	210-216	36	602-608	59	740-746
14	470-476	37	608-614	60	746-752
15	476-482	38	614-620	61	752-758
16	482-488	39	620-626	62	758-764
17	488-494	40	626-632	63	764-770
18	494-500	41	632-638	64	770-776
19	500-506	42	638-644	65	776-782
20	506-512	43	644-650	66	782-788
21	512-518	44	650-656	67	788-794
22	518-524	45	656-662	68	794-800
23	524-530	46	662-668	69	800-806
24	530-536	47	668-674		

If the problem lies in the AGC circuit, use bias clamping voltage to decide if the AGC outputs are causing problems in the video IF amplifiers. If the receiver is otherwise operating properly, the AGC circuit could be bad.

AGC defects will cause no picture and/or sound, a weak picture and/or sound, and overloading or a negative picture with possible buzzing.

To determine if the problem is in the AGC circuit, you must apply bias clamping voltage to the AGC common or bus connection, use an oscilloscope and demodulator probe to check the output of the last video IF stages, and scope the output of the last video IF stage. The manufacturer's specifications will aid in this approach.

AGC circuits use synchronizing pulse amplitude rather than overall video signal amplitude to create a DC control voltage. An overall video signal amplitude would cause the picture brightness to vary in relation to the signal being

amplified. The output DC control voltage is sent to the RF and IF amplifiers. For the amplifier and other signal processing circuits to work properly, they need to operate on specific frequencies known as intermediate frequencies (IF). Sound IF is 41.25 MHz and video IF frequency is 45.75 MHz.

IF frequencies are created by an oscillator that heterodynes the incoming RF signals. Heterodyning is a process of combining two frequencies which alternately reinforce and cancel the other's waveform.

IF Frequency

A video receiver uses the difference between the tuner oscillator and the TV channel frequency as its IF frequency. Any other frequencies created by

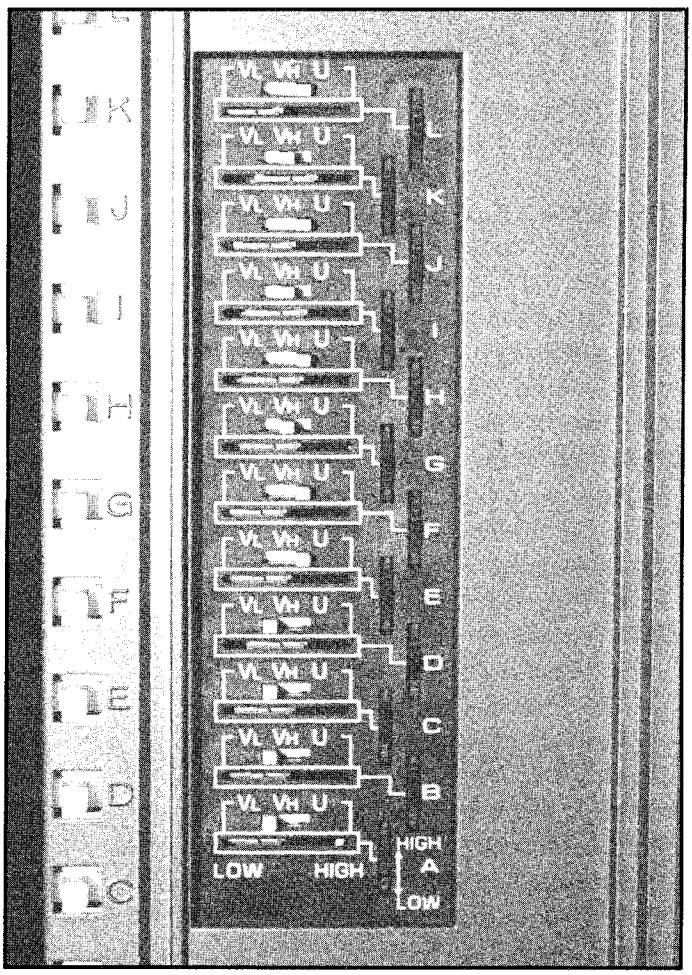

Figure 1: Wafer tuner

heterodyning are rejected by the tuned circuits at the mixer output and IF amplifier.

The oscillator frequency to generate the required 45.75 MHz video IF and the 41.25 MHz audio IF must be changed in accordance with the channel selection. The frequencies must be 45.75 MHz above the video carrier. For example, if the tuner is set to channel 12, the picture carrier is at 205.25 MHz, so the oscillator must be at 251.0 MHz. The audio IF must be 41.25 MHz above the audio carrier which, for channel 12, is 209.75 MHz, so the sound IF oscillator must be at 251 MHz.

Modern receivers use automatic fine-tuning (AFT) circuitry to maintain an accurate signal and adjust the oscillator accordingly.

Tuners in televisions can be either mechanical, electrical mechanical, or electronic. Mechanical tuners are found in cheaper or older television receivers. Mechanical tuners are either wafer-type or turret-type.

Wafer Tuner

A mechanical wafer tuner uses thin, flat, wafer-shaped nonconductive bases on which coils and switches are mounted.

A sliding switch contacts the inner metal plate connected to the coils. As the tuner shaft is rotated, it increases or decreases, the number of coils that are shorted. As the inductance L value in an LC circuit increases, the circuit's resonant frequency allows the tuning of VHF low-band channels 2 through 6. VHF high-band channels 7 through 13 are tuned by portions of a stamped metal inductance ring which are shorted in a similar fashion.

Turret Tuners

A mechanical turret tuner, as shown in Figure 2, has removable grouped sets of precisely tuned coils arranged in a rotating circular fashion. When changing channels, turret tuners have a better ability to tune the same frequency accurately and repeatedly than wafer-type tuners.

Mechanical Electronic Tuners

In a mechanically switched electronic tuner, a group of about 16 to 20 variable resistors are connected between a constant voltage source and ground. The voltage drops generated by the resistors are applied to the tuner varactor diodes. Each resistor is adjusted to produce a specific voltage and is selected by either a push-button system, or rotary-switch system.

Varactor diodes produce varying amounts of capacitance in tuner circuits. As there is an increase in reverse bias, a varactor produces less capacitance. This increases the resonant frequency of an LC type.

A switch selects the amount of reverse bias voltage which then determines the channel selected for viewing. Each switch position is connected to a different variable resistor for discrete channel selecting. A varactor diode and capacitor create the resonant circuit. Another capacitor is used to isolate the varactor diode from DC potential and provide an AC ground.

Electronic Tuners

Many TVs today employ IC tuner sections. A single IC can perform all or part of the tuner functions. The use of an IC for tuning is more reliable and cheaper. Figure 3 shows a block diagram of an IC-based tuner circuit.

Different types of electronic tuners can be created that will electronically create varactor reverse bias voltages. Some types employ digital switching, memory storage, and phase-locked look tuning.

A digital switching tuner offers a numeric keypad for input of the desired

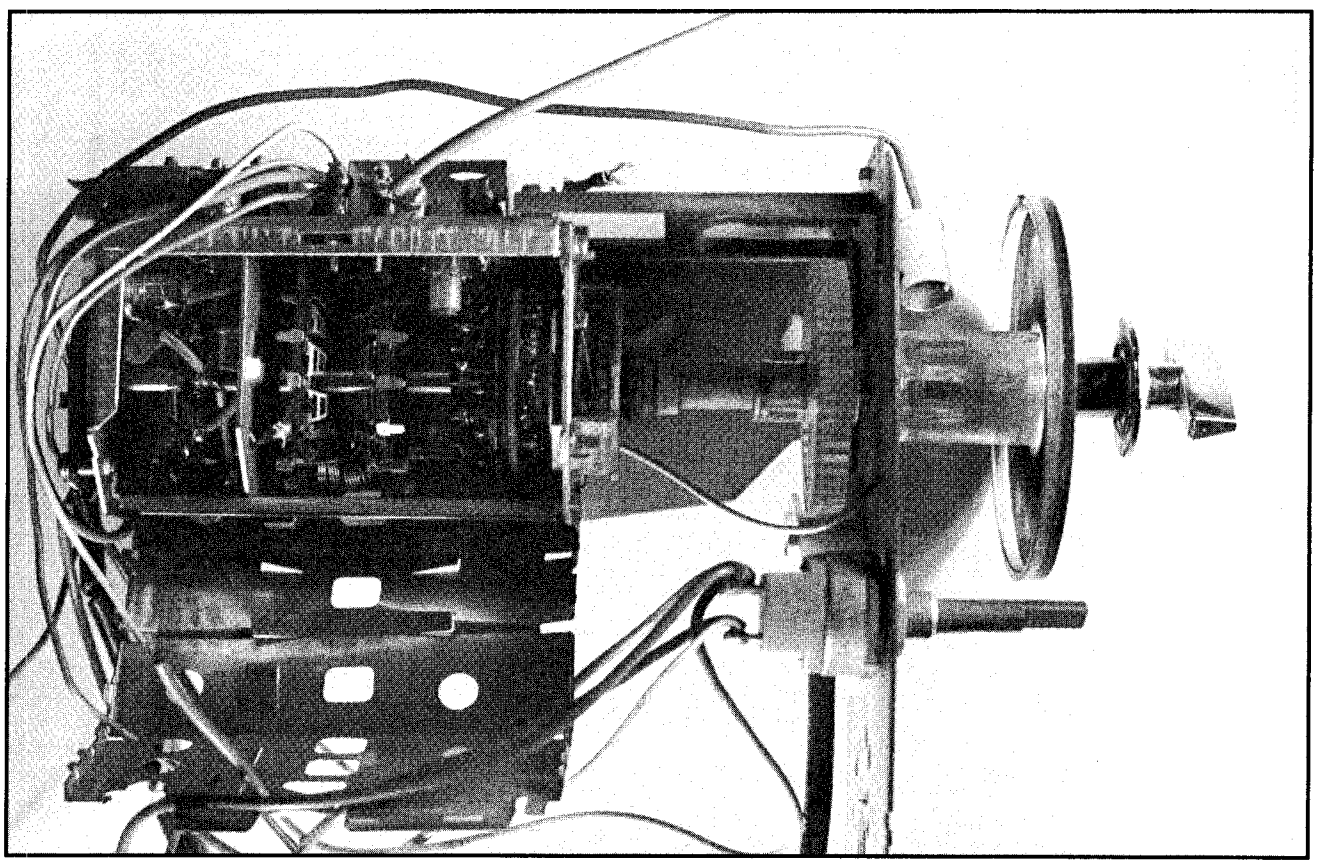

Figure 2: Mechanical turret tuner

channel. The signal from the keypad is applied to a digital logic processing unit. A digital logic processing unit uses binary signals and mathematical logic to create the outputs applied to tuning circuits.

A memory storage device has digital equivalents of varactor bias voltages stored within. When a channel number is entered, the stored information for that channel is read and sent to the tuning circuits.

Phase-locked loop (PLL) tuning uses an electronic feedback system to sustain an extremely accurate varactor bias voltage. To do this, a PLL circuit compares phases of the output varactor tuning frequency and a digitally divided reference

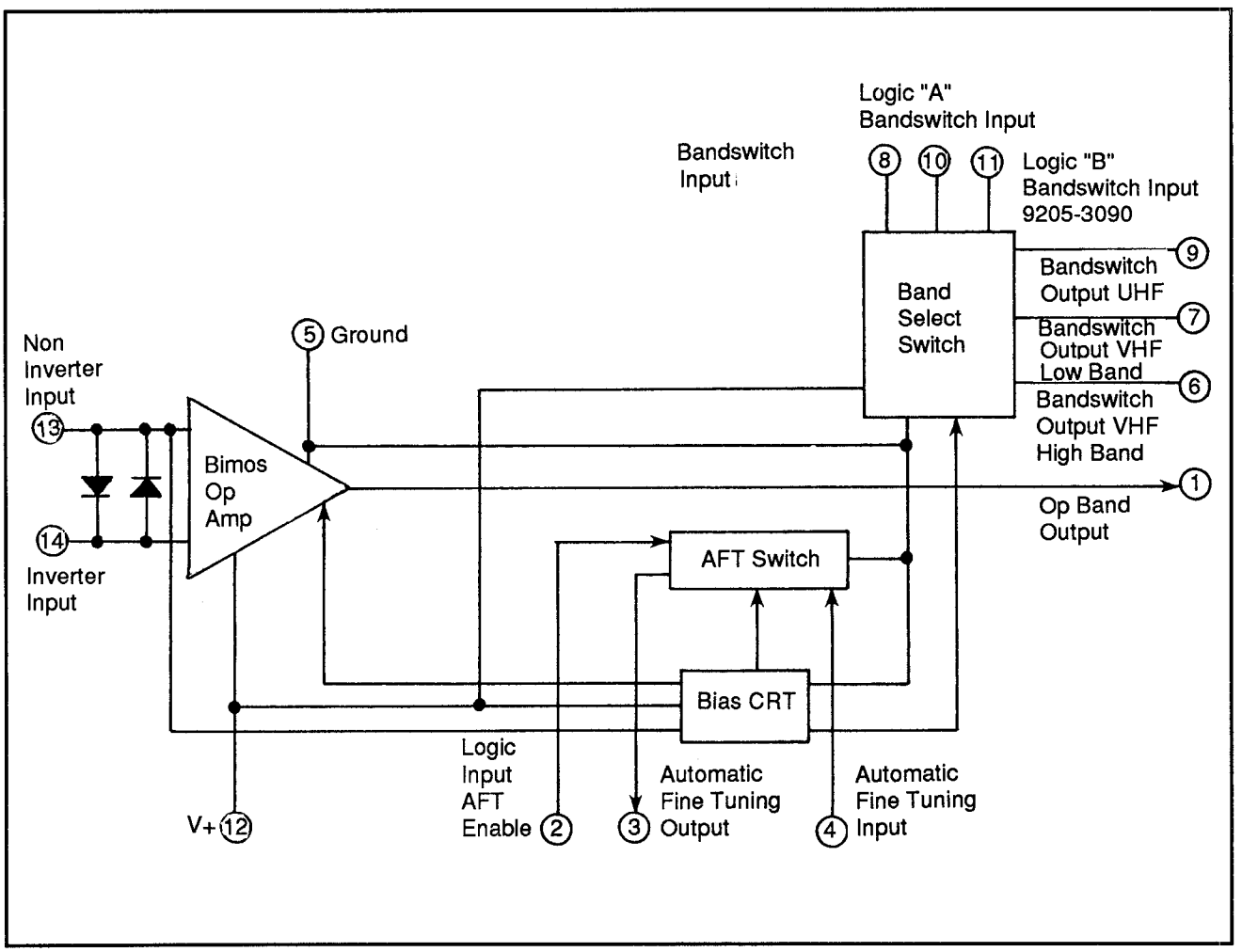

Figure 3: IC tuner block diagram

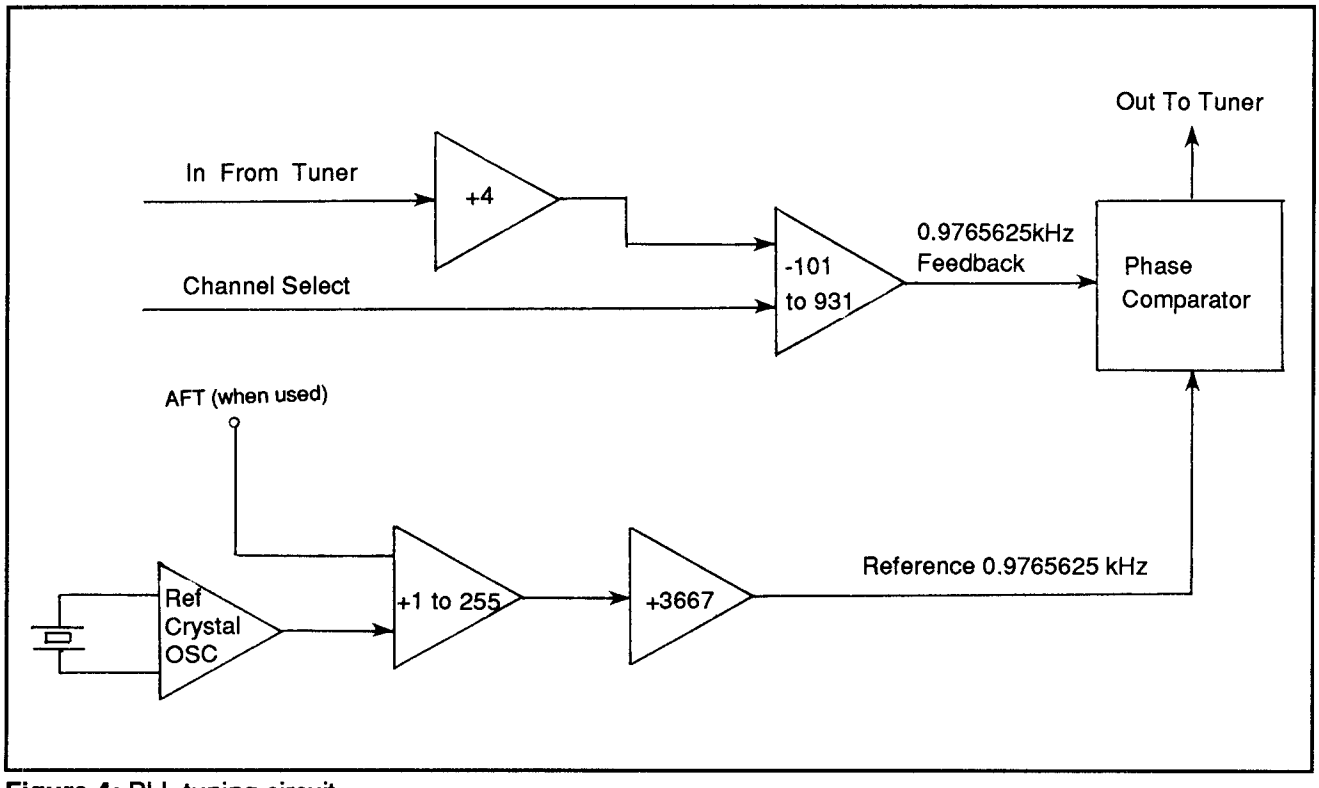

Figure 4: PLL tuning circuit

signal frequency. If there is a difference, the PLL system sends error signals back to adjust the output signal to the desired level. A PLL tuning section is shown in Figure 4.

Tuner Diagnosis and Repair

Any signal to be processed by a video receiver must pass through the tuner. The tuner can be the cause of many problems in picture display and audio performance. Tuner malfunctions include:

- Loss of all channels, or low or high channels
- Intermittent reception of one or more channels
- Weak or poorly defined picture
- Loss of color or poor color
- RF amplifier or mixer stage oscillation

All Channels with Problems

If there is a visible raster and the power supply is functioning properly, but there is a lack of picture, color, and sound, it indicates that information is not being

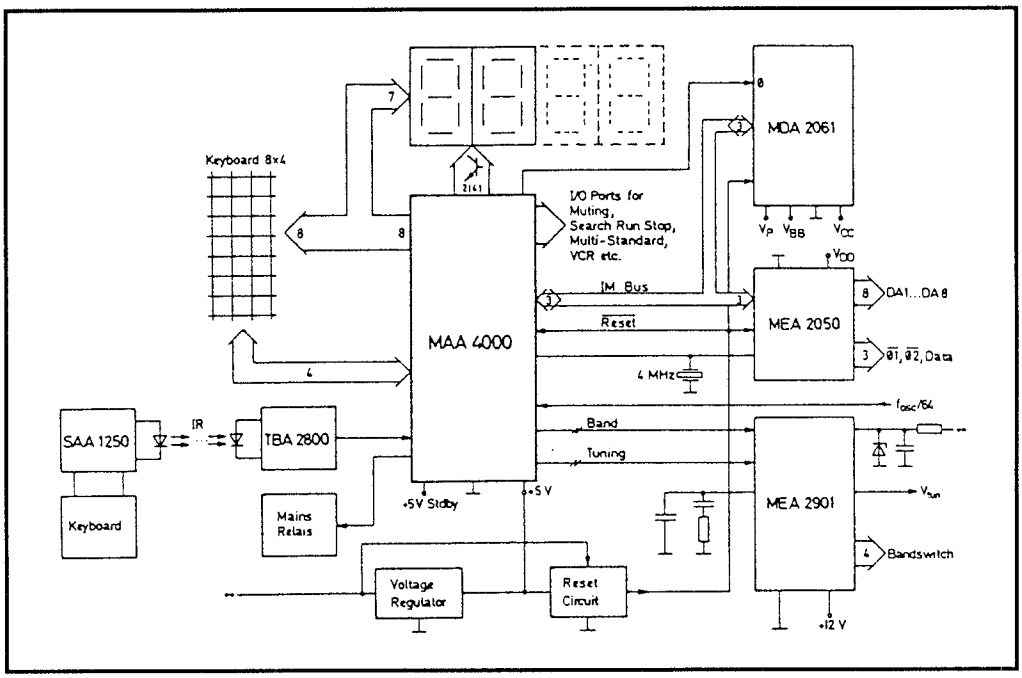

Figure 5: IC tuner circuit

processed between the antenna input and the video detector output. The video amplifier stages can be eliminated from testing because sound and color outputs will be generated even when the video amplifiers malfunction.

The quickest method to determine if the problem lies in the tuner is to use a tuner snubber. This is a portable, battery-powered tuner that is used to temporarily replace the tuner in the set. If using an electronic tuner, swapping the tuner circuit is the easiest method for determining tuner trouble. If the trouble goes away by either method of substitution, the problem is in the tuner.

Mechanical tuners are subject to wear. Damaged or broken mechanical contacts can cause a complete loss of picture and sound. A mechanical tuner should be carefully inspected for damage to the contacts. In this case it is best to replace the entire tuner. Also, lead lengths in the VHF circuitry are nearly as critical as exact component replacement. If a VHF mechanical tuner is replaced, all connecting leads must be of the same length.

Electrical problems in tuner processing stages can cause a complete loss of picture and sound due to the RF amplifier, mixer, local oscillator or the AFT processing stage.

If the RF amplifier is bad, no signal will be passed to the mixer. A defective mixer will prevent the RF signal from being heterodyned, even when the RF amplifier and oscillator are working properly. An oscillator may fail either by a defective oscillator or because the AFT processing stage has failed.

Low or High Channels with Problems

If a tuner is experiencing problems on either low or high channels only, the problem could be: a defective local oscillator transistor or IC, the local oscillator frequency is incorrect, defective mechanical tuner contacts, neutralizing capacitor misadjustment, defective coils or capacitors, or open or shorted capacitors in the antenna system. When a neutralizing capacitor is misadjusted, it could prevent some or many different channels from operating.

Weak or Poorly Defined Picture

A weak picture with possible noise interference and possible sound problems could be caused by a weak input signal at the receiver input, or inadequate amplification. The causes may be weak or defective transistors or ICs, dirty mechanical tuner contacts, wrong local oscillator voltage injection, value changes of components causing misalignment, or excessive AGC voltage levels. Dirty contacts are usually taken care of by simply cleaning them with a tuner contact cleaner.

In some tuners a test point known as a looker point may be available to aid in troubleshooting. Attaching an oscilloscope to view the tuner frequency response curve is possible at such a test point. Using a high-gain scope with a demodulator probe allows one to trace signals after the mixer stage. Also the test point may be used to decide whether certain frequency levels are able to pass through the RF amplifier.

Intermittent Reception

If one or a few channels are having trouble, the problem may be caused by mechanical tuner contacts. Dirty or damaged contacts will be the main problem. If any are damaged, the best fix is to replace the tuner.

If all channels are exhibiting the same symptoms, the problem lies in the DC operating conditions related to the tuner stages. The first step would be to check the local oscillator. If good, the next step is to check the RF amplifier and mixer stages. Proper waveforms and voltages are referenced within the manufacturer's schematics.

RF Amplifier of Mixer Stage

Problems that occur when an RF amplifier or mixer stage begins to oscillate include motorboating, herringbone pattern interference in the picture display, erratic reception when the fine-tune control is adjusted, and complete loss of picture and sound. These circuits can be made to oscillate by a tuner misalignment, an open bypass capacitor, an open AGC isolating resistor, any faulty

connections, or misadjusted or a defective RF amplifier neutralizing capacitor.

Poor Color or Lack of Color

Improperly adjusted fine-tuning will cause color to be lost or look poor. If this is so, the color control should be set to provide maximum color level. Then the fine-tuning should be adjusted to produce normal color reproduction. If the unit has an AFT circuit, turn it off to see if the color problem is repaired. You may also need to manually tune the channel. If the problem goes away, the AFT circuit is bad.

If problems like ghosting, or smearing occur due to the fine-tuning, use a sweep generator to check and align the tuner and the IF stages.

6/TTV - TR
Troubleshooting and Repair

6/TTV - TR - VS
Video Signals

The Composite Video Signal

Within a composite video signal for a color television are two parts: the luminance signal and the chrominance signal. The luminance signal creates the black-and-white image and the chrominance signal produces the color for that image.

Luminance Signal

The luminance, or Y signal, generates a complete black-and-white image on a receiver. In a color system the Y is used for creating the brightness and detail information. The luminance extends 1.25 MHz below the picture carrier frequency to about 4.3 MHz above it. The finer picture details are found in the upper sideband.

Chrominance Signal

The chrominance signal produces the color in the image. It is not visible without the luminance signal. This chrominance signal modulates the 3.58 MHz color subcarrier. Actually, the color subcarrier is assigned a frequency of 3.579545 MHz, but is often referred to as 3.58 MHz. Color information sidebands occupy a bandwith that extends from about 2.08 MHz to 4.18 MHz.

Chromaticity

To understand what the human eye can and cannot see as far as color goes, one needs to look at a standard chromaticity diagram. Figure 1 shows this chart. The chart was created in 1931 by the *Commission Internationale de l' Eclairage* (CIE) in France. It depicts colors in terms of hue and saturation.

Saturation is measured from just below the white-dot area which is just below the CIE illuminant. Saturation radiates outward in all directions along the X and Y axes. The numbers in the chart are specified in nanometers of the various visible colors. The three primary colors of light, red, blue, and green are on the chart, with red at the right, blue the bottom left and green at top. Other intermediate hues are listed throughout the spectrum.

Color used for television does not generate the entire spectrum as shown here, but rather a subsection, illustrated by the triangular section overlaid in Figure 2.

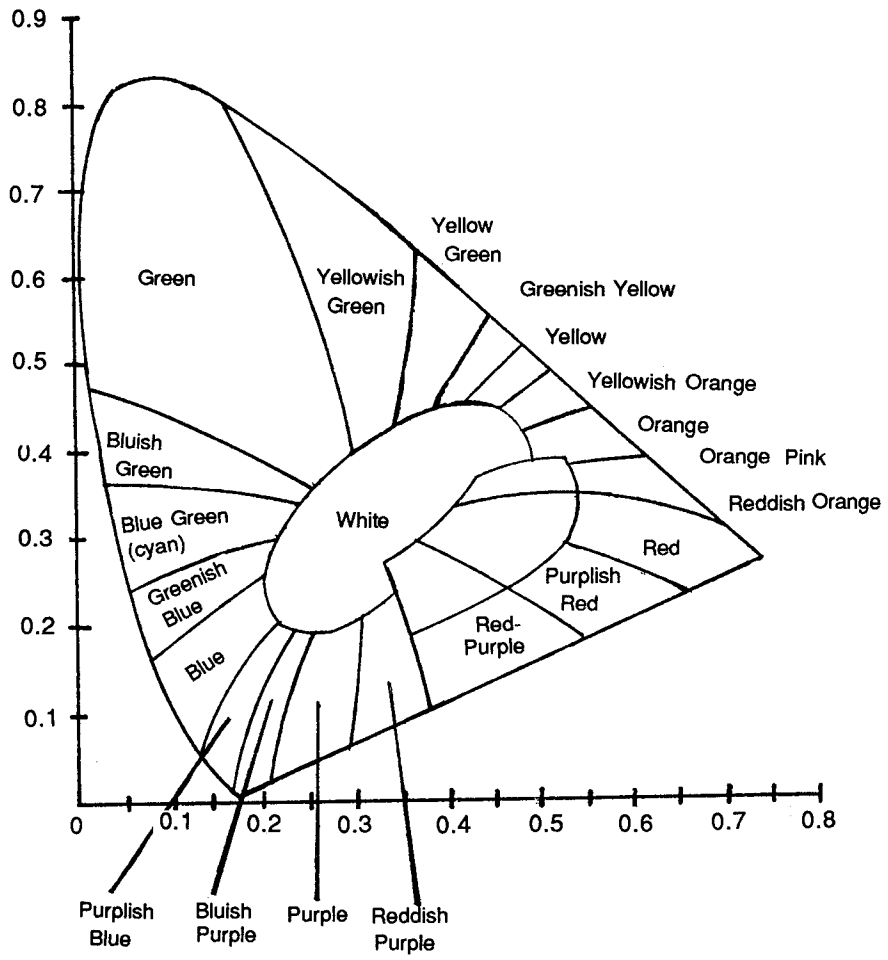

Figure 1: Chromaticity diagram

The Federal Communications Commission has specified the values of red at 0.67X and 0.33Y, blue at 0.14X and 0.08Y and green at 0.21X and 0.71Y.

A color TV can reproduce any color that occurs in nature, but certain hues like purple and green cannot be generated at full saturation. In nature, hues rarely occur at maximum saturation, so this limitation is not a major problem.

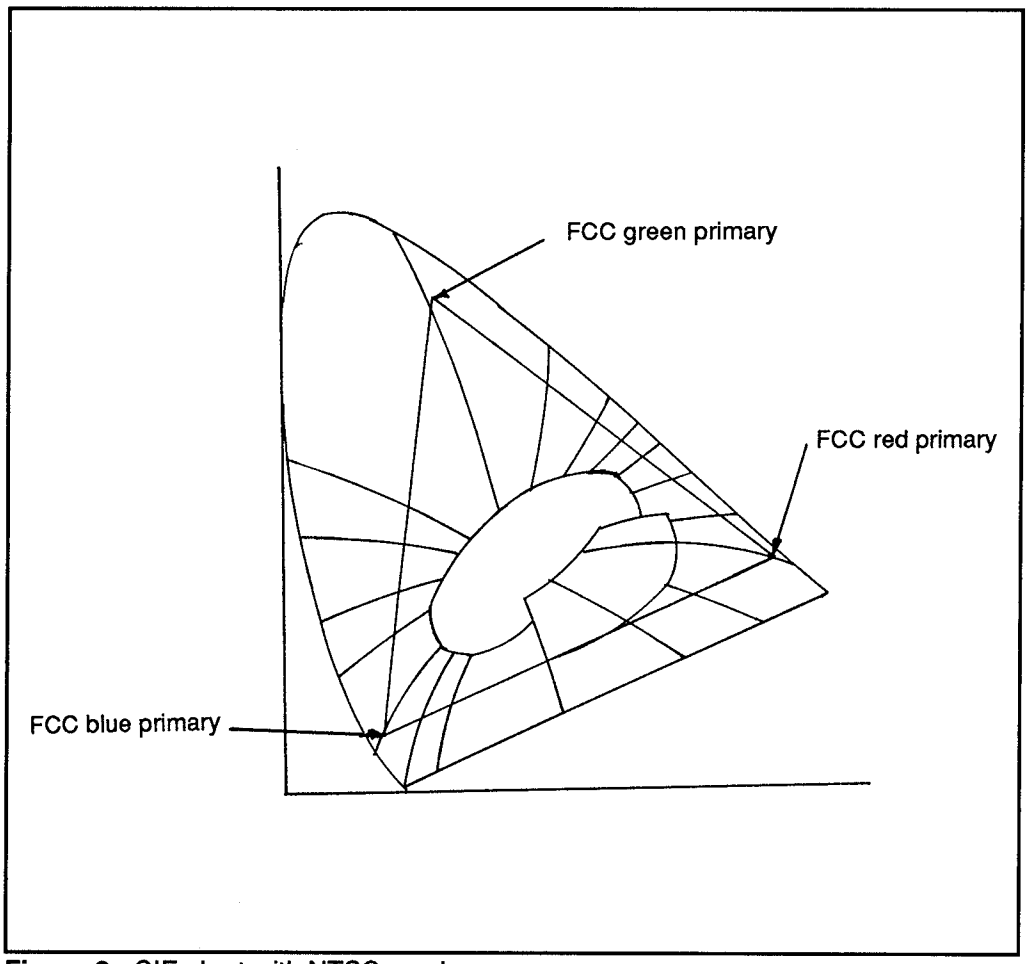

Figure 2: CIE chart with NTSC overlay

Modulation

Within an analog transmitted signal is information that is modulated. The percentage of modulation can vary, and in general it is desirable to have a high percentage of modulation in a transmitted signal. Modulated signals are never modulated at 100 percent because it is possible that overmodulation will occur and distort the signal. Overmodulation causes momentary carrier cutoffs.

Picture Phase

Video signals are transmitted in a negative picture phase to achieve the maximum transmitter efficiency. The brightest portion of a picture will have the least amplitude and the darker portions will have a higher amplitude. The blackest section which occurs at a region higher than 75 % means the electron beam of the tube is cut completely off by the bias voltage on the control grid. The brightest part of the picture occurs at 12.5 % relative amplitude.

By inverting the picture phase, the amount of distortion and interference is reduced. Some of this interference occurs from atmospheric disturbances and harmonics from other broadcast signals. These two interferences cause the amplitude of a broadcast signal to increase. So a picture in positive phase has signals that create pictures brighter than desired. By inverting the signal, any increase in amplitude creates a darker picture. Darker picture areas are less noticeable than lighter areas.

When the signal is received by a receiver, the signal is reinverted to a positive phase. In a positive phase system, the brighter information is more positive then the darker images, so the negative bias of the control grid is reduced to allow electron flow and the electron beam excites the picture tube phosphors.

Black and White

To create a black-and-white, or monochromatic picture with proper contrast, the red, green and blue (RGB) signals must be combined in certain percentages. To create an acceptable monochrome signal, the signal consists of 30% red, 59% green, and 11% blue. The varying degrees of the Y signal produce varying degrees of light and dark areas which make the complete monochrome picture.

Color Picture Signal

Color is transmitted as phase differences within a color signal. The more color required, the larger the difference between phases. Increasing the phase differences increases the bandwidth of the color signal, which in turn, increases the size of the composite signal.

The human eye is capable of distinguishing brightness differences but not color differences in very small areas. Therefore, in larger areas there are more combinations of RGB producing color than in smaller areas. Smaller areas may only need two of the three primary colors and edges between color areas will only require brightness differences.

By transmitting only the color information needed for the large and medium areas, the bandwidth for the signal can be cut down. This reduction in information assures that the color signal will fit in the space allocated for color.

The color subcarrier, a subpart of the color signal, must be modulated so that the complete color information is transmitted. Transmitting information for each of the three primaries would extend beyond the bandwidth of 6 MHz, so two methods of modulation are employed.

Two 3.58 MHz color subcarriers are generated, 90° out of phase with each other. The two AM color subcarriers and their resultant sidebands are then able to be

combined. The resultant, or phasors, of the signals are proportional to the strength of each of the signals. Different phasors (resultants) will be created by the combinations of signals at different strengths.

The hues of color are determined by the phase angle of the resultant. Color saturation is determined by the length or amplitude of the resultant. Any phase shift will create incorrect colors.

The color signal is located at 3.58 MHz with the color information sidebands below and above. The amount of color information to produce a satisfactory color image can be found in sideband frequencies of 0 to 1.5 MHz. Resultants of different angles are needed to create single colors.

Chrominance Section

A block diagram of a chrominance section is shown in Figure 3. The chrominance section separates the I and Q signals and demodulates them to produce the original RGB information. These signals are then sent to a matrixing network.

In the matrixing network, the RGB signal is proportioned to create a proper color picture. Output from the matrixing circuit is fed to the red, green and blue electron guns in the color picture tube. The chrominance section is switched off when black-and-white video signals are received due to the lack of the color burst signal.

The operation of the chrominance section is controlled by the color killer stage. The color killer stage detects the color-burst signal and turns the color killer stage off, allowing color information to pass freely.

To control the color killer stage and the color subcarrier stage, a phase detector is used. A phase-detector circuit creates a DC control voltage in response to signals of a given phase difference.

The burst gate is an amplifier that increases the level of the color burst. To eliminate problems with black-and-white pictures, the burst gate is limited to 0.5 MHz and is only on during the color burst signal at the time of the horizontal retrace.

Color Synchronization Sections

The color sync section creates a stable 3.58 MHz signal that is used as a reference to lock the phase. This signal is mixed with the color signal sidebands in the chrominance section to recreate a complete color signal.

The synchronization pulse separator removes the sync pulses from the detected

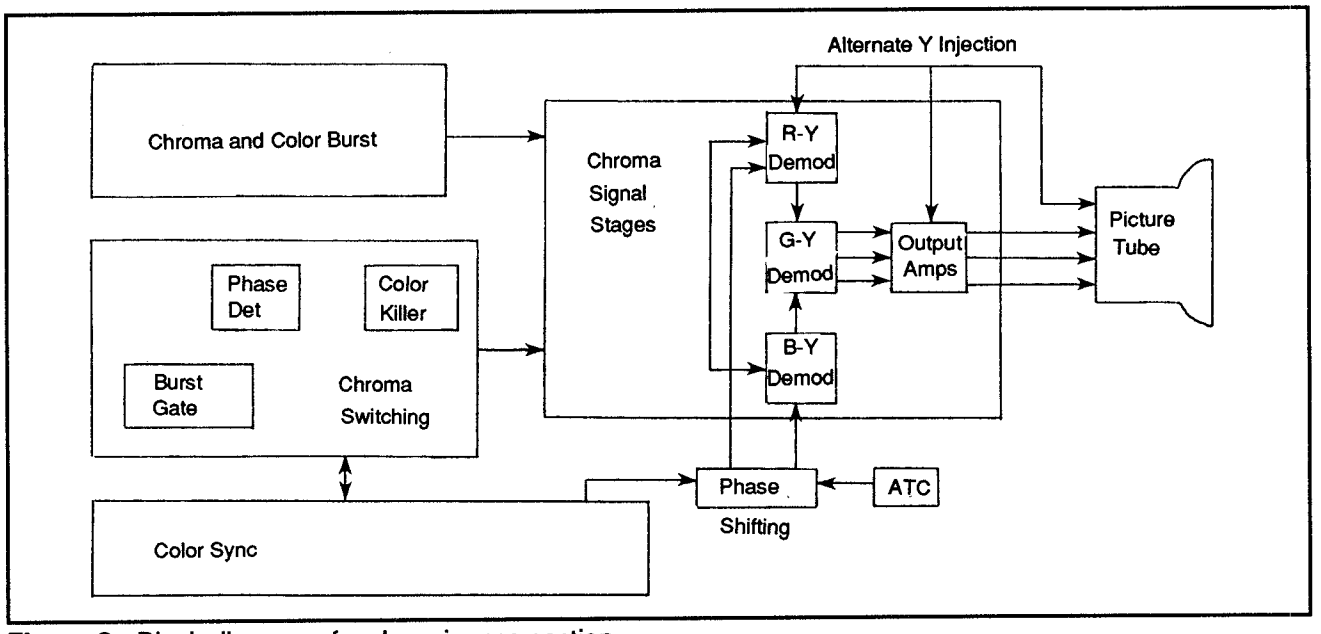

Figure 3: Block diagram of a chrominance section

signal and amplifies them. These pulses are then sent to the vertical and horizontal deflection circuits through integrating and differentiating networks. The integration network uses low-pass filters to create signal voltages of longer duration. Differentiation is the use of high-pass filters to create signal voltage of shorter duration.

I and Q Signals

Along with the color subcarrier are two signals designed to reduce the phase shifts and the bandwidths required for transmission of color signals. These are the I (in phase) and Q (quadrature) signals.

The I and Q signals are positioned at a 90° phase difference. Resultants of the I and Q signals aid in reproduction of a full range of colors needed for large areas, with as much as 0.5 MHz resultants being used. In medium areas the I signal is only needed to produce colors that appeal to the viewer. A +I signal can be found between the yellow and red hues and the -I signal between the blue and cyan hues. The I and Q signals modulate the 3.58 MHz subcarrier to transmit color information.

6/TTV - VCS
Various Case Studies

6/TTV - VCS - Mag T985/T986
Magnavox Chassis
T985-05/-06/-07/-08, T986-06

The following is a case study for the above listed Magnavox chassis televisions. The set consists of various integrated circuits and discrete electronic components. The tuners are mechanical tuners. From a repair standpoint, this is a low-end set, but with a solid understanding of such sets, the more complicated, fully integrated sets can be better appreciated.

Disassembly Instructions

The disassembly described here will be needed for servicing the TV. In some cases, only the chassis cabinet will need to be removed. In extreme cases (picture tube replacement) the entire disassembly will need to be done. Basic disassembly starts with the cabinet removal.

Disconnect antenna leads and remove the seven screws holding the cabinet back to the set. This is best accomplished with the set picture tube down.

To access the picture tube and various elements around the tube you will need to disconnect the CRT socket, HV anode lead, deflection yoke plug, degaussing coil plug, speaker leads, and the various ground wires.

Warning! *Be sure the picture tube has been discharged before disconnecting.*

Remove the four screws holding the chassis. Remove the chassis from the swing pin and lift the chassis from the cabinet. The CRT can be removed at this point.

To remove the CRT, remove the four screws holding the degaussing shield and lift the shield from the cabinet. Remove the two screws holding the CRT retaining wires and remove the wires. Lift the CRT from the cabinet.

Tip ☞ Do NOT remove the CRT by lifting it by the neck. The tube is likely to rupture. The resulting implosion can cause severe injury. When the CRT has been removed, store it face down on a soft, protective surface.

Remove all the knobs from the front of the cabinet. Remove the four screws holding the tuner and control assembly and lift the assembly from the cabinet.

Troubleshooting

The T985/986 chassis is always at a level above ground potential, regardless of the line polarity. An isolation transformer should always be used when operating the set with the back cover removed.

Parts used for replacement should be matched exactly or as closely as possible. Many of the parts recommended in the service literature are designed with special safety-related characteristics that may not be evident from visual inspection. Using components rated at a higher voltage, wattage, etc. will not always serve well as replacement parts. Use of parts not recommended by the service literature may cause shock, fire or other hazards.

Troubleshooting Checklist

When troubleshooting the Magnavox line of TVs (in this particular model) the following checklist may be of use.

PICTURE OR SOUND	AREA TO CHECK
No picture, sound and raster	Circuit breaker or fuse Load sensor or line sensor 24 V regulator Bias regulator - D1, D2, or Z1 Power supply module - BR1, SR1, Z1 120 V regulator module
No picture and sound, but has raster	Tuner 1st, 2nd, or 3rd IF AGC gate Noise gate AGC-sync modules
No Picture and raster, but has sound	Delay line driver Video driver Vertical blanker Beam limiter CRT Video delay module
No picture and sound, but has snow	Tuner AGC gate Noise gate IF/AGC-sync modules

Troubleshooting Checklist (cont'd)

PICTURE OR SOUND	AREA TO CHECK
No sound, but has picture	Video output - D2 IF module Delay line driver Video driver Video delay module
Overload Picture	AGC gate Noise gate - D1, D2, D3, D4, D6, D7 AGC-sync module - D2 IF module
Low or excess brightness	Delay line drive Video delay module Beam limiter Video driver Vertical blanker

SWEEP PROBLEMS	AREA TO CHECK
No raster, but has sound	HV tripler CRT
No raster and sound	Horizontal oscillator, driver or output - D101 Horizontal oscillator/driver module
No vertical deflection	Vertical oscillator, switch, diff. amps, driver Vertical output - D1, D2, D3, D4 Vertical oscillator/driver module
Poor vertical line or foldover	Differential amps, driver Diff. Outputs - D1, D2, D3, D4 Vertical oscillator/driver module
Poor horizontal line or foldover	Horizontal driver, output Horizontal oscillator/driver module
Narrow picture	Horizontal driver, output - D101 Horizontal oscillator/driver module
Vertical off frequency	Vertical oscillator/switch Vertical oscillator/driver module
Horizontal off frequency	Horizontal oscillator Horizontal oscillator/driver module

SYNC PROBLEMS	AREA TO CHECK
No vertical sync	Vertical oscillator Vertical oscillator/driver module

Troubleshooting Checklist (cont'd)

SYNC PROBLEMS	AREA TO CHECK
No horizontal sync	Horizontal oscillator Horizontal oscillator/driver module
Neither horizontal or vertical sync	Sync separator Noise gate - D5 AGC sync module

RASTER PROBLEMS	AREA TO CHECK
Yellow (No blue)	Chroma demodulator Blue video output CRT Chroma demodulator/RGB modules
Cyan (No red)	Chroma demodulator Red video output CRT Chroma demodulator/RGB modules
Magenta (No green)	Chroma demodulator Red video output CRT Chroma demodulator/RGB modules
No color	Chroma amp/oscillator Gate amp Chroma demodulator 3.58 MHz amp Chroma processor Chroma demodulator modules
Weak color	Chroma amp/oscillator Gate amp Chroma demodulator Chroma processor Chroma demodulator modules
No color sync	Chroma amp/oscillator Gate amp Chroma demodulator 3.58 MHz amp Chroma processor Chroma demodulator modules

RASTER PROBLEMS	AREA TO CHECK
No green	Chroma amp/oscillator Green video output Chroma demodulator/RGB modules

Troubleshooting Checklist (cont'd)

RASTER PROBLEMS	AREA TO CHECK
No Blue	Chroma amp/oscillator Green video output Chroma demodulator/RGB modules
No red	Chroma amp/oscillator Green video output Chroma demodulator/RGB modules
Incorrect hue (tint)	Chroma amp/oscillator Chroma demodulator 3.58 MHz amp Chroma processor/chroma demodulator/ RGB modules

TV Alignment

Turn the set on and let it warm up for at least 20 minutes. The test equipment should be allowed to do the same. Set the channel selector to the highest unused channel. Use an isolation transformer, or at the very least be sure to observe polarity. The line voltage should be maintained at 120 VAC (nominal). Ground test the equipment against the TV chassis ground unless otherwise instructed.

Set the scope sweep to external and connect the scope vertical input to the scope vertical output on the sweep/marker generator. Connect the scope external horizontal input to the scope horizontal output on the sweep/marker generator. When using the sweep/marker generator, use only enough generator output to provide a usable indication.

Set the service switch to the service position and the AFT switch to the off position. Connect a +0.5 V bias to connection W48. W48 is located on the IF module and is pin number 9. Figure 1 shows a cross section of this circuit. The normal range of the IF AGC connection (W48) is between -.98 V and 4.33 V. It should not vary outside this range. This connection will allow you to do a video IF alignment, 4.5 MHz Trap Alignment, Sound IF alignment, and the AFT alignment.

Video IF Alignment

For the video IF alignment, connect the direct probe from the sweep/marker generator to TP 2. The test point on the VHF tuner should be connected to the sweep generator output and set to 44 MHz, or a 10 MHz sweep. TP 2 can be found as lead 59 coming from pin 2 of the chroma processor.

Refer to Figure 2 to see how the waveform will appear.

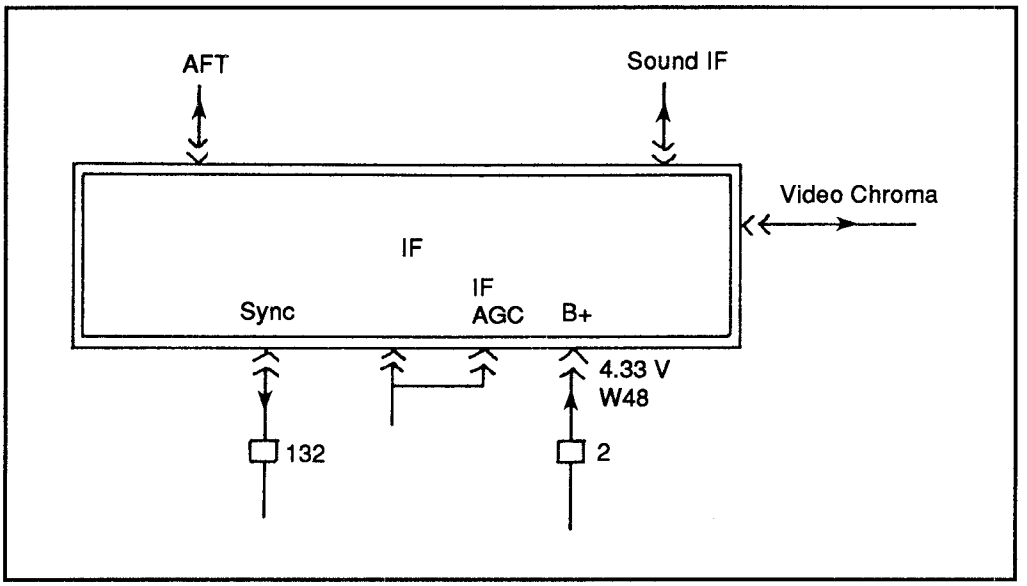

Figure 1: Location of W48 in cross section view of IF module circuit

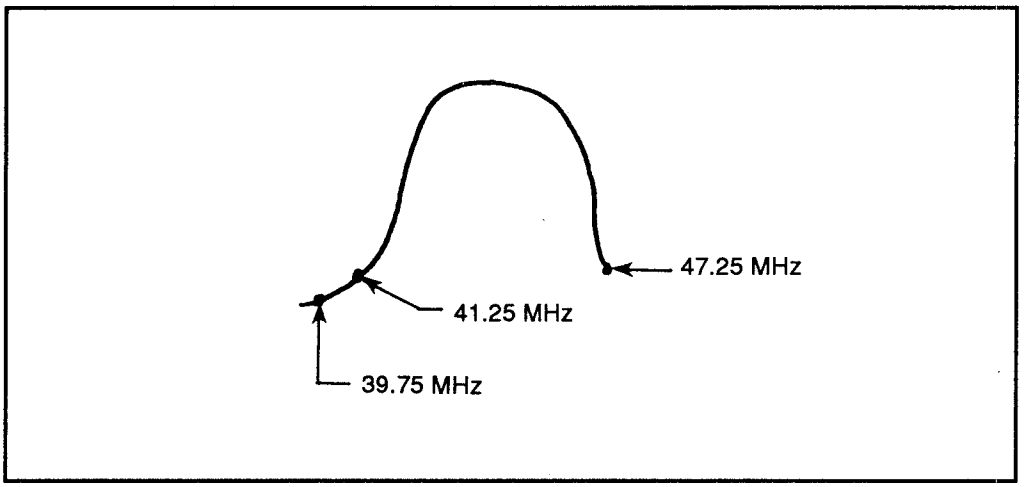

Figure 2: Waveform adjustments for 39.75, 41.25 and 47.25 MHz

Adjust L15 (IF module board) for a minimum response. The marker generator frequency will be 39.75 MHz.

Adjust L4 and L8 for minimum settings. The marker generator frequency will be 41.25 MHz.

Adjust L2 for a minimum setting. The marker frequency will be 47.25 MHz.

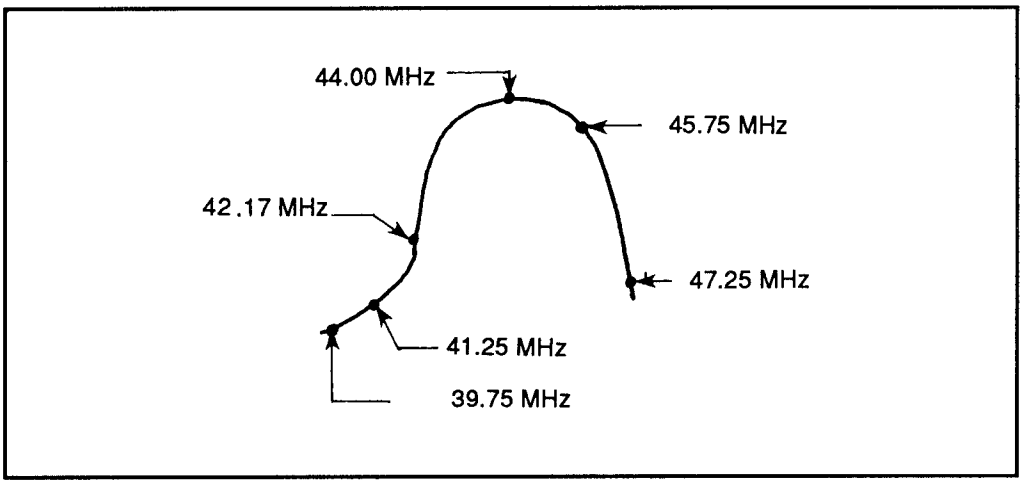

Figure 3: Waveform for adjustments from 39.75 MHz to 47.25 MHz

The next group of adjustments will fine-tune the various adjustments above. Refer to Figure 3 for the waveform.

Adjust L3, L5, L6, L7, L9 and the VHF IF output coil for the maximum gain possible. Also adjust for the best symmetry of response possible.

Adjusting L6 and L7 will affect the 44.00 MHz marker generator frequency. L5 will affect the 45.75 MHz response.

L3 and the VHF IF output coil affect the overall response.

4.5 MHz Trap Alignment

The TV will need to be tuned to a strong TV signal or connected to a pattern generator with RF output. The contrast should be set at the maximum. Adjust the fine tuning until a beat pattern is visible on the screen. Adjust T1 of the IF module for a minimum beat interference.

Sound IF Alignment

The TV must be tuned to a strong TV signal. Adjust L1 for the maximum sound possible. Reduce the signal strength at the antenna terminals until distortion appears.

L2 should be adjusted after distortion appears. This is to align for an undistorted output. Continue to reduce the signal while doing this adjustment. Figure 4 shows the circuit for the sound module.

Automatic Fine Tuning Adjustment

Connect the direct probe from the sweep/marker generator to W2. W2 can be found on the AFT module as wire 53 (gray) connected to pin 2 of the AFT

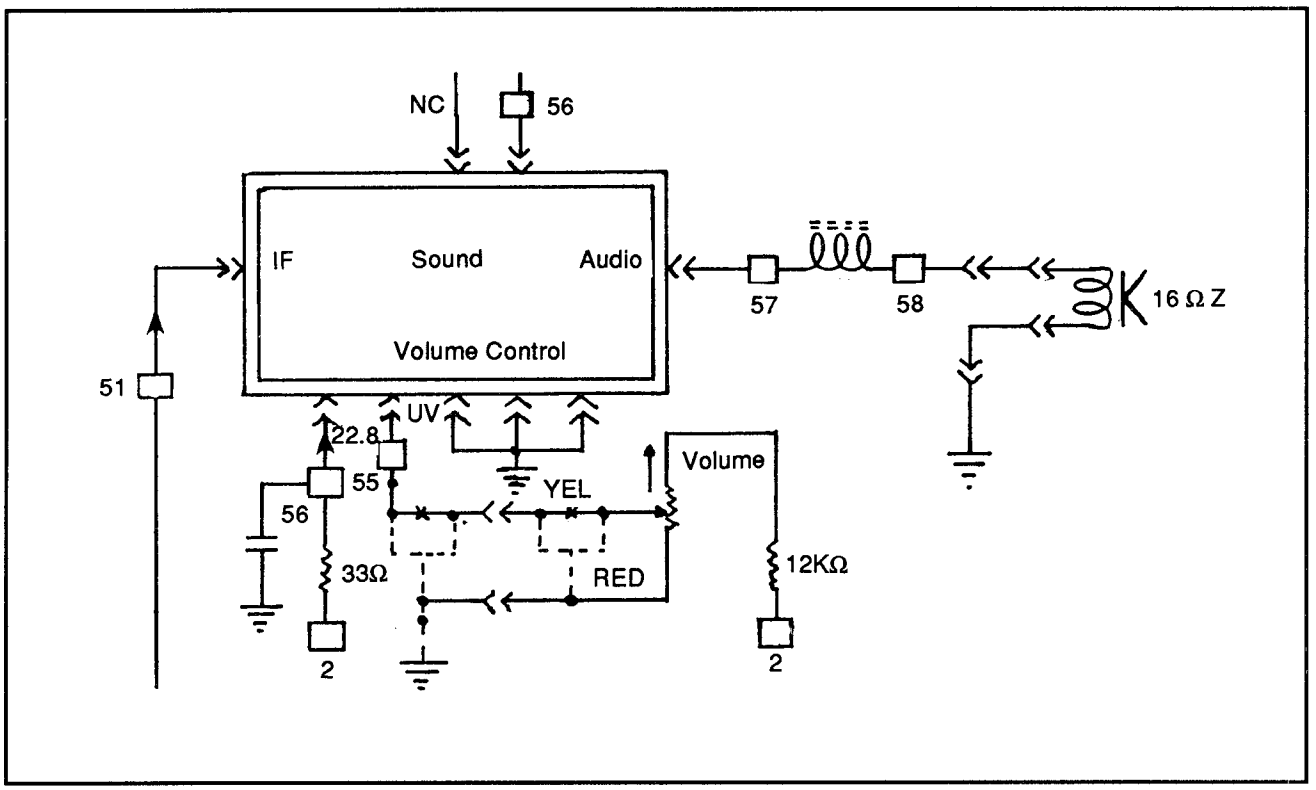

Figure 4: Sound module

module. Figure 5 shows the circuit for the AFT module. Connect the sweep generator to the TP on the VHF tuner. The sweep generator frequency will be 44 MHz (10 MHz sweep) and the marker generator frequency will be 45.75 MHz.

Adjust L3 on the AFT module for a maximum gain and symmetry of response. Adjust L2 on the AFT module for a crossover at 45.75 MHz. Refer to the waveform in Figure 6.

3.58 MHz Peaking Adjustment

To adjust the 3.58 MHz signal, tune in a good color signal either from a broadcast station or from the pattern/color bar generator. Connect the scope to TP5 on the chroma demodulator module and observe the 3.58 MHz signal. Figure 7 shows both the chroma demodulation module and the chroma processor module.

Adjust L1 on the chroma demodulator module to get the maximum amplitude of the 3.58 MHz signal. It should be about 1 V p-p (peak-to-peak).

Turn the videomatic switch to off and rotate the tint control (R303) to ensure that

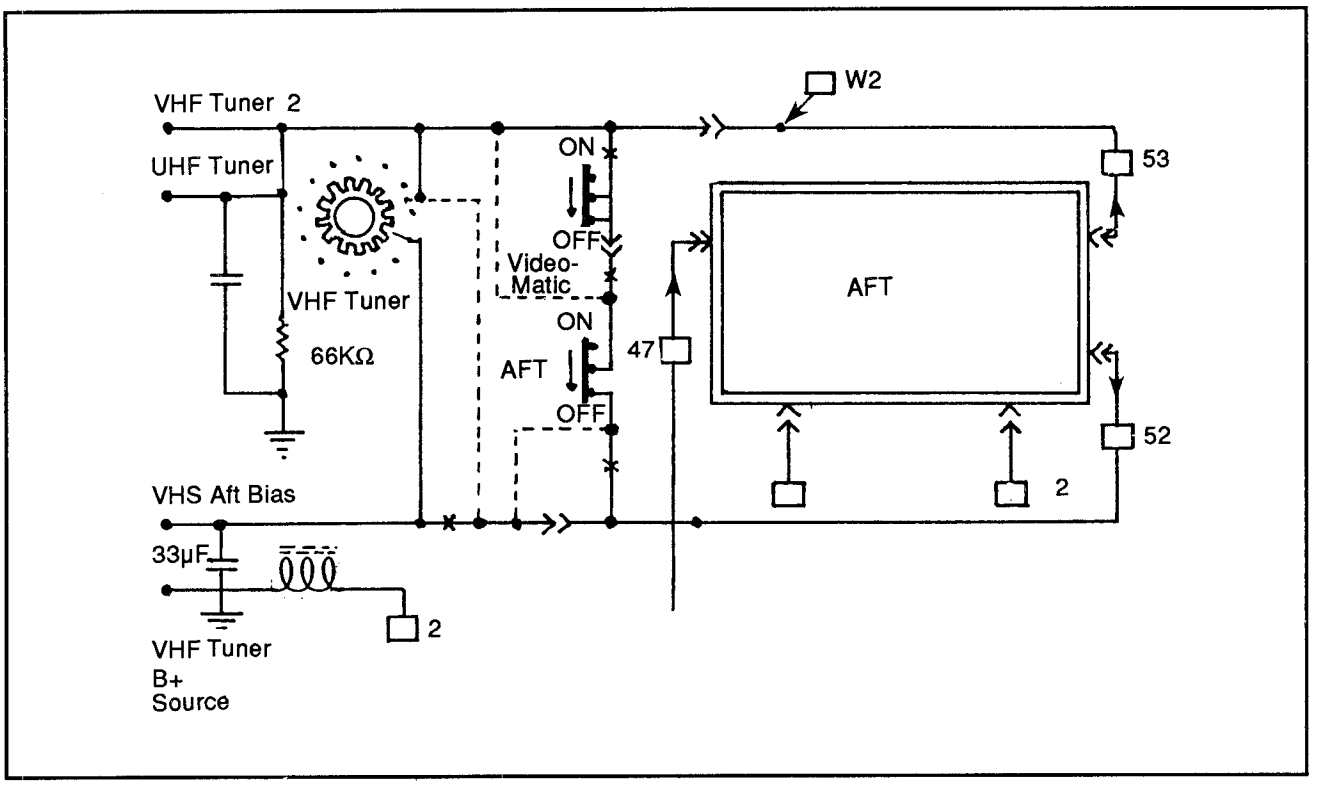

Figure 5: AFT circuit diagram

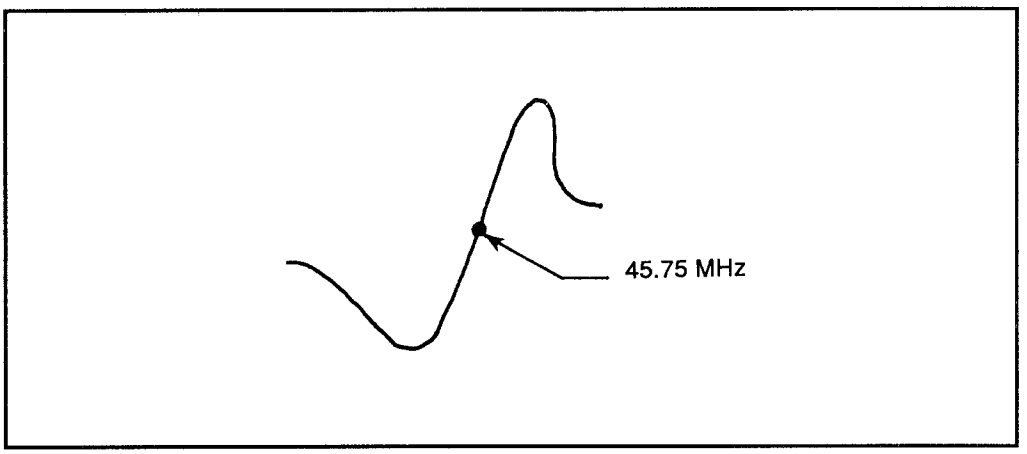

Figure 6: AFT waveform used for adjustments

the flesh tones can be shifted into green and into purple. L1 may need to be adjusted until a proper tint range is obtained.

3.58 MHz Chroma Oscillator Adjustment

As before, set the TV to receive a good color signal. Turn the videomatic switch off and turn the color control fully clockwise. Connect a jumper between TP3 on the chroma processor module and ground.

The color killer control may need to be adjusted until color is obtained. This is R7 of the chroma processor module. Refer to Figure 7 for the chroma processor and demodulator as previously shown.

Adjust C5 until the color stops on the screen or has zero beat. Remove the jumper and readjust the color killer control if necessary.

Color Killer Adjustment

Tune the TV to an unused channel. Turn the videomatic switch to the Off position. Turn the color control fully clockwise. The color killer control (R7) of the chroma processing module should be turned fully counterclockwise. Adjust the color killer control clockwise until color snow appears and then abruptly disappears. When this happens, the adjustment will be correct.

Purity

The VHF tuner should be set between channels. Turn the videomatic switch to off and the contrast control fully counterclockwise. Turn the red background fully clockwise and the green and blue background controls fully counterclockwise. Adjust the brightness control to get the best possible red raster. Loosen the purity magnets by turning the locking ring about 1/4 of a turn clockwise. These are located on the neck of the CRT and will be the two tabs closest to the end of the neck. The locking ring will be closest to the coil around the tube neck. Spread the purity magnets until a uniform red is seen over the entire screen.

Static Convergence

The pattern generator with a crosshatch generator pattern selected will need to be connected to the antenna terminals. Adjust the two convergence magnets, one and two (the next four tab rings behind the purity rings) to converge the blue and green vertical and horizontal lines. Adjust the next two convergence magnets (three and four) to converge the red vertical and horizontal lines. The magnets are numbered from the tube out toward the neck end.

Gray Scale Adjustment

Tune the TV to an unused channel. Turn the videomatic switch to the Off position. Turn the brightness, contrast and color controls fully counterclockwise. Make sure the normal/service switch is set to the service position. The master screen control should be adjusted clockwise until one of the three colors is just visible. Turn the background controls of the other two colors clockwise until they are also just visible.

Reset the normal/service switch to the normal position and tune in a picture from

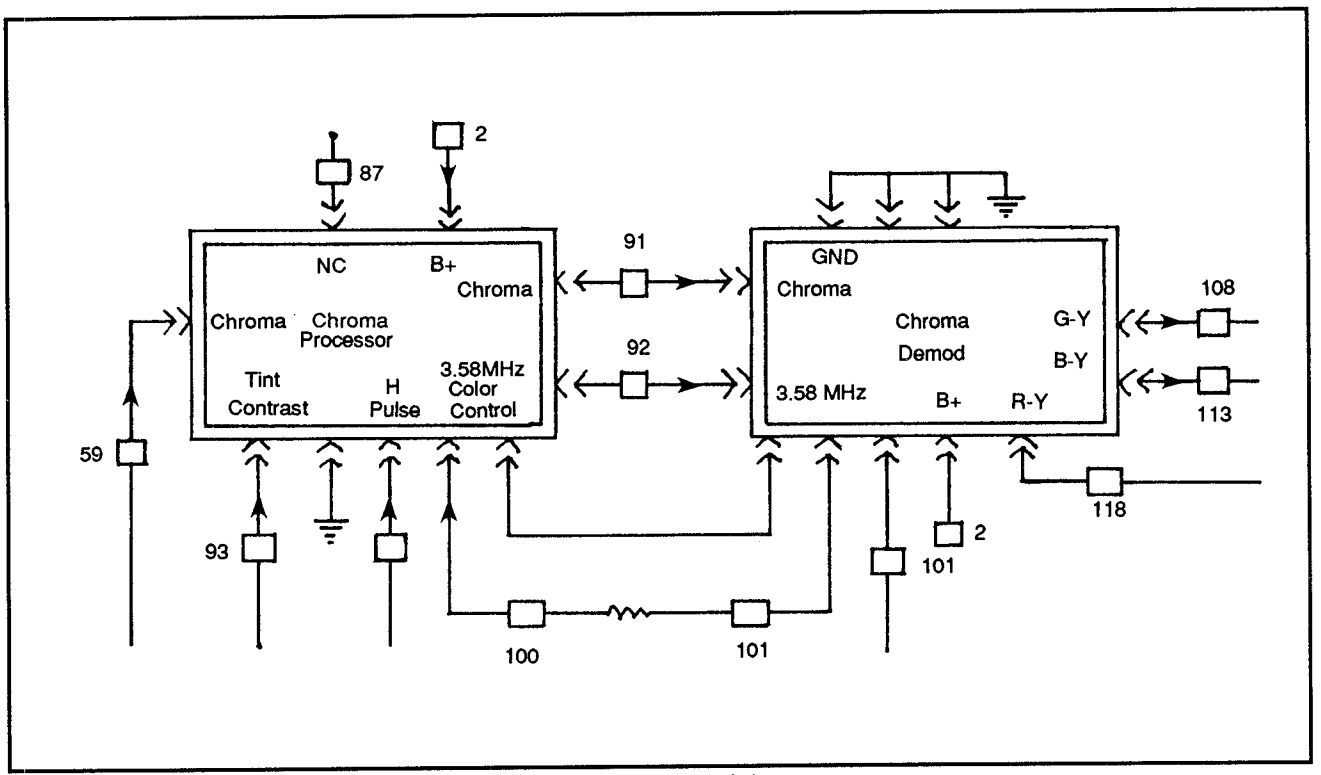

Figure 7: Chroma demodulation and chroma processor modules

a station or from the pattern color bar generator. Adjust the brightness and contrast to receive a dim black-and-white picture. If there is color shading visible in the low light sections of the picture, adjust the appropriate background control for a proper low light tracking setting.

Turn the brightness control up to a bright black-and-white picture level. If the highlights have color shading, adjust the appropriate drive controls to obtain a good highlight tracking control.

Videomatic Range Adjustment

When the videomatic switch is on, the videomatic module determines how much effect ambient room light will have on the picture. To adjust this control, make sure the videomatic range switch is set to the On position. Have a good picture tuned on the screen.

Adjust the videomatic range control R4 for the best possible picture. The videomatic section is shown in Figure 8. A good color signal should be present on the TV screen. Press the videomatic switch S302. Adjust the preset brightness, color and tint controls for the best possible picture.

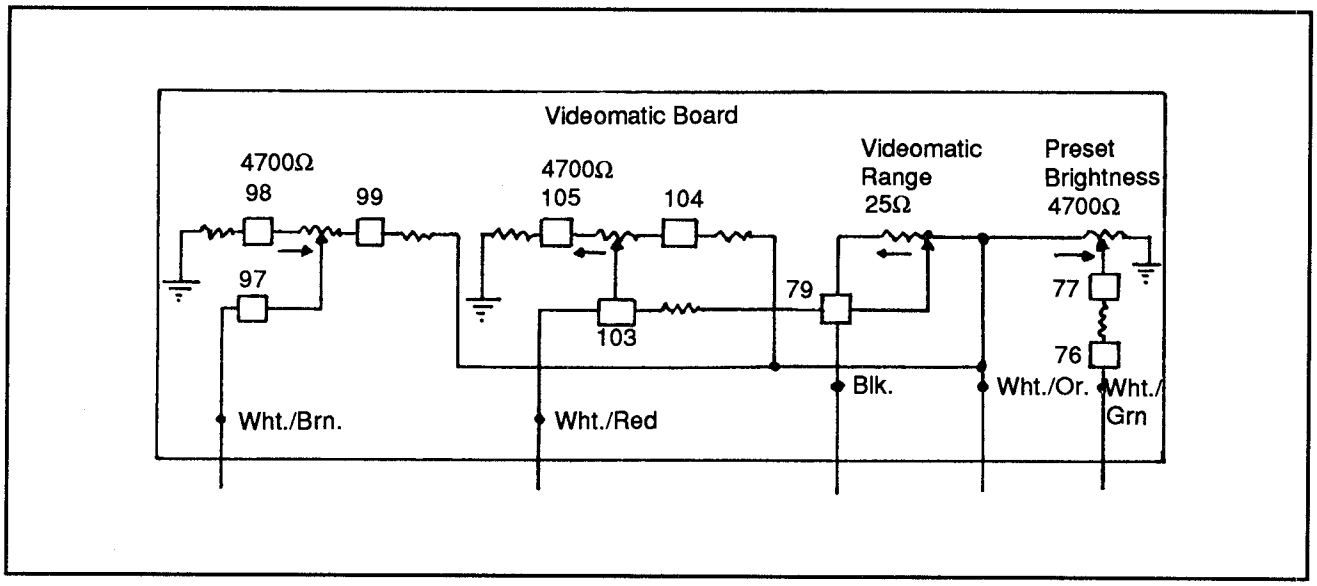

Figure 8: Videomatic module

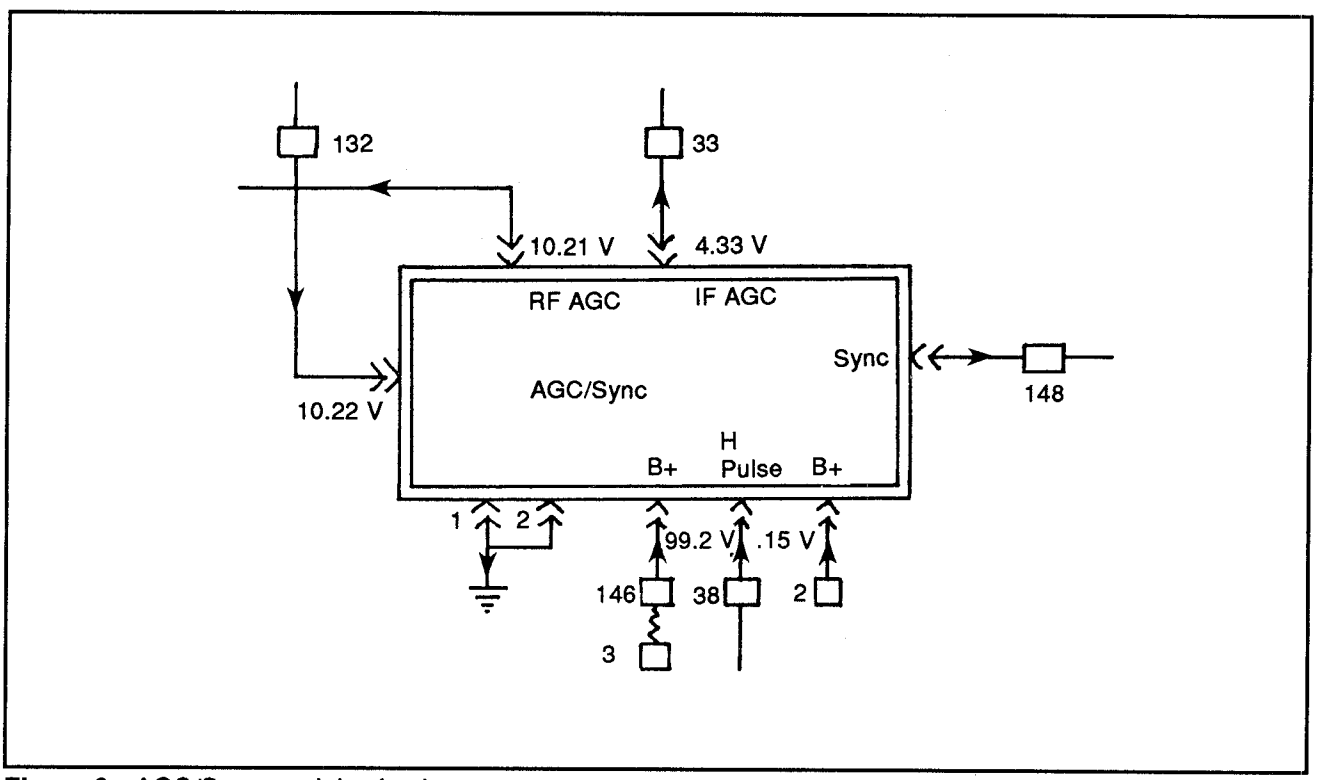

Figure 9: AGC/Sync module circuits

AGC Adjustment

Again, a good picture is required from a local TV station. Adjust the RF AGC delay control R7 on the AGC/Sync module fully clockwise. Then turn the RF AGC delay control counterclockwise until the minimum amount of snow is received. Figure 9 shows the AGC/Sync module.

B+ Adjustment

This test requires the use of a DMM connected to W7. W7 is located at the power supply line, pin 4. Adjust R4 to read +24 V. Figure 10 shows a section of the circuit for the power supply.

High Voltage Adjustment

A high voltage probe should be connected to the CRT anode. Set the videomatic switch to the Off position. Adjust R10 of the power supply module for 24 kV at a minimum brightness. Be careful with this adjustment, for you are dealing with some very high voltage.

Vertical and Horizontal Centering

Tune in a station or inject a pattern from the pattern generator. Adjust the vertical centering control R19 to center the raster vertically. R19 is located on the vertical module which is shown in Figure 11.

A horizontal centering plug can be found on the main PC board. Place the plug in the position that gives the best horizontal centering.

Horizontal Oscillator Adjutment

Tune in a station and set the normal/service switch to the middle position. Adjust the horizontal hold R9 to get a minimum horizontal drift. This adjustment is located on the horizontal module and is shown in Figure 12.

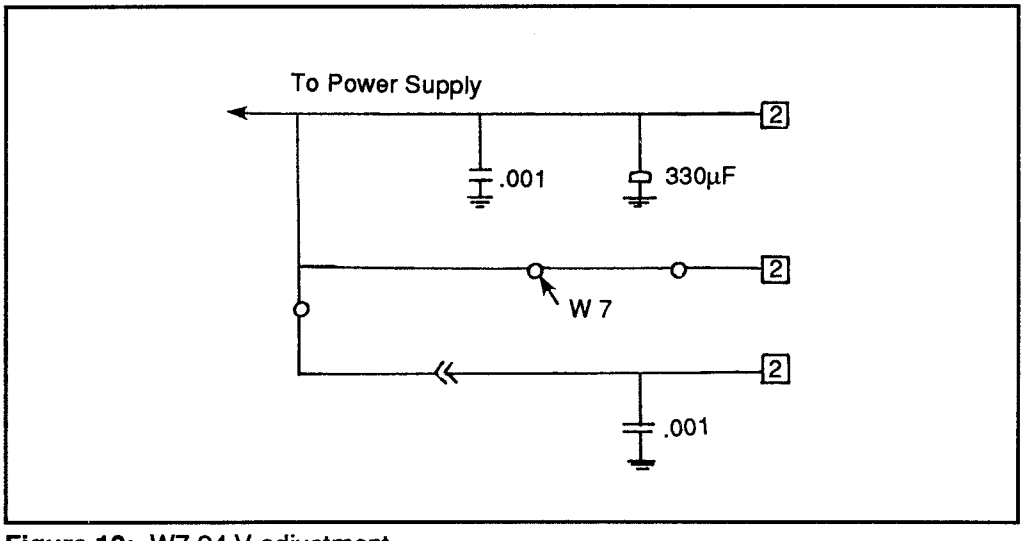

Figure 10: W7 24 V adjustment

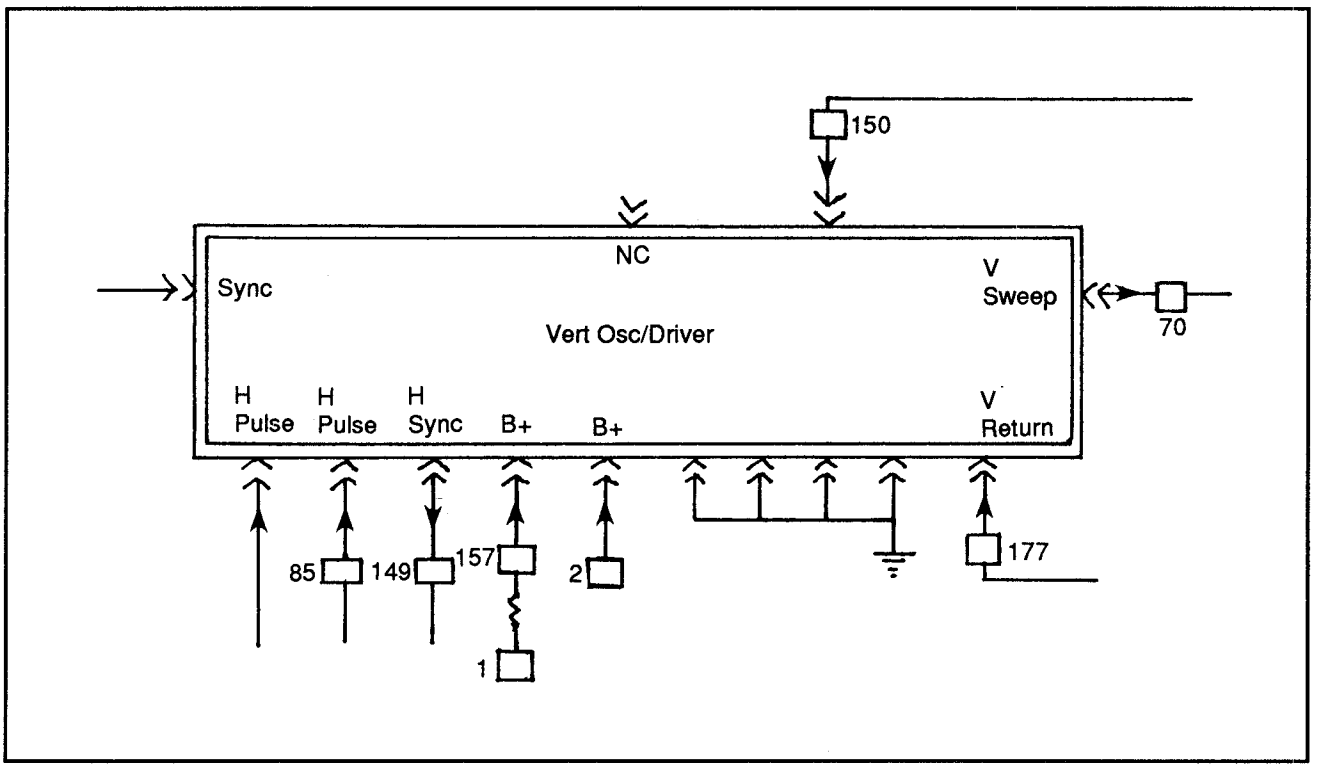

Figure 11: Vertical module circuit

Tuners

The VHF tuner controls all the tuner outputs for both the VHF and UHF tuners. Both tuners are connected to an automatic fine tuning (AFT) module which makes fine adjustments for the two tuners. If the VHF tuner is not working, it may inhibit the functioning of the UHF tuner. If the UHF tuner is not working, it could be because of a bad VHF tuner, or bad UHF section on the VHF tuner. If both tuners work fine with the AFT turned off, but the image degrades with this control on, there is probably an AFT circuit malfunction.

Tuner adjustments are factory-set. If there is a major problem with the tuners that a general cleaning cannot cure, or if the replacement of a broken wire or part doesn't solve the problem, the tuner should be replaced as a whole.

AFT Control Module

The automatic fine tuning (AFT) module is an IC-based controller with a few discrete components and three tuned coils. The module (when suspected as bad) should be swapped with another module for troubleshooting. If, however,

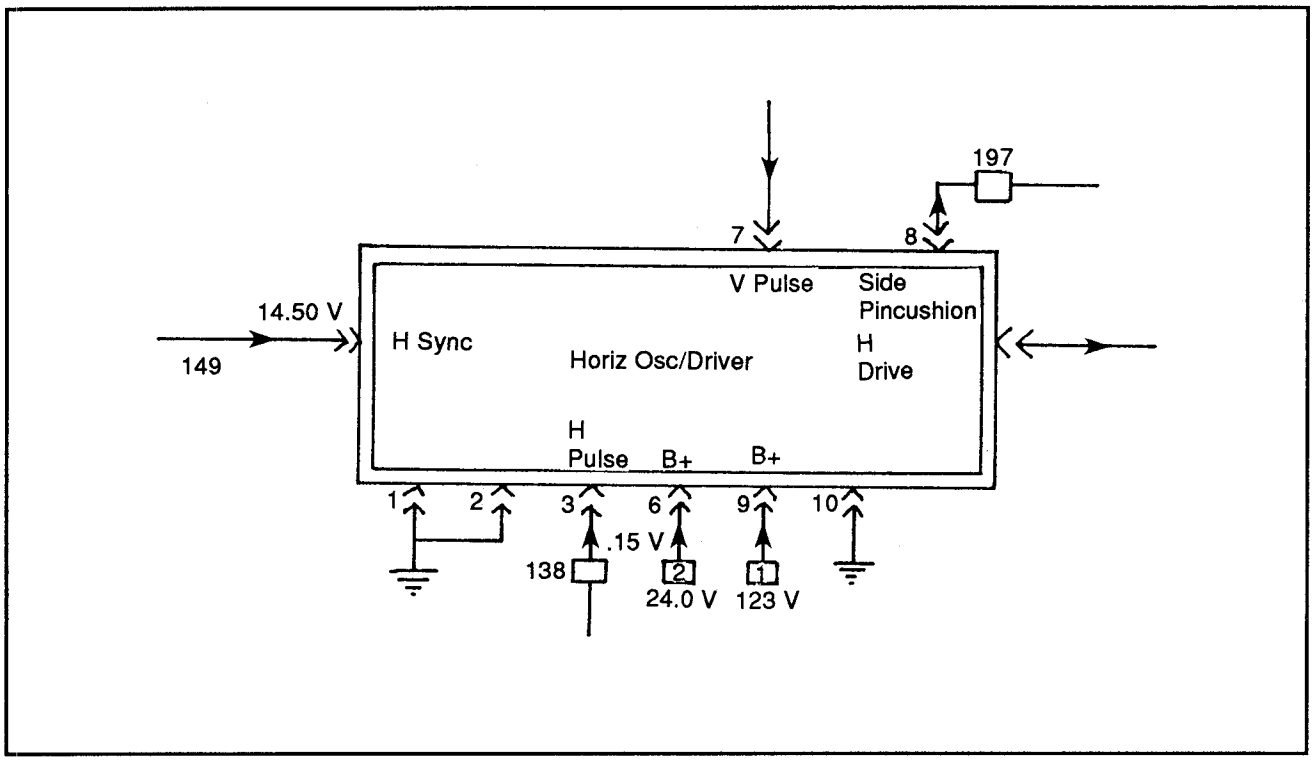

Figure 12: Horizontal module circuit

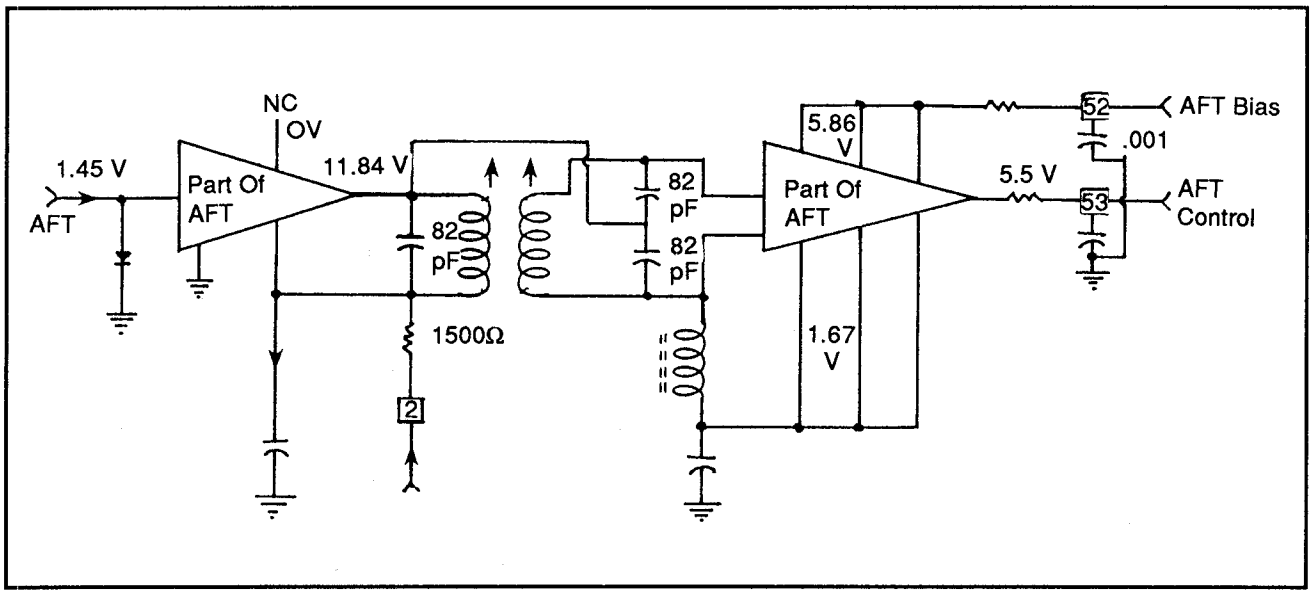

Figure 13: AFT circuit diagram

another module is not available, the following checks can be done. The IC may or may not be socketed for easy removal. If removed and not socketed, replace with a socket first before installing a new chip. (The IC is GE part GEIC-225 or Motorola equivalent HEPC6100P.)

If all the voltage levels check out for those to be found in Figure 13, the AFT circuit diagram, the module should be working. If not, replace the module.

Table of Contents

Section 7
Audio

Table of Contents

7/A *Amplifier*

7/A - A *An Introduction*
7/A - TR *Troubleshooting and Repair*
7/A - TR - P *Preamplifiers*
7/A - TR - SSA *Solid State Amplifiers*
7/A - TR - TA *Tube Amplifiers*

7/A - VCS *Various Case Studies*
7/A - VCS - KA *Keyboard Amplifier*

7/CD *CD Player*

7/CD - F *Features*
7/CD - F - CDPD *CD Player Design*
7/CD - M *Maintenance*
7/CD - TE *Test Equipment*
7/CD - TR *Troubleshooting and Repair*
7/CD - TR - A *An Introduction*
7/CD - TR - CC *Connections/Cables*
7/CD - TR - DD *Disc Drawer*
7/CD - TR - DM *Disc Motor*
7/CD - TR - L *Laser Adjustment*
7/CD - TR - PM *Pick-up Movement*
7/CD - TR - SP/AC *Signal Processing/Audio Circuits*

7/R *Radio*

7/R - F *Features*
7/R - F - A *Antenna*
7/R - F - M *Modulation*
7/R - F - T *Tuners*

Table of Contents

7/R - F - T - AMT *AM Tuners*
7/R - F - T - FMT *FM Tuners*
7/R - TR *Troubleshooting and Repair*
7/R - TR - A *An Introduction*
7/R - TR - Ch *Checklist*
7/R - TR - CT *Circuit Tests*
7/R - TR - DTR *Digitally Tuned Radios*
7/R - TR - R *Receivers*
7/R - TR - T *Transceivers*

7/R *Receiver*

7/R - VCS *Various Case Studies*
7/R - VCS - Tech ST-S8 *Technics ST-S8*

7/T *Tuner*

7/T - VCS *Various Case Studies*
7/T - VCS - ZXP *Zenith XP Tuner*

7/A - A
An Introduction

Tube Amplifiers

If you were called upon to repair a guitar-type amplifier—especially one of the newest ones—you might open the cabinet expecting to see high-power transistors mounted to large heat sinks to dissipate the energy. What you'll find could surprise you. Even today, many amplifiers use tubes and contain large power and output transformers, and filter capacitors.

One reason is that tubes handle high power easier than transistors. More important (as far as marketing), many musicians seem to prefer the sound.

What might be even more surprising is that the tubes being used aren't of some new or special design. You'll find standards, like 6L6, 5U4, 12AX7, etc. Unfortunately, these tubes are not made in the USA. They bear markings from Russia, China, Yugoslavia, and other former Eastern Block countries.

Here is "new" technology that has been caught in some type of time warp. It is stuck in the 50's. It's something that an older technician can repair without stretching the brain too much. Think of the tube as an FET with a light inside. It has high input impedance and medium output impedance and it is a voltage gain device.

One of the biggest changes in the construction of newer amplifiers, both tube and solid state, is the adoption of printed circuit boards. Not only do circuit boards allow cheaper construction, they standardize component layout and dress of the wiring. The disadvantage is that the boards are more subject to damage should the amplifier fall. Sudden jolts can easily crack the board and pop any number of circuit traces.

MIDI

When you find the specifications of a recent amplifier or pre-amplifier equipment listing MIDI (pronounced Mid-E) capability, or find a MIDI jack on the back of the equipment, you are now pushing the state of the art. MIDI (Musical Instrument Digital Interface) is the standard among manufacturers of amplifiers and manufacturers of other equipment such as music synthesizers. The MIDI is a means of tying together instruments, amplifiers, lights, and other special effects by the use of digital signals. For example, the interface could allow one keyboard artist to control several boards remotely. Included are memory devices that operate

equipment at certain times in a song. A computer, usually a Macintosh, can be tied to the system and can be used to drive the MIDI bus to activate equipment.

With an amplifier, for example, MIDI could replace footswitches with a computer generated on/off signal. Control could be set up to have a keyboardist control various parts of the amplifier rather than have the guitarist do that. The possibilities are unlimited when an amplifier has MIDI capability. In any event, with the MIDI design, expect to find more uses of the MIDI standard and expect to see microprocessor based digital equipment needing repairs.

MIDI Standard

The MIDI standard was established in 1982 in hopes that such a standard would make it easier for musicians to tie together the various building blocks of the music system. As a standard, MIDI calls for digital transmission of 8 bit serial codes at a data rate of 31,250 bits per second. Standard 5 pin DIN plugs are used to connect the cables. The codes tell each instrument whether to respond to the instructions or not (address bits). Every piece of equipment gets the same data stream. On the back of the equipment is usually a MIDI in jack, a MIDI out jack if the device is a controlling unit, and a MIDI thru jack for those pieces of equipment that don't regenerate the data stream. They simply shape the data up a bit and pass it on.

Tools and Test Equipment

The following tools and test equipment are needed when working with amplifiers:

VOM/DMM
Tube Tester
Transistor Tester
Screwdrivers
Nut Driver Set
Soldering/Desoldering Tool

7/A - TR
Troubleshooting and Repair

7/A - TR - P
Preamplifiers

The primary function of the preamplifier is to amplify the low level signal from the pickup so that maximum power out of the amplifier can be obtained. It is also where the dirty work of mixing in tremolo and reverberation is done. The preamplifiers are generally straightforward tube or transistor voltage amplifiers. Separate units are available in addition to those included as part of a combined amplifier/speaker unit.

Amplification levels are such that the gain of the preamplifier can be adjusted to achieve distortion while the power amplifier volume control is reduced to control the sound level out of the loudspeakers.

Tube Preamplifiers

Figure 1 gives a typical schematic for a tube-type preamplifier. Dual jacks are provided for each channel. Having two channels allows the preset of the tone controls for each. Each type needs its own setting in the tone controls. Other than this, both channels are essentially identical.

Although identical in other respects, only channel 2 has reverberation and tremolo capabilities. Immediately after the input jack, the signal is fed to the grid of tube V1, a voltage amplifier. It also goes to the grid of tube V2, another voltage amplifier. From V2 the signal is capacitance coupled to the tone network consisting of 3 capacitors, 3 resistors and a midrange tone control. This control sets the slope or frequency response of the amplifier. From this network the signal is passed to a volume control, the center tap of which goes to the grid of amplifier tube V3.

Bass Control

The signal is passed to another tone network that primarily affects the lower range of frequencies. This is the bass control. It also feeds the treble network and control and affects the upper range of frequencies. The value of capacitors identifies

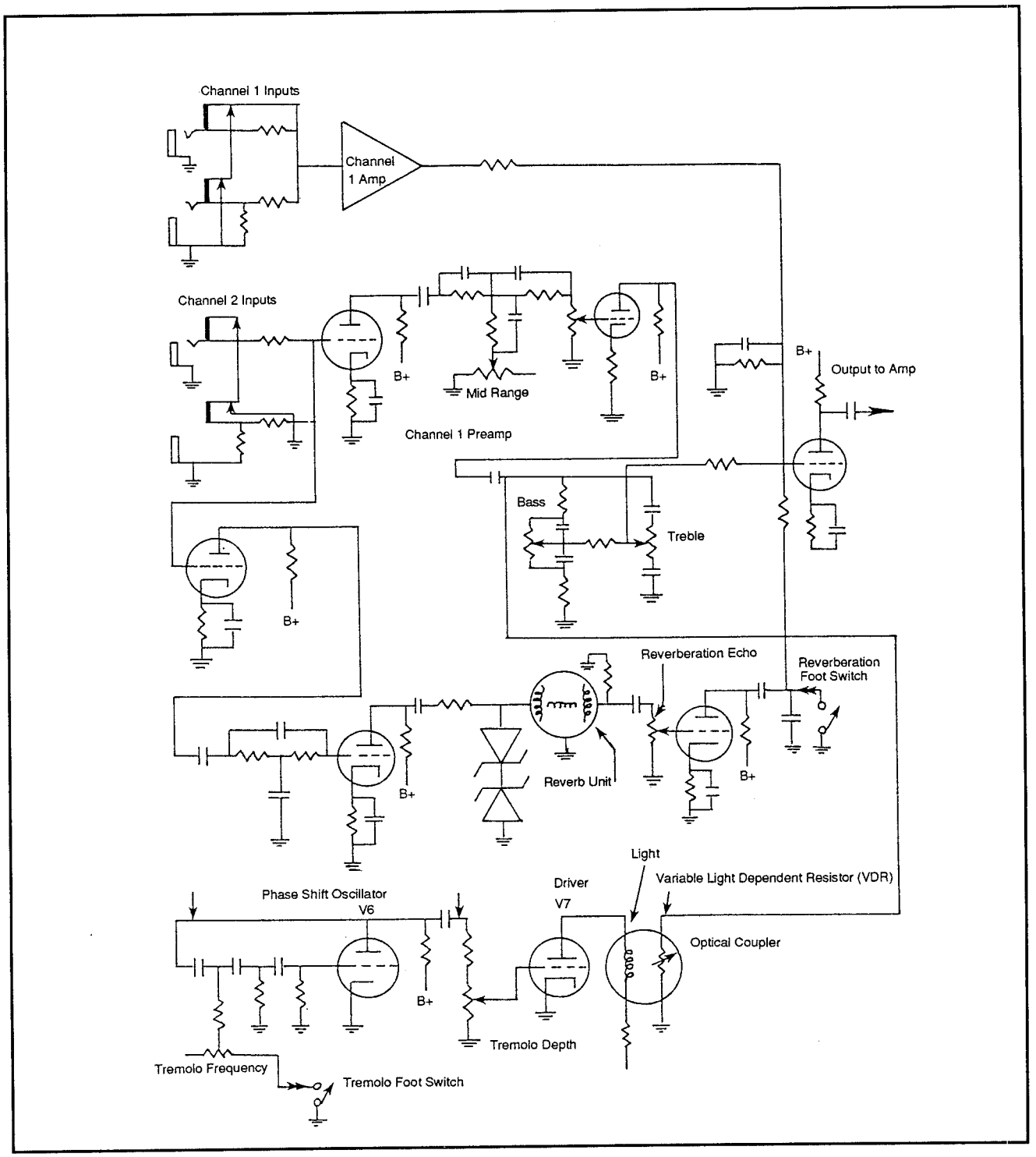

Figure 1: Tube-type preamplifier

the frequency range of each network. The lower value capacitors are in the treble range while the larger capacitors are in the bass range.

From these two controls we feed the signal through an isolation resistor into the power amplifier. At this point the output of channel 1 and the reverberation circuit are combined.

Backtracking to the input of the bass/treble networks a signal is inserted from the tremolo circuit. A varying resistor in the tremolo circuit varies the signal level at that point.

Fleverb Unit

The signal from the input jack through tube V1 is fed to amplifier V4 and then to the reverberation unit. The function of this device is to delay the audio signal so that when it is mixed with the normal signal we can obtain an echo type signal. To do this a coiled spring is driven by V4. The spring vibrates and when the signal reaches the other end it is converted back into an electrical signal. Reverberation is caused by the mechanical delay of the spring compared to the electrical signal. From the spring, the audio signal is fed to the reverb/echo control which is a simple volume control. The signal is amplified and combined with the other outputs into the power amplifier through the 470 K resistor. A foot switch between the reverb amplifier and the 470 K resistor simply shorts the reverb signal to ground.

Phase Shift Oscillator

Tube V6 is a phase shift oscillator. The capacitor-resistor network between the grid and cathode of V6 determines the frequency of the oscillations. These oscillations are in the 4 to 14 Hz frequency range. Frequency is set by the potentiometer which is part of the network.

A foot switch controls the operation of the oscillator by opening one leg of the potentiometer. The value of the resistors and capacitors is critical to maintain oscillation. If the oscillator won't function after changing the tube, measure the value of each of the components. If you can't measure capacitance then you must substitute parts. Use known good parts with the best tolerance you can find.

An oscilloscope connected to the output (plate) of tube V6 is the only way to determine if the circuit is oscillating. If you can get it to run at all, bridge small values of capacitance across any of the three capacitors in the network and try to increase the signal level to obtain reliable starting of the oscillator. Older capacitors, although sealed units, often pick up moisture and change value, resulting in an oscillator that doesn't start.

From V6 the signal is fed through a level control into tube V7. The level control

adjusts the level of the low frequency signal and is known as the tremolo depth control.

Optical Coupler

From the plate of V6 the signal is fed into an optical coupler consisting of a lamp and a light sensitive resistor mechanically connected together and shielded from outside light. The light follows the signal from the tremolo oscillator. This in turn varies the resistance of the coupler which follows the oscillator output. As mentioned before, this resistor is connected to the signal of channel 2 at the bass and treble control. As the resistance varies and follows the tremolo output, the signal out of channel 2 varies.

Solid State Preamplifiers

The block diagram of a solid state preamplifier is virtually identical to the tube versions. The only difference is in the use of transistor circuitry versus tube circuitry. Older solid state preamplifiers use transistors while newer versions employ operational amplifiers as the amplifying and frequency response shaping circuits.

Figure 2 gives the schematic of a transistorized preamplifier. As with the tube preamplifer there are two channels which are more or less the same. Channel 2 provides the tremolo and the reverberation capabilities. The output of channel 1 and channel 2 are combined in transistor Q11 and Q12. From there the signal goes to the power amplifier.

The input signal from the pickup is connected into the channel 2 input jack if the reverb and tremolo features are to be used. This input jack is connected to a darlington pair transistor input amplifier Q1 driving an emitter follower transistor Q2.

The transistor isolates the input amplifier from the load of the midrange volume control part of network 1. This network shapes the midrange frequency response. At the output of this network, where it is connected to the feedback Q3 and output Q4 preamp sections, is a signal from the output of an optical coupler of the tremolo circuit. As in tube tremolo circuits, a phase shift oscillator generates the low frequency oscillations.

A transistor oscillator Q5 feeds driver Q6 which drives the lamp portion of the optical coupler. The tremolo foot switch grounds the output of the oscillator Q5. A control at this point allows the guitarist to set the amount of tremolo.

Feedback Preamp

The feedback preamp Q3 and output preamp Q4 are tied together with network 2, the bass and treble controls. The signal is fed into an isolation amplifier Q7.

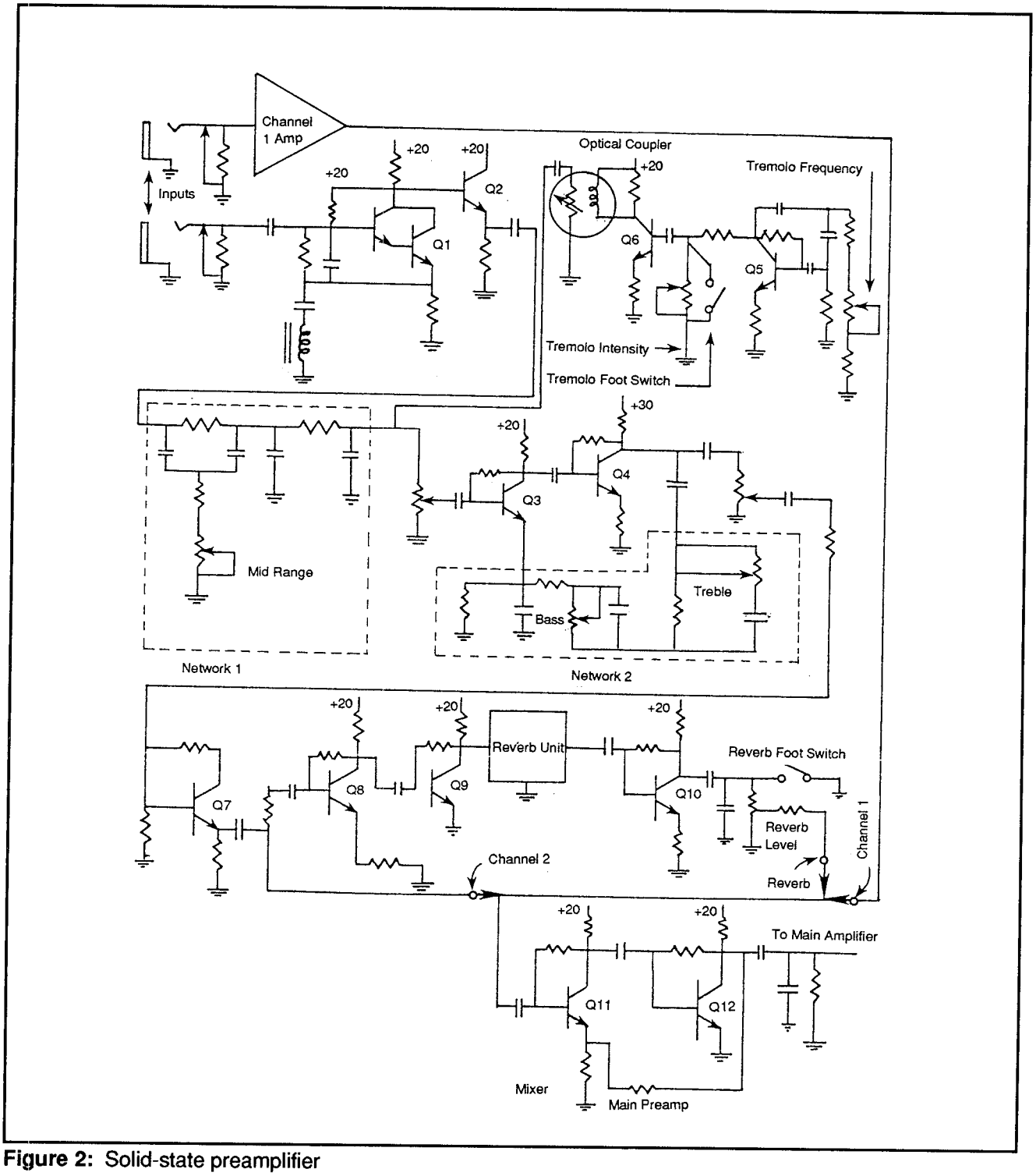

Figure 2: Solid-state preamplifier

From there the signal goes to transistors Q8 and Q9 which drive the spring reverberation unit. Output is amplified by the circuit of transistor Q10 which has a reverberation level control at its output. Across this control is the reverberation foot switch which simply shorts out the reverberation output if it isn't needed.

Op-Amps

Figure 3 shows several typical circuits of integrated circuit operational amplifiers. These op-amps replace almost all of the transistors in later model solid state amplifiers. Type MC-1741 amplifiers are used in their various multiple pack-

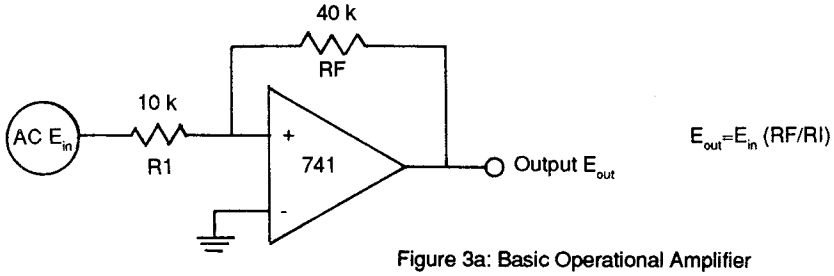

Figure 3a: Basic Operational Amplifier

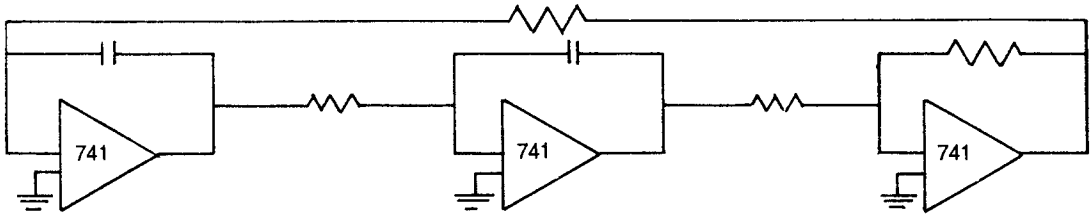

Figure 3b: Op-Amp Phase Shift Oscillator

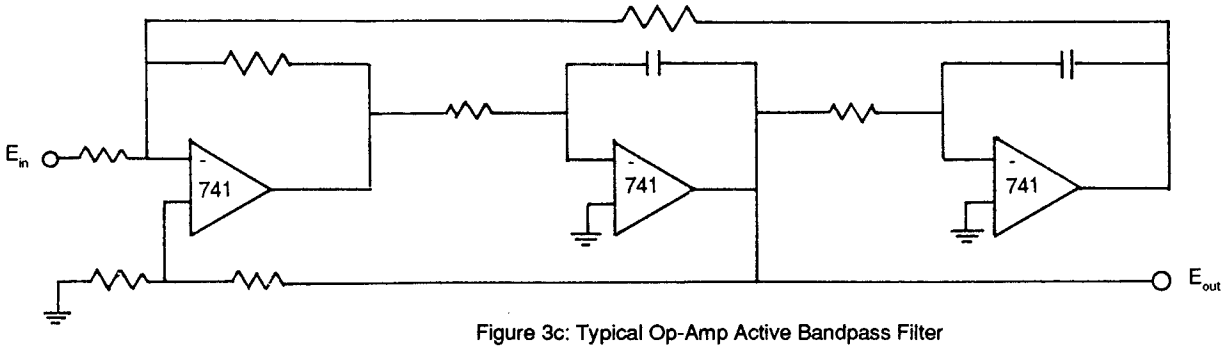

Figure 3c: Typical Op-Amp Active Bandpass Filter

Figure 3: IC operational amplifiers

ages. Type MC-1741 are dual 741's in one package while MC-4741 gives us four 741's in one package.

Operational amplifiers are the basic amplification building blocks of linear integrated circuits. Figure 3a shows a type 741 connected as a simple amplifier. The gain of the circuit can be estimated by dividing the value of the feedback resistor from the output to the input by the value of the resistor in the input. In the circuit shown, the gain is approximately 4. Figure 3b is the diagram of a sine wave oscillator found in a tremolo circuit. Figure 3c is a simple bandpass amplifier/filter that might be found around a bass or treble control. Note the presence of feedback loops. Those are similar to what you might find in a solid state preamplifier using ICs.

In the newer solid state preamplifier circuits, FETs are often found being used as series switches to select channels as well as options such as reverberation and tremolo. The FETs give a quieter switching response than the footswitch connection directly into the circuit.

7/A - TR
Troubleshooting and Repair

7/A - TR - SSA
Solid State Amplifiers

Figure 1 shows the schematic diagram of a generic solid state guitar power amplifier. In this case a coupling transformer is used between the driver transistors and the output transistors.

Newer amplifiers use more fancy bias schemes to eliminate this transformer. Some of the older transistor amplifiers had two sections—a bass section driving 16 Ω "woofers" and a treble section driving 8 Ω horns or "tweeters." The two amplifiers are virtually identical and only one is shown. As in the tube amplifiers, access to the power amplifier is through a jack that bypasses the preamplifier.

NPN Amplifier

The signal is fed from the input jack or the preamplifier to an NPN transistor voltage amplifier Q1. Linearization of this amplifier is done with a feedback loop from the output of the power amplifiers. A driver transistor Q2 provides current gain to drive the driver transformer. This configuration is a grounded collector PNP direct coupled to the voltage amplifier.

The NPN output transistors are arranged in darlington pairs with the proper phasing determined by the driver transformer. Separate bias adjustments are available for each pair of transistors. Power for the bias potentiometer is from the B+ and B- supplies through resistors R1 and R2 and the diodes D1-D4 and zener diodes Z1 and Z2. The DC voltage at the point where the two darlington pairs are connected should be approximately zero. One side of the loudspeakers is directly connected at that point with the other side going to ground.

If a transistor is not biased properly, the voltage may damage the loudspeaker, or blow it out. A slight DC voltage at this point may bias the position of the loudspeaker cone either in or out resulting in some distortion. Be careful in arbitrarily readjusting these bias pots. The distortion of the speaker may be what the guitarist wants. You may be better off leaving things as is unless you are trying to fix a problem in the power amplifier.

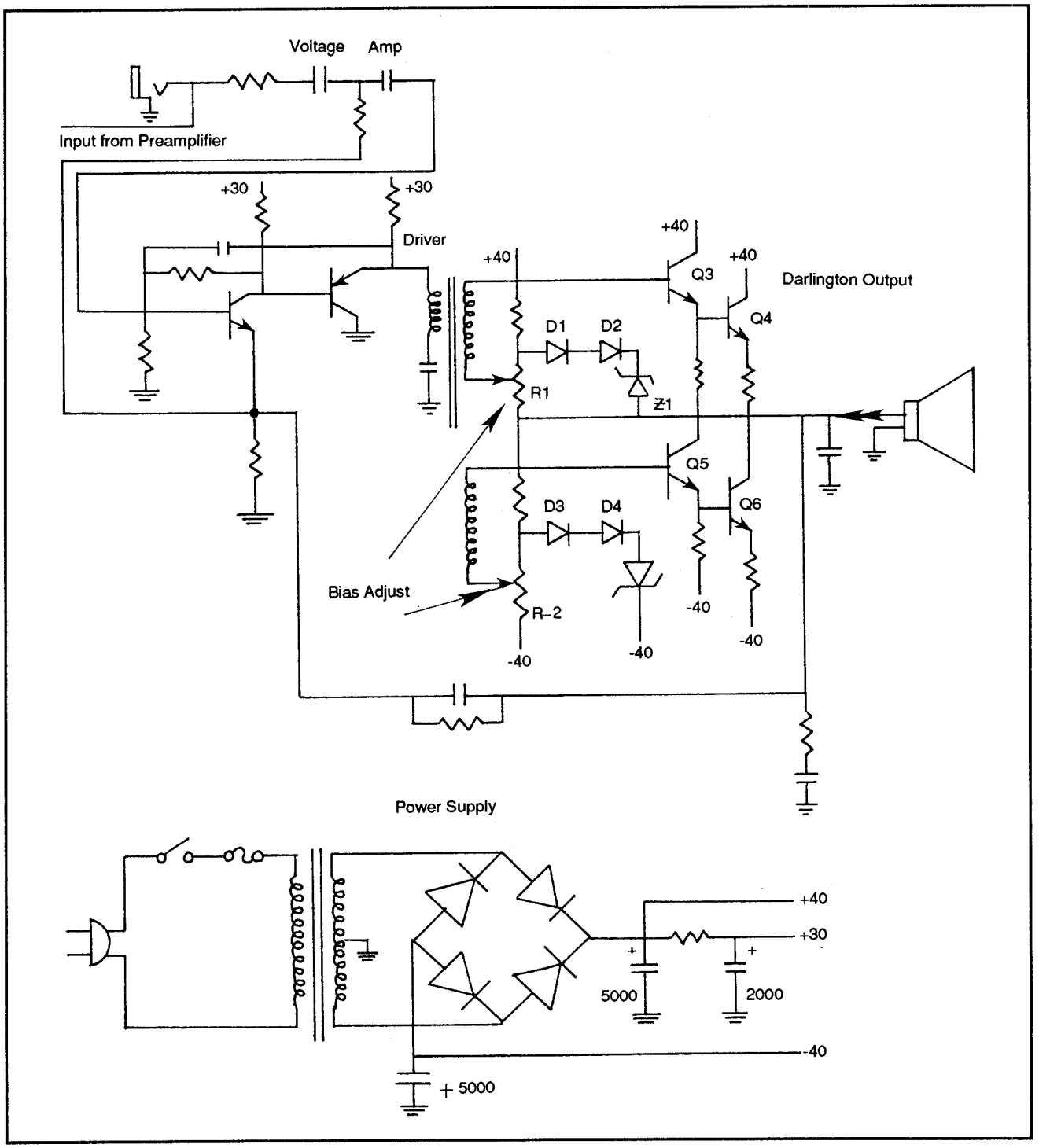

Figure 1: Solid state amplifier schematic

In solid state amplifiers that have only one power supply, the junction point of the output transistors is at a point which is approximately 1/2 the B+ voltage. Instead of direct connection, loudspeakers are connected to the amplifier output through a large electrolytic capacitor. This eliminates the DC being passed to the loudspeaker.

The method used to bias the transistors is not always clear on a schematic. Manufacturers use some clever schemes to get this bias. About all you can do is check the value of the various resistors to determine if they are within the tolerances marked on them. Transistors are usually go/no-go devices. They seldom "age" and change values.

Before adjusting any potentiometer, be sure of what you are doing. Service information is indispensable. It is often best to leave adjustments alone.

The power supplies for transistor power amplifiers are usually of the bridge type, enabling the generation of both positive and negative voltages. Current requirements for each polarity are similar since the current "hogs" are the darlington output pairs.

As described in the section on tube amplifiers you should be very careful when using a variac for testing a transistor amplifier. As the voltage is raised, the bias on the various transistors changes dramatically as transistors start to draw current. Don't be surprised if nothing works right until you approach the normal operating voltages. The light bulb test is good to pro-tect an amplifier that you suspect has a shorted transistor.

7/A - TR
Troubleshooting and Repair

7/A - TR - TA
Tube Amplifiers

Figure 1 is a schematic diagram of a generic power amplifier. Although all amplifiers differ, only minor changes are made from year to year. Figure 2 shows the base pinout of some of the most common tubes. This, too, remains the same.

Most amplifier units contain preamplifiers in addition to the main power amplifier. Some power amplifiers are wired directly to the preamplifer while others have a jack available so the power amplifier can be used by itself. The audio from the preamplifier or an external source is fed through capacitor C1 into the grid of a triode amplifier. Resistor R1 provides bias for this amplifier from the bias source established by resistors R2-R4. The cathode of this first section is directly connected to the cathode of the second section of the same tube (V1). The grid is AC grounded through capacitor C2. The pair comprise a cathode coupled phase inverter. The result is a signal through C3 to output tube V2 which is 180 degrees out of phase with the signal through C4 to output tube V3.

Bias

Bias on the output tubes is adjustable through potentiometer R7 and resistor R8 from the negative voltage source consisting of diode D1 filtered by electrolytic capacitor C5. If the bias voltage is reduced, more current will be drawn through the output tubes. Saturation will occur at lower signal levels. If the bias is set too high, the tubes can effectively be cut off, requiring more signal level to reach saturation.

The screen grids are connected to a B+ source through resistors R9 and R10. Output from the plates of the tube are fed to the loudspeakers through output transformer T2. A bit of feedback is applied from the secondary of the output transformer to the bias network of tube V1 to prevent oscillations. So far this is standard and found in any high fidelity amplifier since the 1950's. The main difference is the B+ voltages applied to the output tubes.

This is approximately 460 V and is well above the normal operating range for this tube type, but is below the maximum rating of 500 V. These high voltages are necessary to get the needed 50 W of power out of the unit.

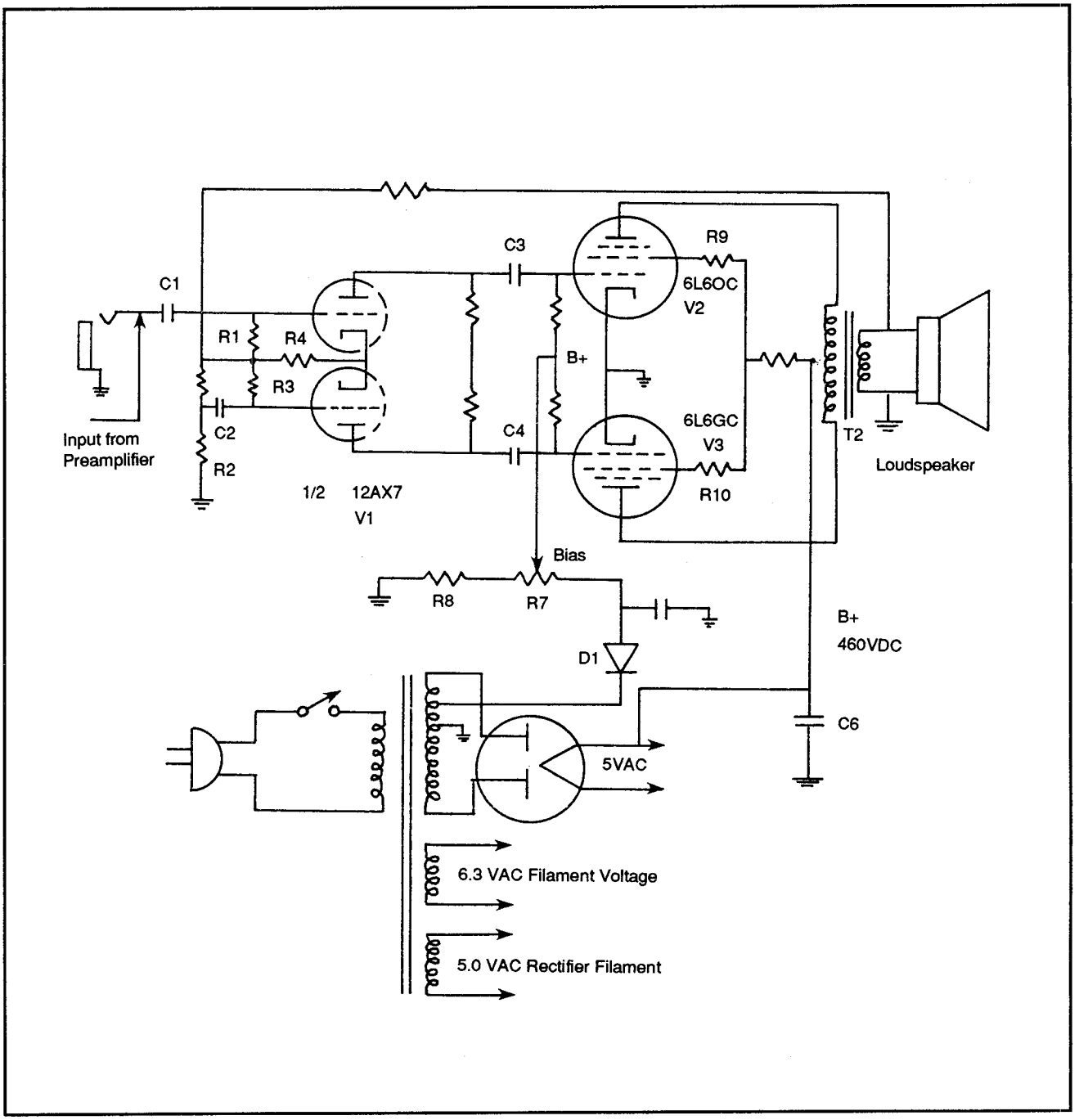

Figure 1: Power amplifier schematic

Warning! *It's important to keep in mind that these circuits are not low-power transistor circuits. Keep safety in mind for you and your test equipment.*

The power supply design is straightforward with a full wave rectifier into a simple filter capacitor C6. As with the tubes, this capacitor is often stressed by high voltages.

Power Transformer A fuse or circuit breaker, power switch and line cord make up the primary circuit to the power transformer T1. For the non-tube technicians, the other winding on the power transformer provides the filament voltage to heat the cathodes of the tubes. When heated, the cathode emits electrons which are drawn to the plate by the positive voltage on the plate of the tube. On the way to the plate they pass through the control grid. The negative bias voltage and the signal voltage on this grid vary the number of electrons that reach their destination, the plate. A small change in voltage on the grid causes a large voltage change on the plate. In simple terms this constitutes signal amplification.

Electron Emission After a period of use, the electron emission of the cathode of a tube drops off, resulting in decreased amplification from the tube. Output tubes are usually replaced in pairs using the same manufacturer and manufacturing date. Often they are sold in pairs with the boxes of the tubes taped together. To determine the quality of a tube, a tube checker is used. This checker measures the gain of the tube.

Flakes Tubes are also subject to noise caused by flakes of cathode material or material used in manufacturing. These flakes find their way into the spaces between the various elements.

Microphonic Tubes can also get "microphonic". This is a vibration of the elements causing a ringing sound if the tube is tapped while in use. Feedback from the speaker can also cause microphonics in preamplifier tubes. Sometimes these flaws can be found by a tube tester, but a simple listening test is best. Replace any tubes that test bad or have noise or microphonic problems.

Leakage Because of the close tolerances between the filament and its surrounding cathode, leakage or even a dead short between the two is not uncommon. The result is a hum that goes away once the tube is removed from the socket. Many amplifiers have a "hum" potentiometer across the filament winding with the center arm of the pot going to ground. This adjustment is usually done once at the factory, but since it is readily accessible from the rear of the chassis, there is a good possibility that it may have been turned. Try rotating the pot from stop to stop and set it for the least hum.

Most tubes are now imported. The available stock may be listed in the various electronics magazines. Often the owner of the equipment has a preference for a certain brand of tube. For example, claims are made that 6L6's from China have better sound than ones from Russia and vice versa.

Capacitors

High voltage electrolytic capacitors used in tube-type amplifiers are getting harder to find. If you have new ones that have been around for a while be sure to "reform" them before applying full voltage. This is done by the gradual application of a DC voltage. You have to limit the current being applied so they don't overheat. This is where your old "condensor" or capacitor checker can earn its keep by measuring not only capacitance but electrolytic leakage.

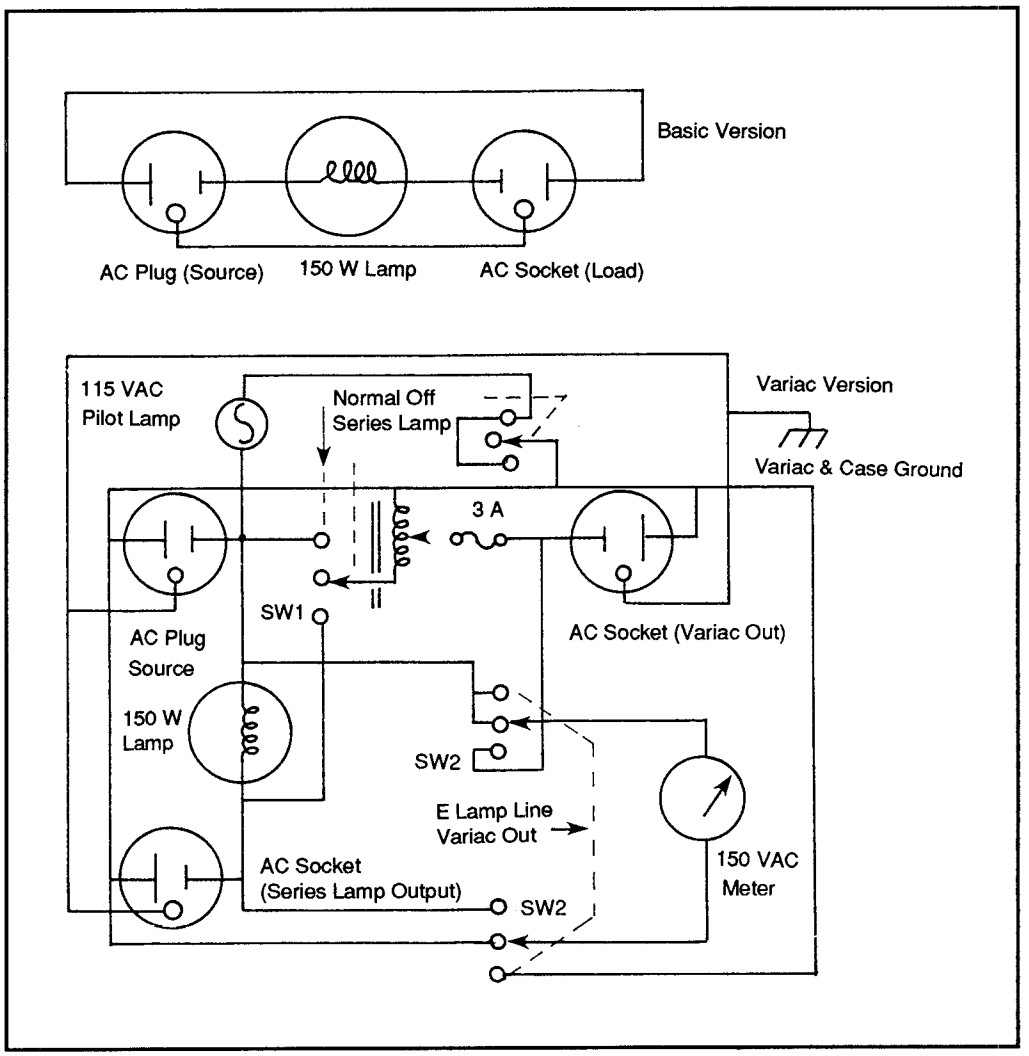

Figure 2: A simple amplifier output tester

If the problem in the amplifier isn't immediately obvious and the case appears dented or damaged, pull the chassis and look at the circuit board with a good magnifying glass. Search for cracks in the board or in the circuit traces. If there is a crack, patch the board with epoxy cement and bridge the broken circuit traces with wire, flowing solder onto both sides of the trace and the wire.

Figure 2 shows a simple circuit that needs to be the part of every work bench. It uses a high wattage light bulb in series with the load which, in this case, is the amplifier. The amplifier should be plugged into this circuit before it is ever plugged into the wall outlet. If something inside the amplifier is shorted it will blow fuses. With this test circuit in place the worst thing that can happen is that the light bulb lights up.

After repair it is a good idea to again run the amplifier through the light bulb before trying it directly into the wall outlet. The bulb should barely glow if everything is OK. With a little experience you can judge the proper operation of any electronic device. It is particularly useful for the hobbyist that is rewinding a power transformer. Add a variac and a meter to the circuit and you have a versatile unit.

Field Coil

Some older loudspeakers had a field coil instead of a permanent magnet. The field coil was connected in the power supply as a filter choke. The DC flowing in the coil made the coil and surrounding metal into an electromagnet. You may encounter these in some of the older amplifiers with separate speakers. In such cases, when the connecting plug between the speaker and the amplifier is pulled out, not only is the speaker disconnected but the power supply is disabled. This prevents the output from the amplifier from causing damage from a lack of a speaker load.

Separate speakers using PM magnets use plugs with a shorting wire across two of the pins. Again, the purpose of the wire is to disable the power supply when the speaker is unplugged.

7/A - VCS
Various Case Studies

7/A - VCS - KA
KB-100 Keyboard Amplifier

Solving a Fuse Blowing Problem in a Keyboard Amp

In this case study we repaired a Peavey KB-100 Keyboard Amplifier that was blowing a fuse whenever power was applied to the unit. When the amp was brought into the shop, it was clean and unscratched showing no apparent signs of abuse whatsoever. Our first thought was to suspect the power supply circuitry, since the amplifier blew the fuse the instant power was applied.

Disassembly and Inspection

We disassembled the unit by removing the amplifier board from the enclosure, and examined the PC board for charred components, loose or broken wires, and so forth. We performed this visual inspection because burnt components can quickly narrow the section to troubleshoot or immediately locate the cause of the problem. The inspection also allowed us to identify the power supply and power amplifier sections of the board by observation. In this case, we found that no components appeared burnt, but we identified the power supply section and began the testing there.

Verifying the Customer's Problem

To verify the customer's complaint, we inserted a new, properly rated fuse and applied power to the amplifier. The fuse blew instantly and, as expected, the amplifier then had no response — no output signal was present.

Initial Troubleshooting Procedures

Our first step in troubleshooting the amp was to remove the connector from secondary side of the transformer, insert a new fuse, and apply power. Then we

The Peavey KB-100 Keyboard Amplifier arrived at the shop in good condition.

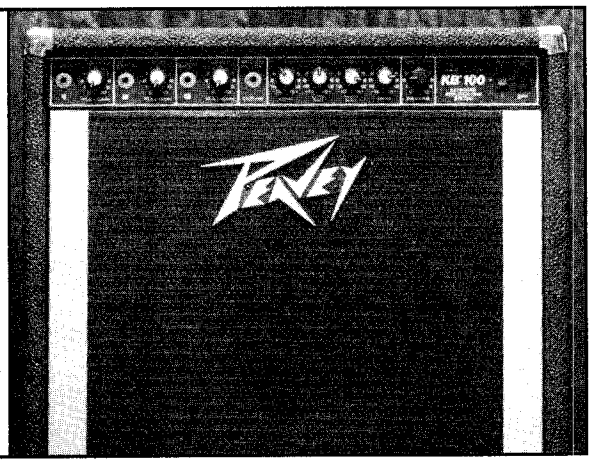

The amplifier (rear view) is encased in the upper part of the speaker enclosure.

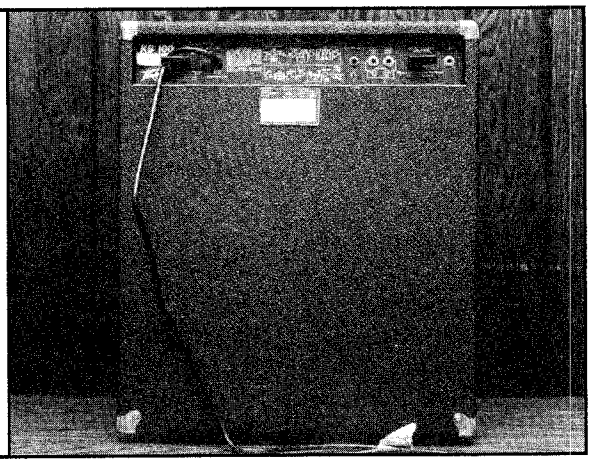

You need to remove screws at the top and back to take the amplifier out of the enclosure. The speaker connections must also be detached.

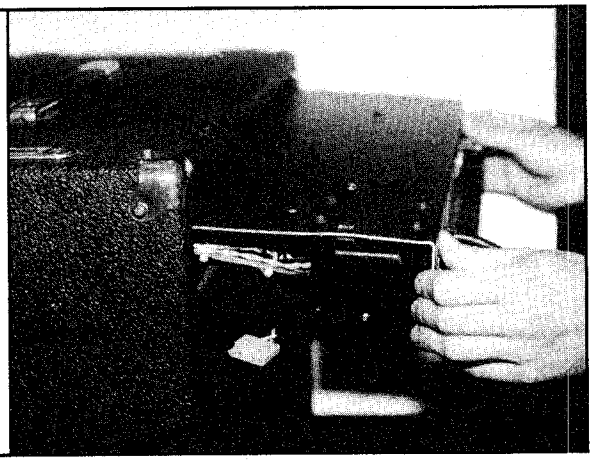

A view of the component side of the amplifier's PC board.

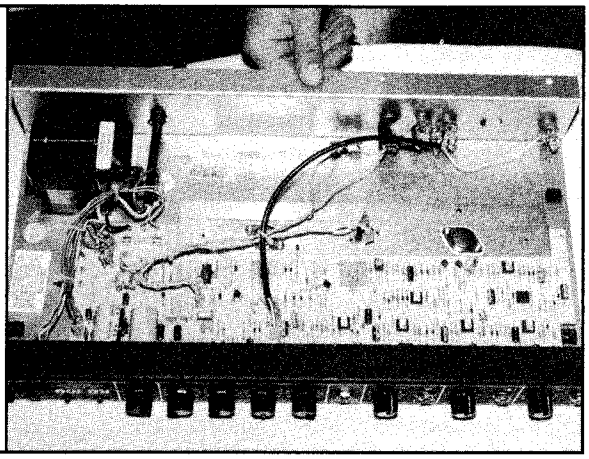

The first step in troubleshooting the power supply is to remove the transformer connector from the PC board.

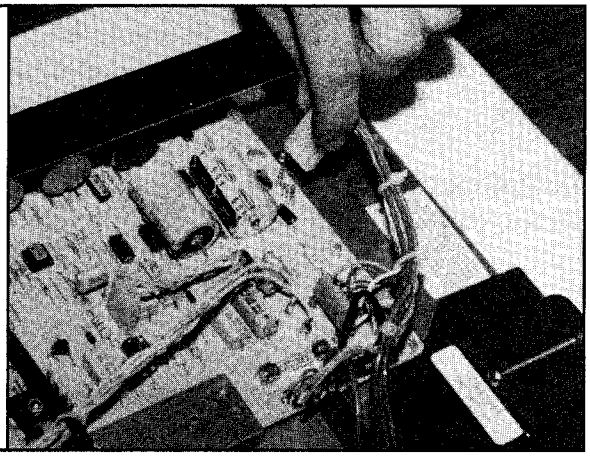

Measuring the output of the transformer with a DMM. The measurement shown is made between the center tap and the outer wire of the transformer.

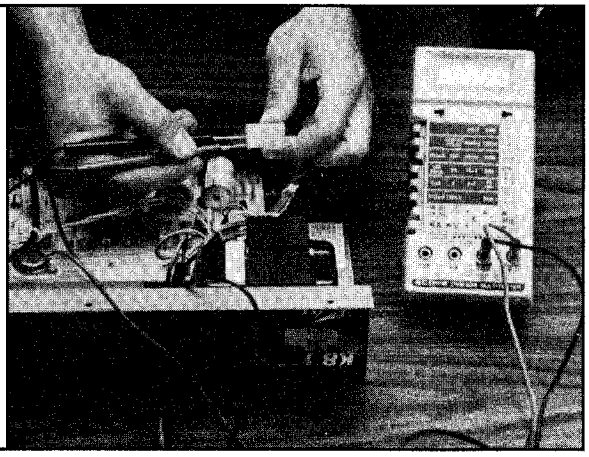

measured the voltage between the center tap and outer wires. This technique allows you to start at the beginning of the power supply circuit and verify that the transformer is working properly. We looked for symmetry between the voltage across each outer leade with respect to the center tap, as well as a 1:2 ratio between voltages acrosss the center tap to outer lead and outer to outer leads.

Symmetrical Voltages

We found 32.5 V between each outer lead with respect to the center tap. We also found 65 V between the two outer leads. This looked good because of the symmetrical 1:2 ratio. Also, the new fuse that we put in did not blow.

Troubleshooting the Power Supply

Since the transformer appeared to be outputting a normal voltage, we assumed the problem to be on the board. We then decided to measure the resistance of the input to the board from the transformer secondaries. Measuring the input resistance of the rectifier section (see Figure 1) helped us to find out if there were any excessive loads on the transformer.

Unsymmetrical Resistance

We measured 1 MΩ between the input to the center lead and the input to the left outer lead. However, we measured 21.5 KΩ between the input to the center lead and the input to the right outer lead. As with the transformer voltages, these resistances should have been equal and symmetrical. Realize that both these

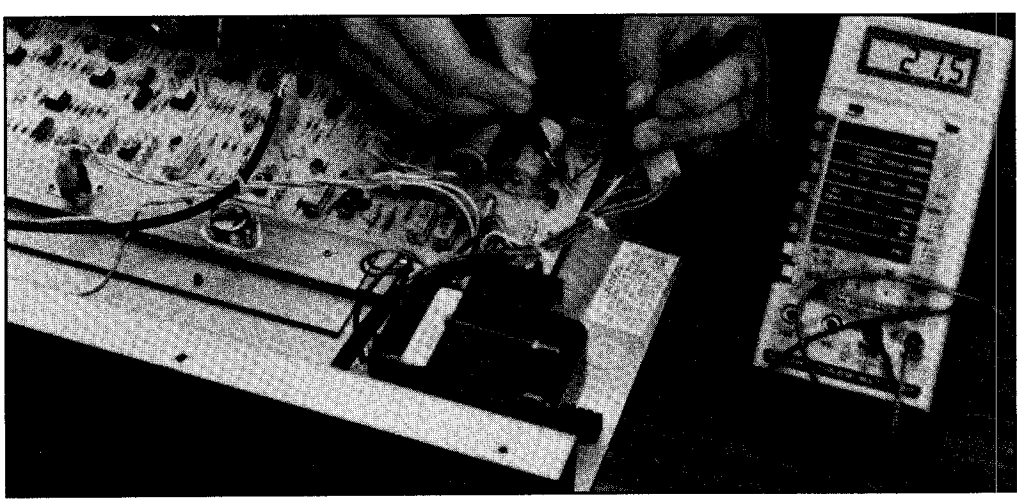

Figure 1: Measuring the input resistance that the transformer "sees," which is the effective resistance of the rectifier circuit.

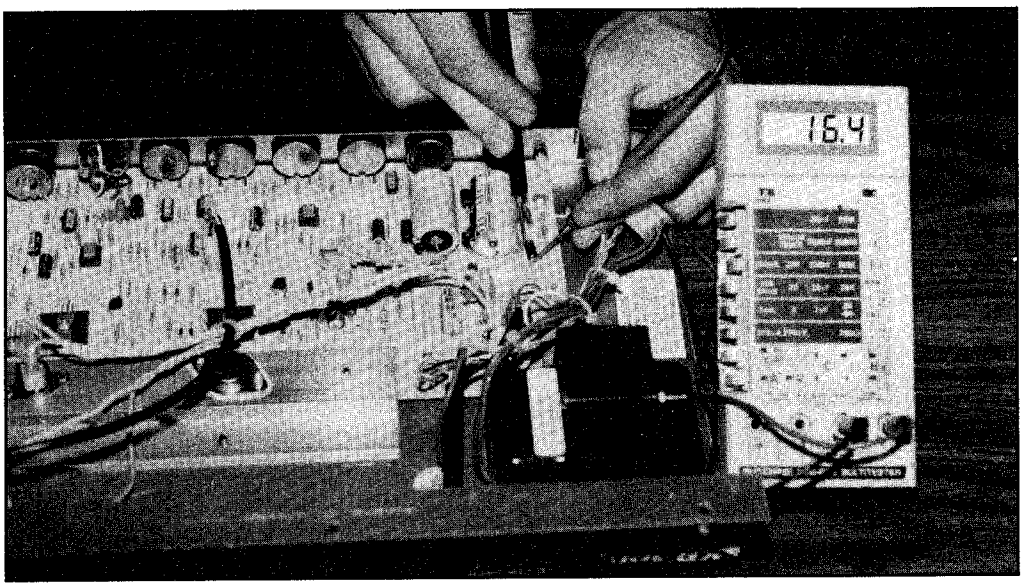

Figure 2: Testing a randomly selected rectifier diode (measuring the forward biased direction); notice that the measurement is a finite resistance.

measurements were taken with the test probe attached to the center lead. The polarity of an ohmmeter when testing diodes is critical. The unsymmetrical and extremely low resistance led us to suspect a defective rectifier diode. Although no physical damage appeared on any diodes, one could still be defective. Rectifier diodes often short in the reverse bias direction when an excessive potential appears or a spike occurs.

Checking Diodes

At this point, we began checking the resistance of each rectifier diode (in both directions) located within the power supply section (see Figures 2 and 3). One of the diodes measured 20 KΩ in one direction and 1.5 KΩ in the other. A diode is supposed to measure some resistance in one direction and infinite in the other. As a result, we desoldered it from the board and measured it again; the results were the same. Thus, we found a defective diode, marginally shorted in the reverse bias direction. This can definitely cause a fuse to blow. The number on the diode was a 1N5401. We obtained one and soldered it onto the board (see Figure 4). We then re-measured the resistance between the center lead and right outer lead of the rectifier input. We found that the input resistance returned to a high value, symmetrical to the other side.

The final step was to reconnect the transformer output and apply power. If the

unit turned on, we could then verify its operation. Sure enough, the amplifier turned on. We operated the amp continuously for five hours to ensure that the problem was fixed.

Conclusion

Notice that we never checked the actual power amplifier circuitry. Blown fuses can result from power supply problems. Also, we worked on the unit without the aid of a service manual, so we never actually knew the proper values for any voltages in the circuit. Instead, we relied on symmetry to expose problems. Although one of the diodes was not completely shorted, it had low enough resistance to draw excessive current from the transformer to blow the fuse. We never determined why the diode broke down to begin with. (Unless the customer supplies us with this information, it's tough to figure out what happened. For example, a customer might tell you something like this: "my friend turned on the air conditioner when I was using the amp, and it stopped working." This would indicate that a power spike most likely destroyed the diode.)

As we already mentioned, we completed this repair without the help of the

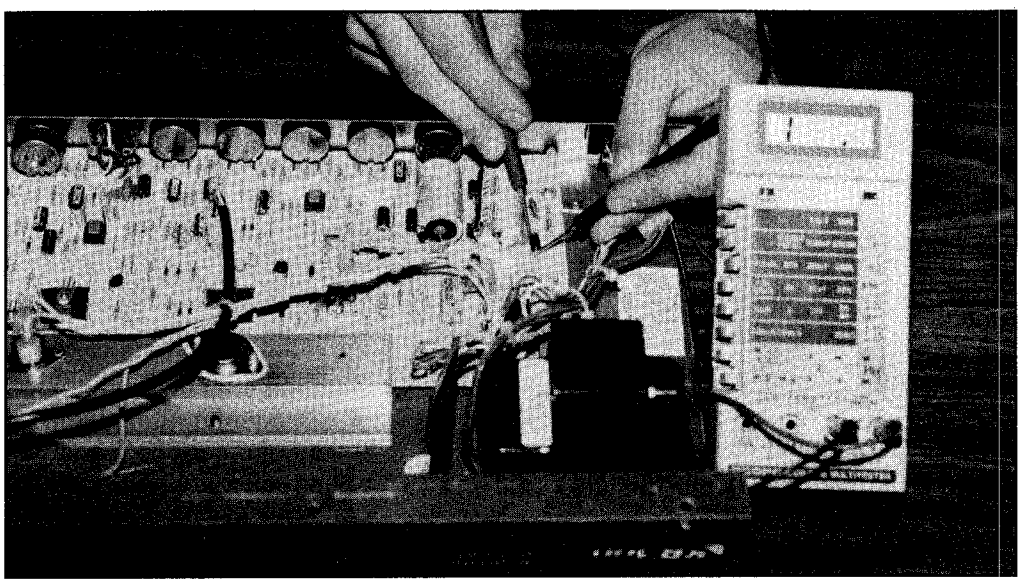

Figure 3: Testing the same rectifier diode (measuring the reverse biased direction) that was tested in Figure 2; notice that the measurement is an infinite resistance, indicating a properly operating diode.

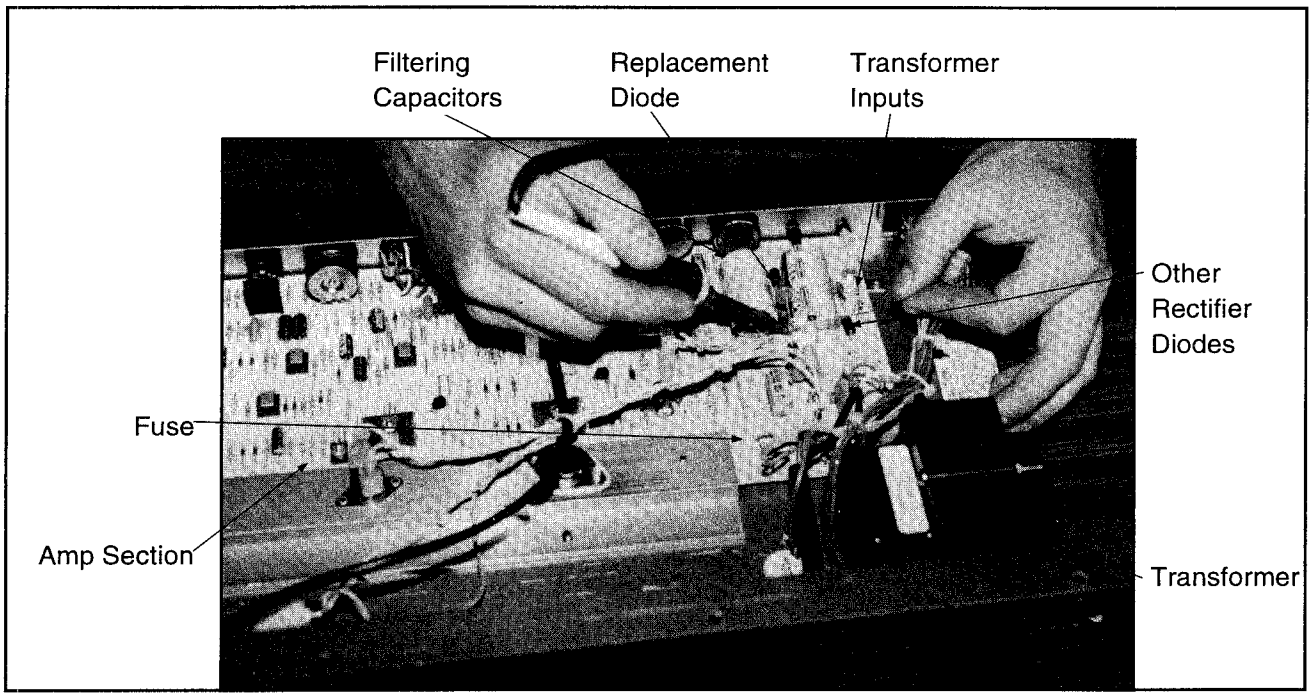

Figure 4: Replacing the defective diode (the photo also indicates relevant parts of the amplifier).

manual. It is our belief that manuals should not be purchased until necessary. Some repairs can be accomplished using basic knowledge about circuity along with practical experience. Also realize that we did not use expensive test equipment. Some repairs need only a DMM and basic soldering tools. On the following pages is a flowchart that describes this repair, and gives some general directions that may have been taken if the repair had worked out differently. — *Dana DeMeo*

Problem: Fuse blows whenever amplifier is turned on.

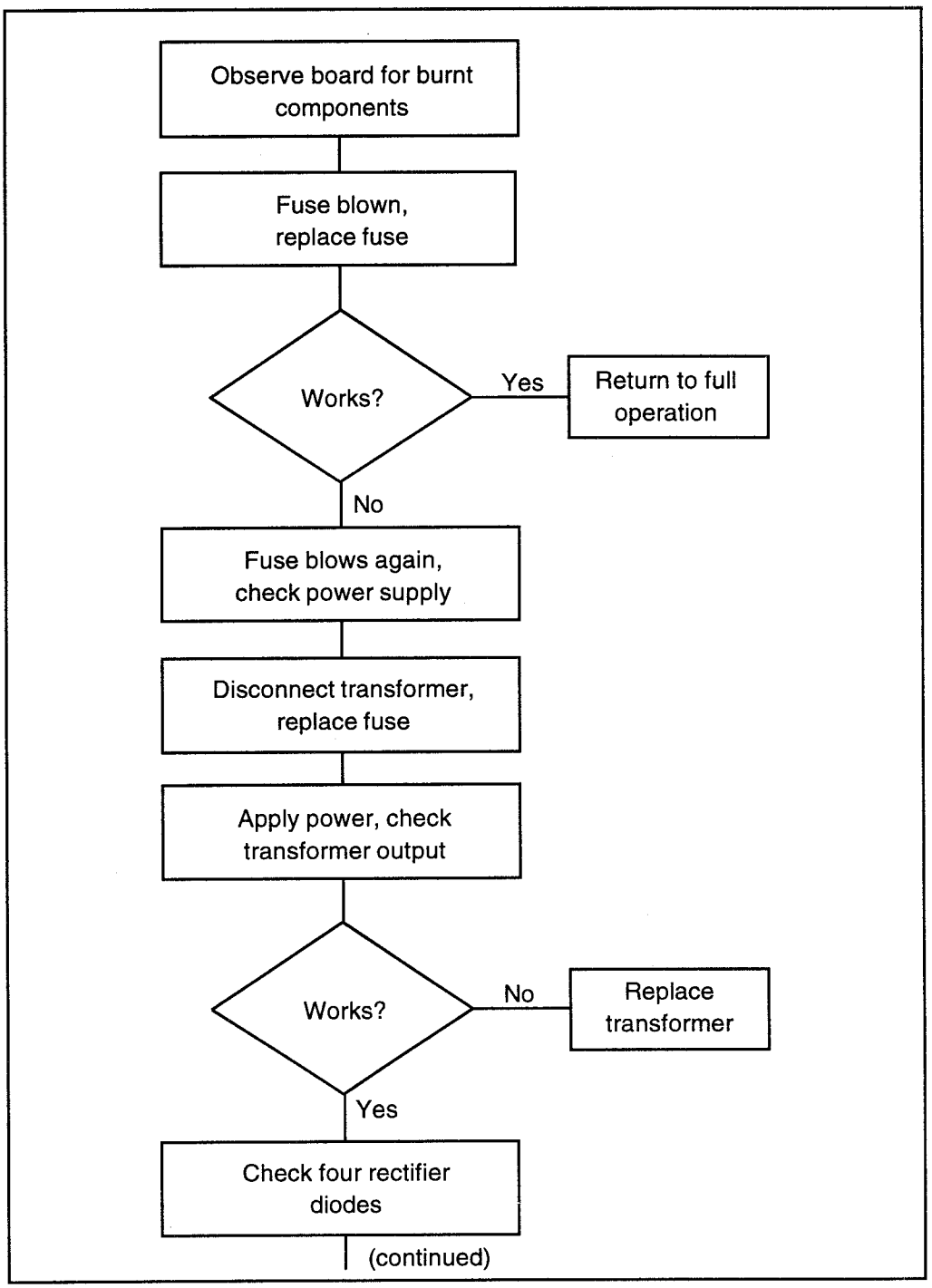

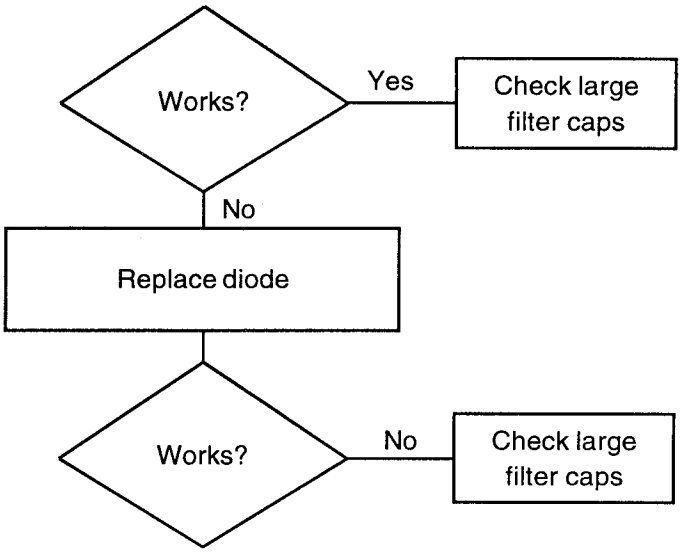

Conclusion: Replacing the defective diode restored the amplifier to correct operation.

7/CD - F
Features

7/CD - F - CDPD
CD Player Design

Most consumer CD players on the market employ the front loading single disc method, though multi disc player systems are slowly replacing these. Most CD players now use a tri-laser beam pick-up with very few, if any, single-beam systems being sold. However, even a well aligned single-beam laser CD player can outperform a badly aligned tri-laser system.

Power Up

When powered up, the CD player will look to see if a disc is loaded. If so, it will scan the disc (and may begin to play it). Otherwise the unit will display a message like "DISC" or "Ld," prompting you to load a disc into the unit. Some of the more expensive models may take a bit longer to be ready as they run a set of diagnostic tests on their internal components to make certain that all of the electronics are working properly.

Display Panel

The unit will have some kind of lighted display panel, most often made with a Liquid Crystal Display (LCD) or Light-Emitting Diode Display (LED). LED displays usually are more colorful than LCD displays, but both serve the function of relaying information to the user.

Usually the information on the display is about the disc when loaded, such as track number, elapsed time or time remaining on a track (song or selection). When a button such as Play, Reverse, or Forward is pressed, it may be displayed on the display panel.

Figure 1: CD player

Connectors

The rear panel of the CD player is not as dramatic as the front panel. This is where the output connectors, the power cord and a shock hazard warning for opening the cover are located.

Some players may have a separate fixed output, line output and subcode output. In general, the line output is used for hooking the unit to your stereo system or any unit with a line input. It will have an output range from 0.5 V to as high as 3.0 V.

This is more than adequate for most amplifiers. It also shows you that when connecting the CD player to the amplifier, it's best to consult the manuals for both to be sure that the output of the player is suitable for the input of the amplifier.

Some CD players will have a turn screw which will change the output voltage to vary in the line output voltage range. Changing this is only recommended when equipment and specification sheets are available for matching the CD player to an input device.

Newer players are adding the ability to view the digital stream of decoded information as outputted. This pulse code modulation (PCM) contains the same information that was decoded by the laser pick-up device. The advantage of this data is that it can be changed digitally before it is converted to an analog signal for listening.

Subcode information is the section of data encoded on a CD that is relevant to the elapsed time, track number, indexes and other nonmusical information. Most consumers have no need for these final two output options, but they are available for those who desire more.

Differences

Different compact disc players have different functions. Icons may be used in place of words for selected functions, and some functions may do more than one thing depending on how selected.

Some CD players may have a headphone jack and headphone control level built in for listening directly to the CD without an external amplifying system. In such cases, the player will have an internal amplifier.

Most CD players come with a remote control. In fact, it is becoming almost impossible to buy a piece of electronic entertainment equipment today that doesn't have some kind of remote system.

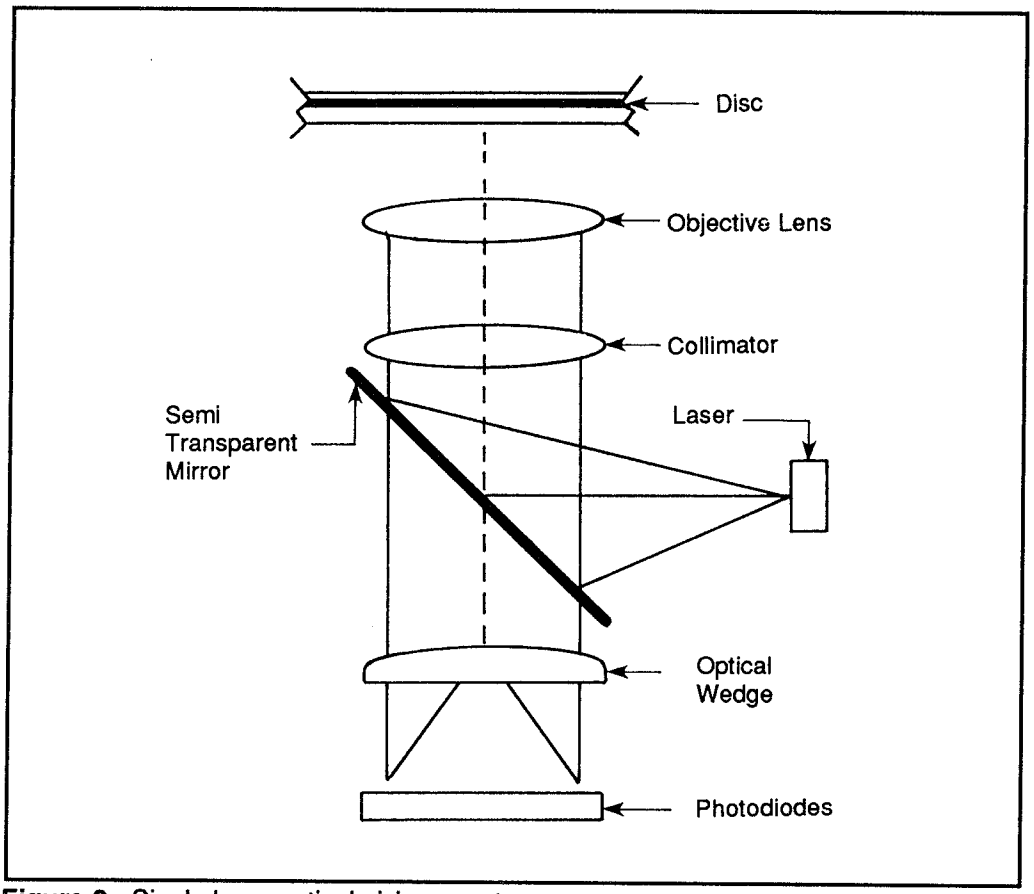

Figure 2: Single laser optical pick-up system

Many CD players don't allow you access to all the functions available without a remote.

Next we look at what can be found in a CD player. Short of having a degree in electronics and opening up a CD player to see what it can really do, there are a few things to consider. Among these are: multi laser versus single-laser; degree of oversampling; filtering; D to A converters; error correction; and player construction.

The Laser Beam

Two types of tracking systems have emerged in CD technology—single laser and multi-spot laser. A single spot laser is used to read the information from a disc and provide control signals to maintain tracking and focusing. If the beam deviates from the center of the track, the amount of reflected light will change. This change is registered and used to change the alignment of the optical tracking

device. Also, if the unit is out of focus the player can detect this and adjust the beam to compensate.

A multi-spot takes a single laser and splits it into three different beams via a prism. The center beam is used to read the information (pits and lands) while the other two beams scan in front of and behind the main beam providing focus and tracking information.

With these beams ahead and behind the main beam, any misalignment can be detected faster than in a single beam unit and can be adjusted more quickly to small changes, thereby tracking more effectively.

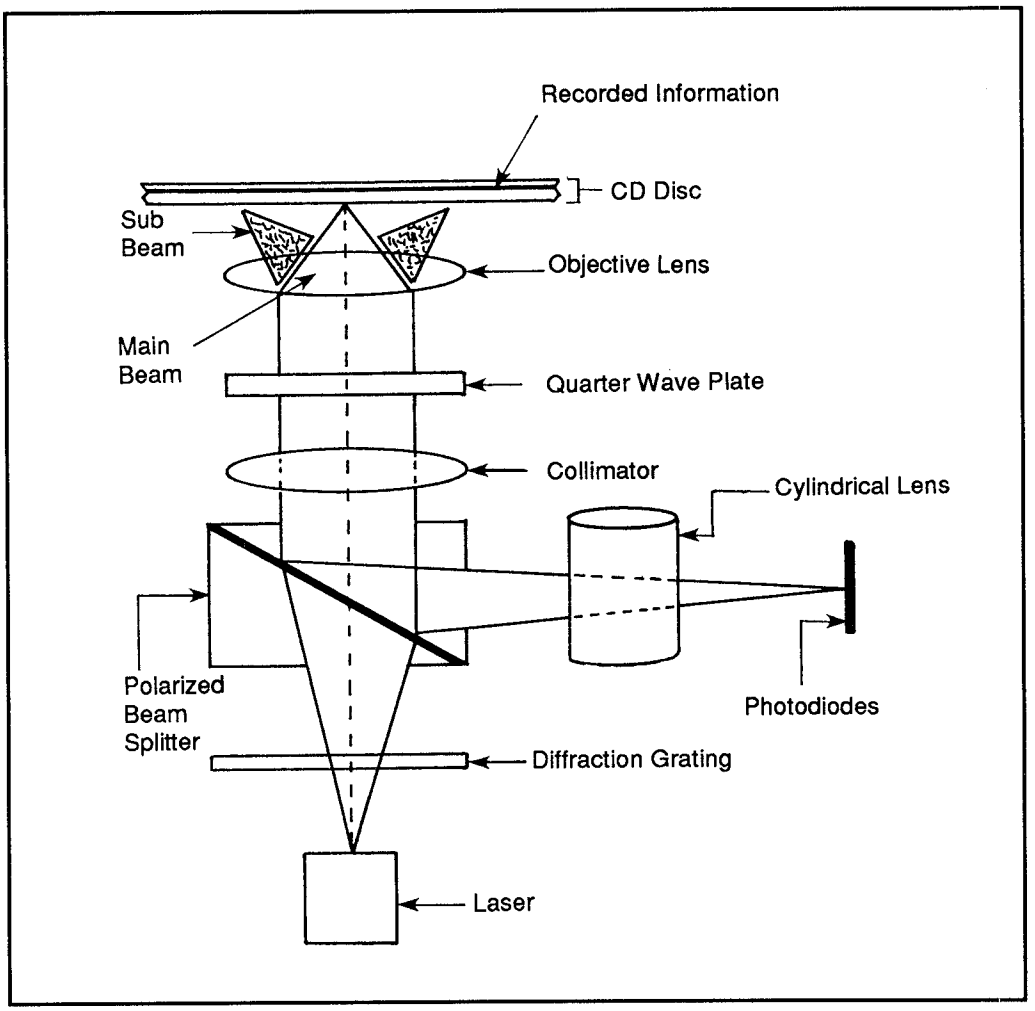

Figure 3: 3-beam laser optical pickup system

Both can still be purchased, though most manufacturers since the early part of 1990 have been using only multi-beam pick-up devices.

A big bold "3 Lasers" used to be printed on the unit, but now it is just assumed to be a tri-laser pick-up system.

Sampling and Oversampling

Sampling is the road from analog to digital. Sampling takes discrete samples of an analog signal at regular predetermined intervals. Oversampling can be single, double or quadruple. Many believe that 2 x oversampling is sampled twice and 4 x oversampling is sampled four times. This is not true. Oversampling involves only the ratio of the frequency used to sample the signal. 2 x oversampling uses twice the frequency; 4 x oversampling uses four times the frequency.

The average person can hear frequencies up to about 20 kHz. To take enough samples to reproduce one second of sound requires some 40,000 samples (40 kHz), or twice the maximum range of hearing. This is known as the Nyquist Sampling Theorem which states that by sampling at this frequency, the original frequency band can be reproduced completely and accurately.

Aliasing

The maximum bandwidth a CD player can theoretically achieve is 22.05 kHz. Anything above that is cut off due to aliasing. Aliasing is the phenomenon whereby frequencies above half the Nyquist frequency will fold down across that point and interact with the components in the audio band. One might think sounds about 20 kHz would be cut off and not captured by a digital machine. Unfortunately, the upper frequencies are not cut out, but tend to distort the lower-frequencies.

An example of aliasing happens from overtones produced by a musical instrument. A musical instrument which produces a 10 kHz note will have overtones of 20 kHz, 30 kHz, 40 kHz, and so on.

One way to correct aliasing problems in the digital signal is to sample at a high enough frequency to encompass these higher overtones so that the higher harmonics do not cause significant amounts of distortion. A system with normal sampling samples at 44.1 kHz (a little over twice the human range of hearing), double at 88.2 kHz and quadruple at 176.4 kHz. The advantage is that the noise power is distributed over a bandwidth that is four times as wide.

Usually by increasing the oversampling you increase the S/N ratios. The S/N ratio for machines with oversampling increases anywhere from 90 decibels (dB) to over 105 dB, compared to a machine without oversampling, which may have a S/N ratio of 85 to 95 dB.

In theory, a higher sampling unit should be better than a lower one, but this is all dependent upon the sampling scheme used. One manufacturer with a 44.1 kHz clock (normal sampling rate) could out perform another with a 176.4 kHz clock (4 x oversampling), depending on the design of the system.

Filtering

Filtering for a CD player can be either analog or digital. Either way the signal is filtered, it is an analog signal by the time it gets to the speakers. So why have a digital filter at all?

Using analog filtering alone is not enough. Oversampling and digital filtering are basically the same. Both decrease the noise level in a signal. The noise level is called the noise floor, and oversampling decreases the amplitude of harmonics above the 22.05 kHz bandwidth of a CD player.

An analog filter with a gentle roll-off will clean up harmonics of higher frequencies without introducing phase shift into the audio frequencies. If digital filtering is not used (nor any oversampling), an analog filter must be used. The reason is that a signal without some filtering will have the ultrasonic frequencies (those above 22.05 kHz) introduced into the audio signal.

By digitally filtering those frequencies, such as in a double oversampling technique, we push the ultrasonic frequencies (starting at 24.1 kHz) to 68.2 kHz. Now that the noise no longer begins so close to the human hearing limit of 20 kHz, a low-pass filter with a more gentle roll off may be used to reduce noise.

Existing analog filters are quite effective in removing noise but by themselves have a very limited performance. By combining a digital filter with an analog filter, both in just the right way, the limitations of analog filters can be overcome. Combining a digital filter with an analog filter may mean using oversampling (2 x, 4 x, or 8 x) and an analog filter with a gentle roll-off.

D/A Converters

CD players may have one or two digital-to-analog (D/A) converters. In the latter case, one is dedicated to each channel.

Data comes off the CD in a single stream. The data is demultiplexed into both the left and right channels, and then into stereo sound. A single D/A converter can do this job alone usually at a rate of 88.2 kHz, which is the combined rate of both channels. But a single D/A converter must process both channels independently, left then right, or right then left, and then send the signals out. This will cause one channel to be slightly behind the other channel. A CD player with quadruple oversampling would have to do this at four times the normal rate of 88.2 kHz or at 352.8 kHz (352,800 conversions per second).

Single D/A converters at this speed cost considerably more than two slower D/A converters, one for each channel. The use of two D/A converters eliminates the time lag or phase shift between channels.

A system may use either a 14-bit or a 16-bit D/A converter. A 14-bit converter can mimic a 16-bit converter, but it is less accurate. A 16-bit converter can achieve higher levels of music clarity while also increasing the S/N ratio. Any 16-bit digitally filtered disc player will have the highest possible S/N ratio. In addition, the dynamic range of a 16-bit unit is greater than that of a 14-bit unit.

Newer units on the market claim to be using 1-bit and 2-bit technology or 18-bit D/A converters. What they're really doing is using digital filtering and noise subtraction techniques on full 16-bit samples to produce these additional bits of accuracy.

Vibration

A good CD player will have feet designed to provide the best music playback possible. This may seem irrelevant at first, but consider what happens to a record player when bumped. A CD player can be affected by the same type of problems. The most common of these is skipping. This sounds like missed music as opposed to skipping on a record player where there is an actual scratching sound as the stylus hops over the grooves.

To reduce the effects of vibrations, the CD player needs large-sized feet made of rubber or some other synthetic product capable of absorbing the vibrations. The feet must also be able to support the weight of the player without being compressed to the point that vibrations aren't absorbed. The feet of CD players are chosen carefully and treated with anti-aging and antioxidant compounds.

Any unit will skip if sufficiently disturbed, but a unit properly manufactured should be able to withstand a large degree of vibration.

7/CD - M
Maintenance

Caring for the Compact Disc

When compact discs hit the market, advertisers were quick to state that CDs were indestructible—that dust, dirt, fingerprints, scratches and cigarette smoke would have no effect on playback. One advertiser even claimed that spreading peanut butter on a disc couldn't stop it from playing. (Smearing peanut butter on the label side would probably have no effect, other than to make a mess of the player, but anything opaque or even semi-opaque on the clear side will dramatically affect the playback.)

While some disc players can play a disc that has scratches, fingerprints or contaminants on it, the disc should always be handled with care and kept clean.

Scratch Effects on a Disc

The effect of an occasional scratch depends on how the scratch is aligned on the disc. A scratch across the disc may only cause a few bits of each frame to be lost, whereas a scratch running parallel to the tracks could completely wipe out a series of bits beyond the capacity of the CD player's error correction. Fingerprints and other deposits may or may not have any effect on a disc. This depends upon the chemical composition and thickness of the deposit.

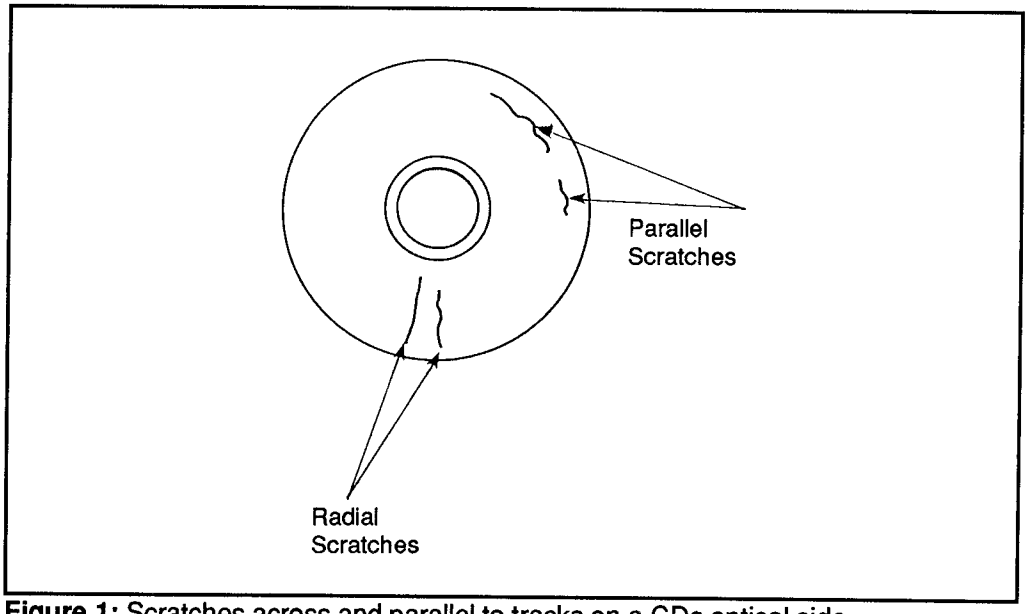

Figure 1: Scratches across and parallel to tracks on a CDs optical side

The disc should always be grasped by the edges. Some disc player loading mechanisms won't allow for this (like an in dash automobile CD player). You will inevitably have to grasp the disc in a manner that may deposit skin oil and perspiration from fingerprints onto the surface. Even so, this kind of handling should be minimal.

Dust

Dust can slowly build up on the disc and cause intermittent skipping. Dust on the CD player can also begin to cause problems as it may slowly find its way into the player, usually through the disc drawer when loading or unloading a disc.

Good Location

Placing the CD player away from the elements is a wise decision. A home CD player should always be in a good location. Many players have black finishes and will absorb heat from the sun. This causes the player to heat up well above room temperature.

Increased heat can age or even damage the internal electronic components by overheating them. Also the increased heat can cause internal rubber and plastic parts like the disc tray, gears or even the laser pick-up system to warp. If a disc happened to be in the unit, it too could become warped and unusable.

CDs can withstand a fair amount of temperature changes, but warping can occur well below its softening temperature of 200° to 230° F. Obviously, leaving a CD or player near a fireplace or on the dash of a car can produce temperatures hot enough to warp it. Extreme cold can also damage a disc, causing it to either crack or cloud. Taking a disc from one temperature extreme to another can be hazardous to your disc's life. In general, a temperature that feels good to you is probably good for your disc as well.

Cleaning the Compact Disc

If a CD becomes dirty and seems to be causing problems during playback, a good cleaning may be in order. (This is the first step when troubleshooting a player that is skipping.)

Compressed Air

The simplest way to clean loose dust from the surface of a disc is to use a can of compressed air. Blowing on the surface of a disc is not recommended. You may put more contaminants on the surface than you are trying to remove.

Cleaning Fluid

Further cleaning can be done by hand, or with a commercial cleaning unit. If cleaning by hand, use a clean, lint-free, soft cloth. The cleaning fluid should be specifically for CDs. Denatured alcohol may also be used. Either way, clean ONLY on the clear side of the disc. The reason is that some labels are alcohol-

based and if they come in contact with alcohol-based cleaners can be dissolved or smeared. Cleaning the label side doesn't improve disc performance anyway, (since the playable side is the clear side), but may be aesthetically appealing.

Never use a dry cloth alone when cleaning a disc as this may leave scratches in the disc. Also, never use cleaners such as benzene, or solvents such as paint thinners. These can cloud or soften the plastic as well as remove the label. They may also dissolve the lacquer coating, and in extreme cases may even remove the layer of reflective aluminum beneath.

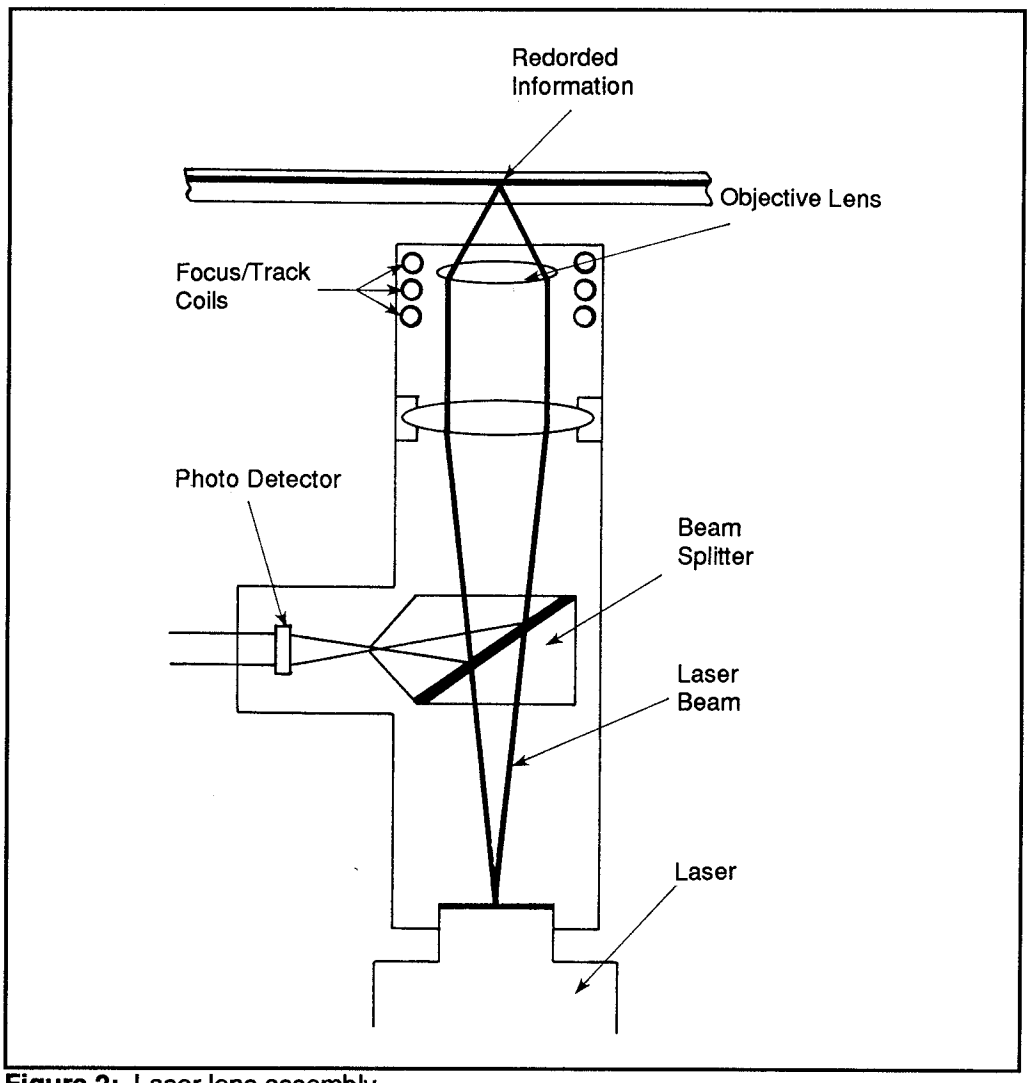

Figure 2: Laser lens assembly

Always clean in straight lines from the center of the disc outward. Never wipe in circles, or by following a circular pattern around the surface.

Cleaning Machines

Commercial CD cleaning machines usually use a compact disc radial cleaning system which occupies barely more horizontal space than a compact disc. The system rotates the disc while cleaning it with a chamois pad. The unit can be either battery-operated or hand-turned.

When purchasing a mechanical CD cleaner, you should try to avoid those units which clean the disc by wiping it along its radius. Likewise, don't buy cleaners that are detergent based, as they will leave residues which can cloud a disc.

Cleaning the Player

Outside

A good practice is to occasionally clean the outside of the disc player whether it is a portable or home unit. Merely dusting the outside of the unit is not enough. When cleaning the outside and using a cleaning fluid, be sure that it is safe. If you are uncertain, experiment on an inconspicuous portion of the CD player to see if it will be marred or discolored.

Inside

Inside cleaning consists of cleaning the disc tray and laser optics, and possibly dusting the circuit board and removing foreign objects. Blow out any dust

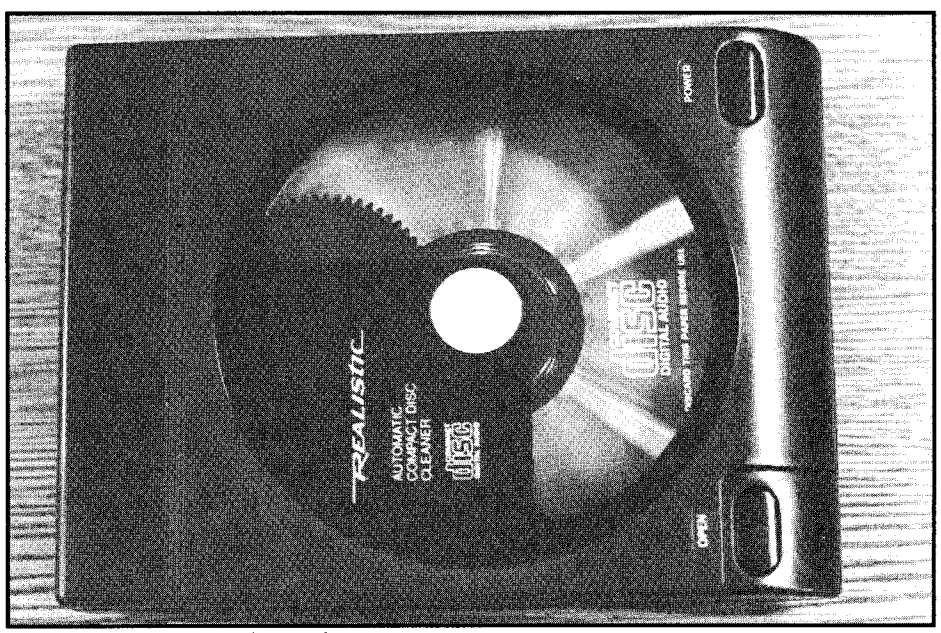

Figure 3: Disc cleaning unit

particles from the inside before cleaning the disc tray and laser optics. This is best accomplished with the unit open and away from other items that the dust may settle on.

It is possible that something has managed to get inside the CD player causing it to function improperly. It could be as simple as an insect sitting on the pick-up optics, or as serious as something conductive that has caused a short which led to more major component damage.

Checking (or cleaning) the inside requires opening the case. This will most likely void any warranty you have. Consult your manual before doing so.

Before beginning, remove the unit from its current location and place it on a static-free cloth or surfaced table. Inspect the unit to determine which screws hold the casing on the player. Carefully remove these and lift the cover away.

Once inside, look for any items that may have fallen into the CD player. If found, remove them, reassemble the unit and try again. If nothing is found, visually examine the interior for any obvious signs of damage such as broken wires, loose connectors, burned components, etc.

Next, look at the optical pick-up unit, if it can be seen, and check to see if the lens appears to be free of contaminants.

Laser Lens Cleaning

Remember that you are dealing with a laser pick-up device and that laser light can be harmful to the naked eye. However, lasers used in most home CD players are at a very low level, classified as class 1 lasers, and shouldn't cause eye damage. Prolonged exposure could be harmful, though. Always clean laser optics with the unit unplugged.

Nothing in the optical pick-up can be serviced, so if a problem is eventually discovered here, the unit must be replaced as a whole. Before you do this, try cleaning the pick-up and the related parts.

If the lens in the CD player is dirty it can be cleaned using lens tissue made for that purpose. Lens tissues are available from most camera stores along with proper cleansers for optical cleaning. A special camel's hair brush can be used for cleaning dust deposits off a lens. Do not use standard brushes or tissues, as these may scratch the optics. Canned air may be used for removing loose dust particles.

Check to be sure that the optical pick-up is moving properly over the travel bars.

Cigarette smoke and dust can cause optics to transverse the travel rods or slide rods and stick in places in CD players using this design. This will sometimes cause disc players to produce dropouts or skipping during playback. Clean these slide rods and afterward apply a slight dab of nonconductive, non petroleum lubrication. (Swing arm pick-up units generally require no lubrication.)

Disc Tray Cleaning

The disc tray requires wiping with a damp cloth. The tray should not require more than this unless some foreign material is stuck to the tray.

PC Board Cleaning

Dust, dirt and nicotine from cigarette smoke can accumulate on the interior PC board surfaces. Normally this causes no trouble, but it's possible for the buildup to be severe enough to become conductive.

Use a soft brush or a can of compressed air to remove loose contaminants from the surface of PC boards. When blowing the unit out, try to place it in such a position so that the debris fall out of and not deeper into the unit.

Use a cleaner degreaser designed for electronic components to get those tough, built up spots. Do not use any household cleaners or oil-less lubricants such as WD-40. These may cause the unit to fail completely. Also, any cleaner that leaves a residue will be unsuitable for cleaning the inside of your CD player.

Electrical contacts and connectors may, on occasion, need to be cleaned as well.

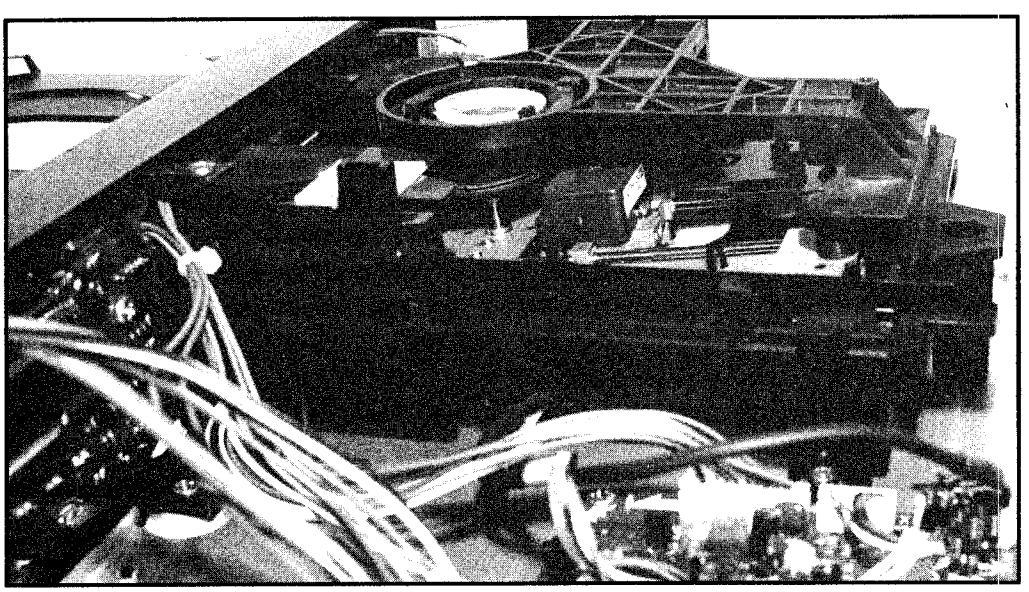

Figure 4: Disc tray assembly

Other contaminants, such as cigarette smoke may also accumulate on the contacts.

Remote Control Cleaning

Cleaning a remote control is simple. Use a slightly damp cloth on the outside of the control to remove any buildup of dirt. Be careful around the lens. It is usually plastic and easily scratched.

The battery compartment can be a source of major problems in remote control failure. If the contacts in a remote control compartment become corroded from battery leakage, remote performance can drop or cease. Clean most of the battery acid from the compartment with a damp cloth, or use a mixture of baking soda dissolved in water on the cloth to neutralize large deposits of acid. If need be, use an electronic cleaner/degreaser or denatured alcohol to remove deposits.

Carefully clean all debris from the compartment before inserting new batteries.

Lubricating

It is wise to lubricate any moving parts after any cleaning or degreasing spray has been used inside the CD player, and at periodic maintenance. Most of the parts requiring lubrication can be found in the pick-up assembly and the disc-loading mechanism. The lubricant should be nonconductive and should not have a petroleum base. Use as little as possible and never use a spray lubricant.

After applying it, spread the lubricant by moving or sliding the part back and forth a few times. If the part won't move easily, plug the unit in, power it up, and press the Open/Close button a few times.

7/CD - TE
Test Equipment

Service Equipment Needed

To service a compact disc player, you need:

- DC voltmeter
- Dual-trace oscilloscope with a bandwidth of about 60 MHz DC
- Frequency counter with a range of 250 MHz and a sensitivity of 20 mV
- AC leakage tester
- Audio tester (line level)

Some CD player manufacturers supply special tools for servicing their units, others do not.

Keep in mind that there are few adjustments or calibrations you can do inside the CD player—and fewer yet if you don't have the service manual for that specific unit.

One or more test discs are needed for checking frequency response, dropout, and alignment of the optical unit. These test discs may be available from the manufacturer. You can make your own error correction test discs as shown below.

Making a Test Disc

Purchase a roll of black-matte tape that is 1/32" wide. (This can be found in art stores.) Place a single strip running on the bottom of the disc from the inside edge to the outer edge.

Make sure that the tape adheres securely to the disc and is trimmed at the edge. Now play the disc in a unit you know is working. You shouldn't hear any skipping. If you do, the player has some severe problems.

Add a second strip across from the first. Play the disc again. Add additional strips one at a time halfway between the others. You should be able to do this for a total of six to eight strips before errors are heard. (Note: This is a great device to try at the store when purchasing a CD player.)

Checking CD players annually with a disc striped like this can be used to determine if optics or laser transport rails are becoming dirty.

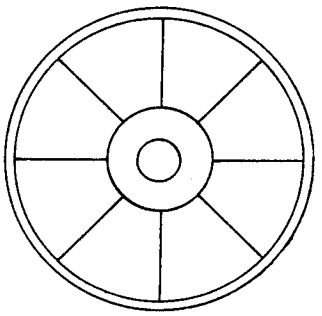

Figure 1: Error correction test disc layout

7/CD - TR
Troubleshooting and Repair

7/CD - TR - A
An Introduction

When a CD player begins to malfunction, there is little an untrained person can do—and little enough for even the experienced professional without the service manual for that specific make and model. Short of the cleaning and maintenance tips mentioned in Section *"7/CD - M"*, all of the internal components are unserviceable without correct training, equipment and information. Most internal components today use surface-mounted technology, which makes replacing individual components nearly impossible. Usually complete sections and even entire circuit boards are replaced rather than trying to troubleshoot to the component level. However, before giving up there are a few things you can check.

As always, begin with the obvious:

Checklist

- Is the unit plugged in?
- Has the power switch been pressed?
- Do you know how to work the various controls?
- Is a CD in the drawer?
- Is the CD player properly connected to the stereo system, and is this system functioning and connected properly to the speakers?

If all the above have been checked, consider testing the cables (for continuity) that connect all the parts of the system. The problem could be as simple as a bad audio cable hooked to the CD player.

The problem could be caused by a photodiode that is damaged, or the laser diode might have burned out. This would be the first probable cause of an internal malfunction. The laser assembly must be replaced as a whole.

Perhaps the digital or analog sections of the player were hit by static electricity or just simply quit. Maybe the disc isn't spinning inside the player, or the disc drawer is jammed.

Components

In the "Troubleshooting and Repair" articles, standard conventions are used to label the various components. The parts are labelled in a generic fashion. The parts list below will serve for reference. Bear in mind that the numbering used is for convenience. These numbers differ considerably from player to player.

Part Number	Device
IC101	Pickup-servo
IC102	Servo driver
IC181	NOR gate
IC201	Motor driver
IC301	CPU (main microprocessor)
IC401	Signal processor and master clock
IC402	Controller
IC403	D/A converter
IC601	Focus controller
IC604	Laser controller

7/CD - TR
Troubleshooting and Repair

7/CD - TR - CC
Connections/Cables

First, start by checking the output cables' connections. Most disc players only have two outputs—to the left and right channels. Testing the cables and connectors is not time consuming or difficult. Check to see that the left channel output cable goes to the left channel input of the receiver or amplifier and the same for the right. If the unit has digital outputs be sure they are not being used as audio outputs.

If these connections are correct, check to see if the amplifier is switched so that the CD player is the source. Most amplifiers have a selector switch or button for selecting the input device. Also, make sure it is the CD player that is not functioning properly. Does the amplifier work when switched to other settings? If so, does the hookup of a different unit to the input which is used for the CD player work properly?

Perhaps all is working, the amplifier, the source input, but not the CD player. Check the audio cables from the CD player. The simplest way to test the cables is to try different cables you know are good. Another easy method is to use a VOM to test them for continuity.

Set the meter to an "Ohms" setting, or to the "Continuity" selection, if it has one. Touch the outer metal shield of one end of a cable with a probe. Touch the other probe to the center pole of the cable. The reading should be infinite resistance. If you get a reading (or an audible sound if your DMM is so equipped), the cable is shorted.

Next, test from the center pin on one end of the cable to the center pin on the other; and then from the outer ground on one end to the outer ground on the other. In both cases the resistance should be almost zero. A high resistance means that the connector or wire has a break. Try wiggling the cable while performing the tests above. This may reveal intermittent shorts or breaks. If all the cables check out OK, reconnect them and see if the problem persists. If so, you may have a deeper problem.

7/CD - TR
Troubleshooting and Repair

7/CD - TR - DD
Disc Drawer

Improperly Loaded Disc

If the problem is definitely in the CD player and not in the cables or stereo system, one possible cause is that the CD may be sitting incorrectly inside the disc tray, thereby not allowing any playback. The disc must be inserted with the label up, with the disc flat, and centered in the tray.

Usually if the disc is not placed properly on the drawer it will eject the tray until it is properly loaded. Other times an error message will be given. Especially on older players, or the least expensive ones, the indication will simply be that the disc doesn't play.

The disc drawer may become jammed from an improperly loaded disc. If this happens, carefully pull the drawer out by hand and replace the disc. (Usually the disc drawer will sense improper load and will not jam.)

It could be that the tray may have closed properly but the disc is not being grasped by the spindle. An easy check for this is pressing Play on the front panel. If the counter is advancing one can assume that there is no problem with the loading mechanism.

Loading Mechanisms

Inspect the loading mechanisms to see if they are working properly. With the cover off, insert a disc and load it. The disc should load, spin for a moment, and may then stop. Check for any broken gears (teeth on the gears may be missing causing a dead spot in the movement). Make sure the gear assembly is lubricated enough to allow free movement of the assembly.

Checklist

If the tray will not open, and there is no evidence of a foreign object in the way, check to see if IC301, the system processor, is getting signals from the Open/Close button S318. If not, S318 or the wiring between the switch and IC301 may be faulty.

See if the loading motor is receiving a signal from pin 12 of IC102 when the

button is pressed. If it is, suspect that the motor is bad. If not, there may be a problem between the motor and IC301 and IC102.

Check to see if a signal is present at pins 10 and 11 on IC102 each time the Open/Close button is pressed. The signals should invert between pins 10 and 11, high/low, low/high. Is there a correct inverted signal at pin 33 (open) and pin 34 (close) of IC301? If the signal does not invert suspect that IC301 is bad.

If the tray opens part way only, check the point where S02(LIDO) moves, as shown by a low to high change at pin 48 of IC301. Adjust S02 if necessary. If the tray opens and the motor does not stop, adjust S02.

If the tray closes part of the way only, check the point where the chuck (CHU) switch, S03, moves as indicated by a high to low change at pin 47 of IC301. Adjust S03 if necessary.

If the tray closes and the chuck drops, but the loading motor does not stop, readjust S03. Check the high to low change at pin 47 in IC301 which should be present when the disc is fully loaded.

Any problems that persist might indicate a bad IC301.

7/CD - TR
Troubleshooting and Repair

7/CD - TR - DM
Disc Motor

Hall Gain Balance

Figure 1 shows the disc motor adjustment. Connect one channel of the scope to DMCA and the other to DMCB. This allows simultaneous viewing of the A and B coils of the disc motor. Load a disc and press Play. Adjust the motor gain so the output levels at DMCA and DMCB are equal. The reading should be about 2 V peak-to-peak.

Sample and Hold Offset Adjustment

The adjustment for the sample and hold offset is shown in Figure 2, but it may not be available on all players. Do not confuse this circuit with the sample and hold circuit. This section is part of the pick-up servo, IC101, and controls the tracking error or TER signals.

For this test you need a test disc, as described in Section *"7/CD - TE."* Try several tests, each with a different number of stripes. Listen to the disc, as it plays. You should hear a ticking in the audio. Adjust the sample and hold adjustment for the minimum noise.

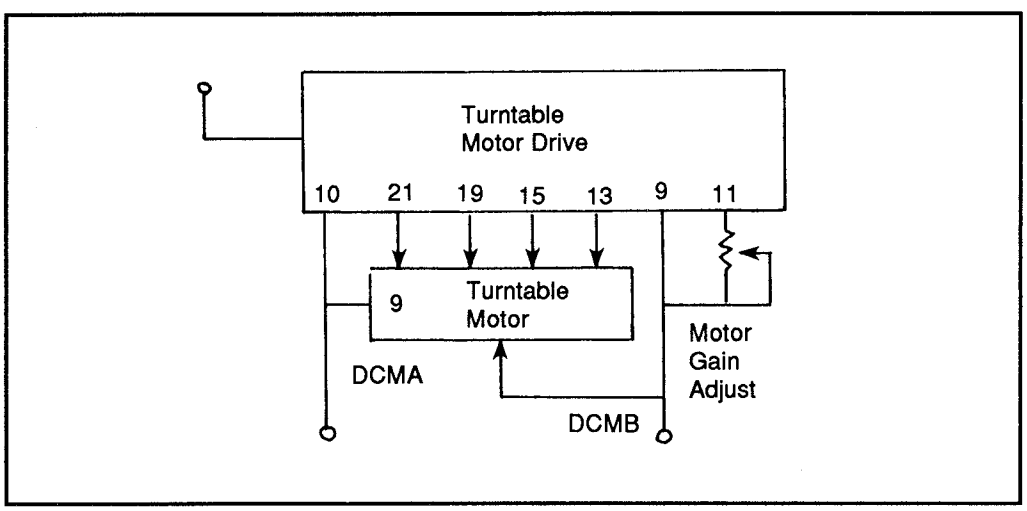

Figure 1: Disc motor adjustment

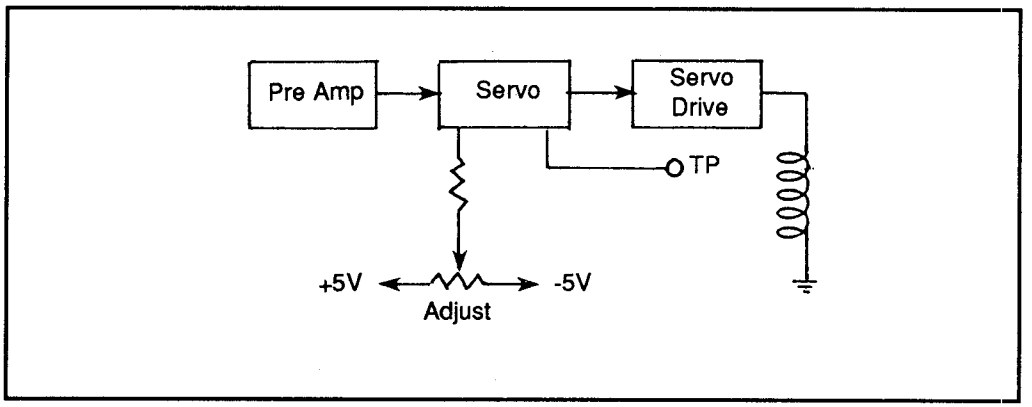

Figure 2: Sample and hold offset adjustment

A more accurate way is to connect the scope to TP13 of the preamp and look for the amount of audio dropout. You should be able to eliminate most or all of the dropout effect unless the pick-up servo is defective.

Disc Motor Revolves Incorrectly

Figure 3 shows a typical motor control circuit. This circuit is designed to keep the pick-up beam moving across the disc at a constant rate. The disc motor has a fine control signal administered to it called the radial tracking error or RT signal. The RT signal is applied through a low-pass filter, an analog switch, amplifier, and drive transistors and to the pick-up motor. The RT is only passed when a tracking switch (TSW) signal is sent from the microprocessor. A NOR gate inverts the TSW signal and applies it to mixing transistors which combine the TSW signal with the tracking error (TER) signal.

During a search operation the pick-up has to move at a faster rate than during normal play. This is done by the SLF and SLR pulses sent by the microprocessor. The SLF signal is applied through the SLF transistor to the motor driver, IC201. The SLR pulse is sent through the SLR transistor to the motor driver. Both the SLF and SLR pulses cause an increase in current in the drive transistors, which then increase the motor pick-up speed. The direction of the motor depends upon the polarity of the voltage that reaches the drive motor.

If the disc is not spinning, a total failure of the drive motor could be the problem. If this is the case, check for DMCA and DMCB drive signals to the motor windings.

It is more difficult to determine what is wrong when the disc does rotate. The disc rotates at a constantly changing speed, so you must rely on waveform measurements and adjustments to correct it. The first step to correcting a motor circuit is to perform the adjustments.

Before you dig into the disc motor thinking you've found the problem, consider the following: If the proper signals are not coming from the microprocessor, IC301, namely the DMSW, CLVH and ROT signals, the motor will not turn. These signals are then sent to the controller, IC402, before the turntable motor driver receives the motor signals.

If the CPU does not get a focus OK (FOK) and perhaps a tracking OK (TOK) from the focus and tracking circuits, the ROT, DMSW, and CLVH signals will be set the prevent the controller and motor driver from passing the PREF, PWR and PD signals to the motor. If all three signals remain high after pressing Play, check for FOK and TOK to the CPU. If one of the three signals is not normal, the CPU may be bad.

If your DMCA and DMCB drive signals are present, and the motor is turning but you are unable to set the output levels as listed, check all waveforms associated with the disc motor control section.

Begin at the controller and check for PWM, PREF and PD. If any of these are absent or abnormal, you can suspect the controller is bad. If not, track the signals between the motor and the driver. If the signals appear normal, check the waveforms and amplitudes as prescribed in the manual.

The focus control chip, IC601, receives the DSLC and the PREF signals from the signal processor, IC401 to create the EFM signals which are then returned

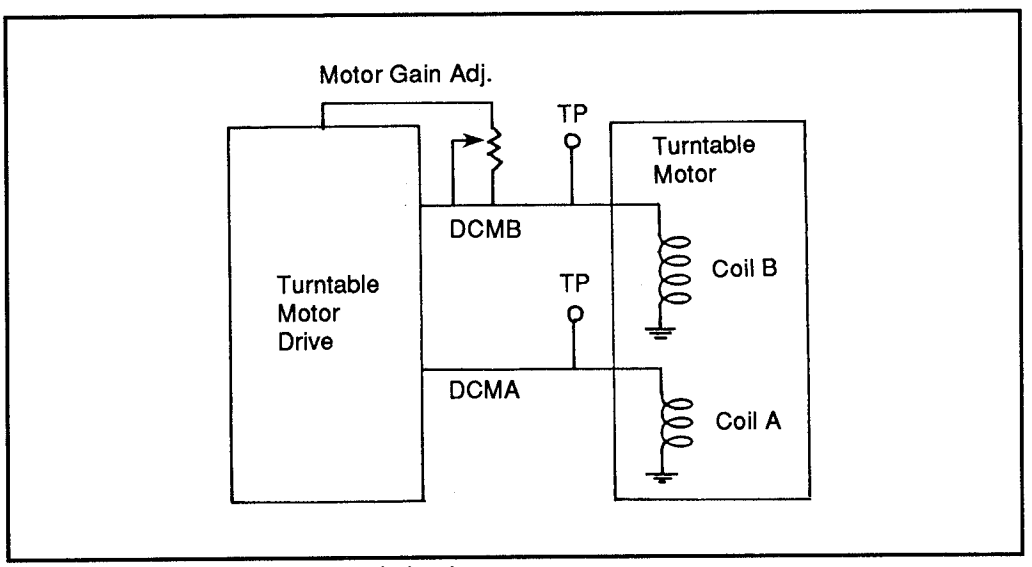

Figure 3: Typical motor control circuit

to the signal processor. If the EFM is not present, the signal processor, IC401 will not produce the PREF, PWM and PD signals. To check the EFM signals, check PSYNC, and ASYNC with a dual-trace scope. The signals should be synchronized and if either is missing or out of sync the problem lies in the signal processor.

The disc motor can be influenced by the signal processing circuit, so if a problem can't be fixed here, move to check the signal processing section.

7/CD - TR
Troubleshooting and Repair

7/CD - TR - L
Laser Adjustment

If any part of the laser assembly is determined to be bad, then the entire assembly will have to be replaced.

Laser Diode

The laser diode should not be adjusted unless the pickup has been replaced or troubleshooting has revealed a laser problem.

A typical laser diode can be damaged by surges in current. 150 mA is usually enough to damage a CD laser diode. Most players limit drive-current in the 40 to 70 mA range, with some as high as 100 mA.

Make sure the disc drawer is closed, or the chuck (CHU) switch is closed. If open, no power is applied to the laser. Check the laser diode by measuring the voltage across a resistor in series with the diode. You can then calculate the drive current as explained in the following paragraph.

If the recommended laser diode current is 30 to 60 mA, and the resistance used

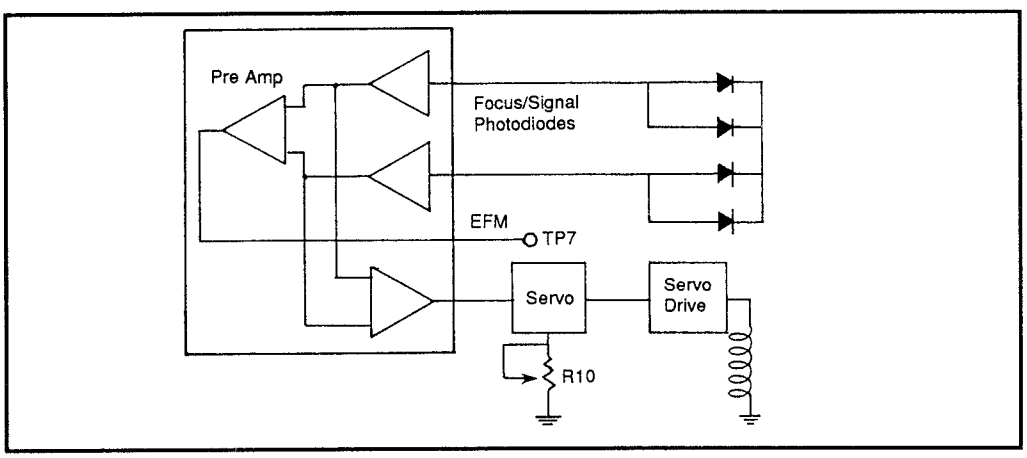

Figure 1: Oscilloscope connection to measure laser pick-up assembly's EFM signal

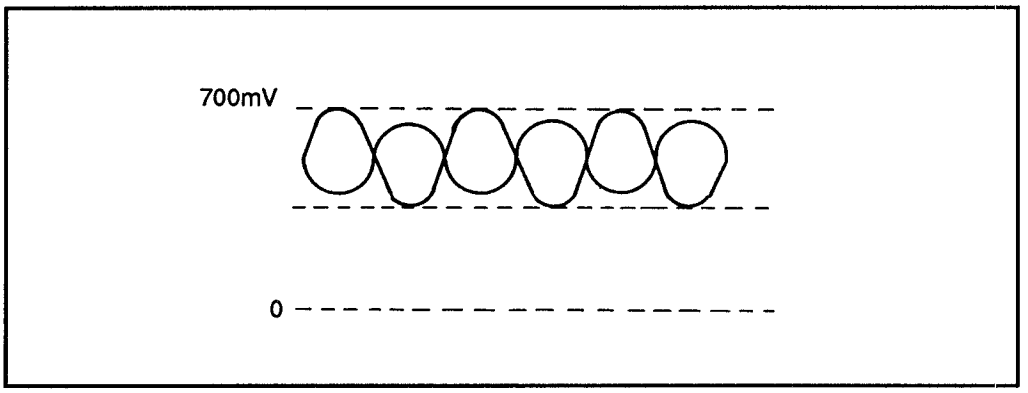

Figure 2: EFM waveform at laser pick-up test point

is 30 Ω, the voltage reading should be between 0.90 and 1.80 (30 mA • (1/30 Ω) = 0.90; 60 mA • (1/30 Ω) = 1.80). Check the voltage before and after any adjustments are made to the laser diode.

Before making an adjustment, set the control voltage resistor to minimum (refer to the service manual), and then increase the setting as required.

Connect your oscilloscope as shown in Figure 1. This allows you to measure the EFM signal. At this test point the EFM signal is applied to the tracking, focus, and pick-up motor servos and to the signal processing circuits.

Load a disc in the player and depress Play. You should see an EFM signal on the scope and it should produce a waveform similar to the one shown in Figure 2. Adjust the control voltage resistor until the EFM signal lever is 700 mV or as specified in the service manual (usually between 550 and 950 mV).

Pick-up Motor Offset

The pick-up motor offset adjustment sets the point where the pick-up accesses the start of a disc. The program information may not be read properly if the adjustment is not correct. This adjustment controls the motor servo and should not be confused with the inner-limit microswitch. It is fairly easy to set.

Connect your DMM as shown in Figure 3, so you may monitor the motor gain output. Load a disc in the unit and depress Play. While the disc is playing, ground pin 11 of the motor driver, IC201, as shown, simulating a low TSW signal. (When TSW is high, the system shuts down.) Depress Stop after about 10 seconds and measure the DC level at TP99 and adjust R201 in very small increments so the voltage reading is 0 V (± 50 mV). The voltage may not stabilize very quickly.

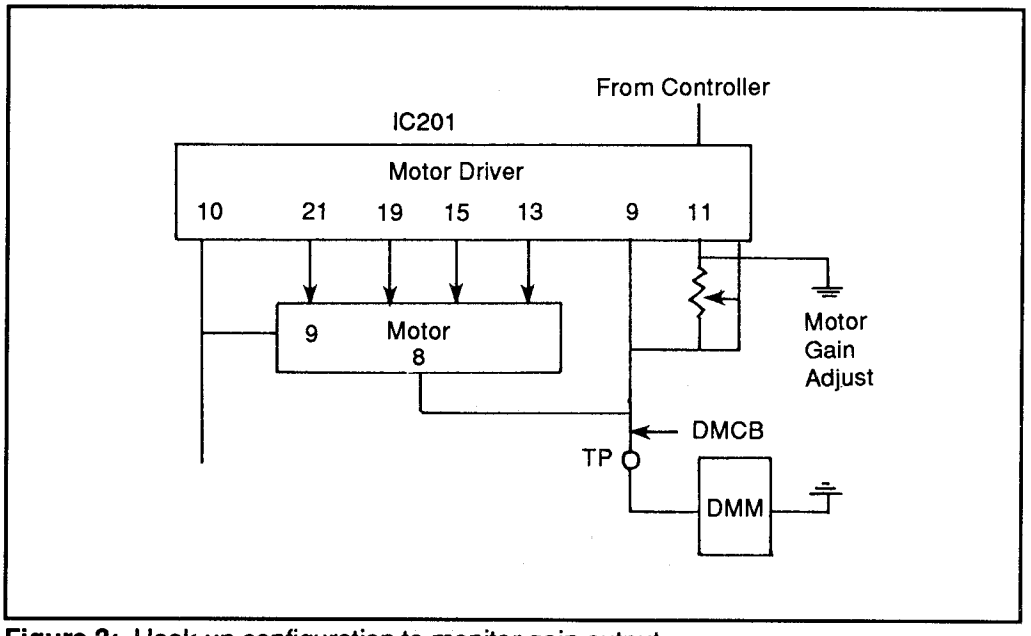

Figure 3: Hook-up configuration to monitor gain output

Tracking Servo Offset

Figure 4 shows the tracking servo offset adjustment diagram. The optical pick-up is adjusted here through the servo and tracking actuator coil so that the laser beam is centered properly on the tracks. This produces a proper EFM signal.

Connect an oscilloscope to TP13. The servo offset adjustment will offset the two tracking diodes, but not the four focus/signal diodes.

Load a disc in the player and depress Play. Adjust the servo offset until the EFM is at maximum amplitude. This will indicate that the EFM is at maximum amplitude. Some players may be unforgiving at this point and act erratically after this adjustment. Press Stop and then Play again and the problem should be fixed.

Focus Circuit

This adjustment changes the optical pickup through the servo and focus actuator coils so the laser is properly focused on the tracks. Connect the oscilloscope to TP13 as shown in Figure 5. Load a disc as before and depress Play. An EFM waveform should appear on the scope screen. Adjust R115 for the maximum EFM signal. You may have to stop and restart the disc after this adjustment.

Laser Diode Circuits

If symptoms arise that cannot be explained, suspect the laser circuits. If the laser appears to be nonoperative, check if +5 V is getting to the chuck switch. When the chuck is open, +5 V are sent to pin 47 of the CPU, IC301, which shows a tray

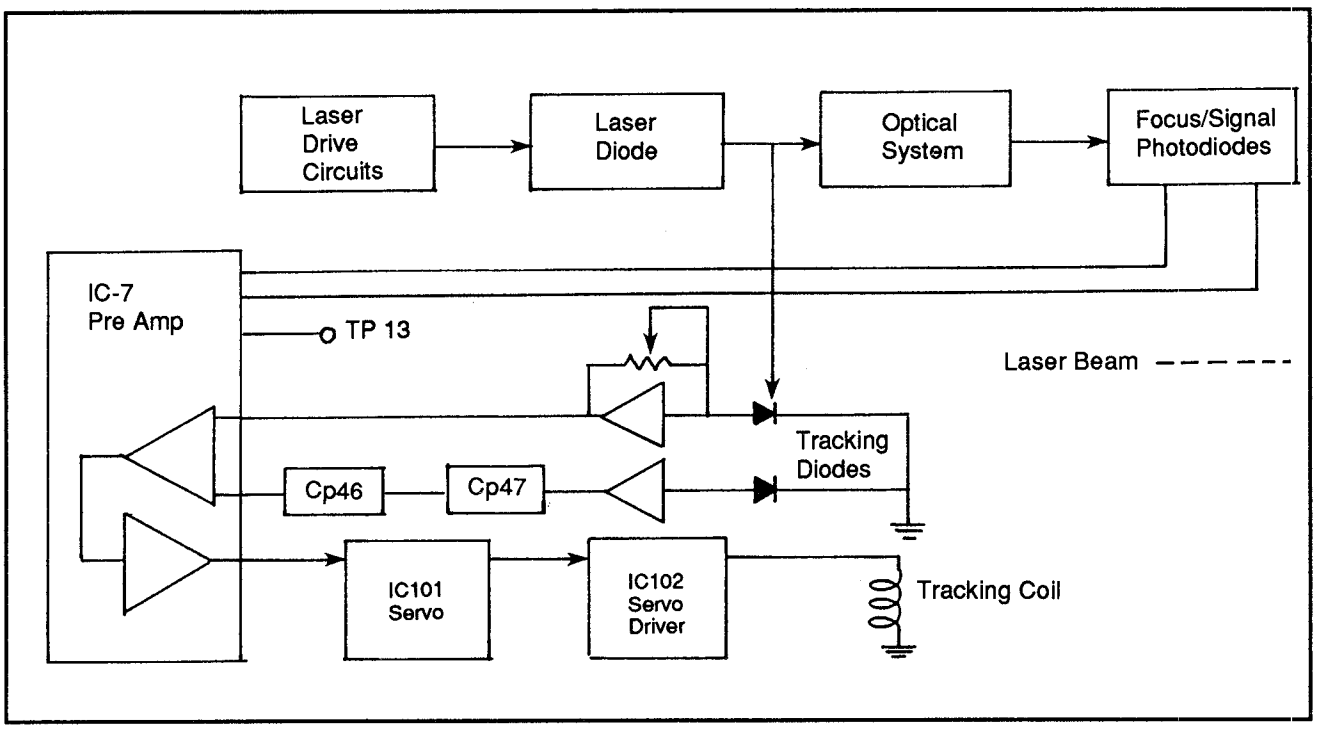

Figure 4: Tracking servo offset adjustment

open status or that the clamp is not dropped. The CPU will be disabled in several sections when this happens. When the clamp is fully dropped, the chuck switch closes and the laser diode receives power from the laser transistor.

If the laser diode has power, look for a low signal at pin 51 of the CPU, test point 14. If that signal is not present suspect the CPU. If present, check for a signal at the laser controller, IC604, from the monitoring diode. If none is found the monitoring diode and/or laser adjustment may be bad.

If the laser controller has signals present at pins 5 and 6, look for a drive signal at pin 7 of the laser controller and the base of the laser transistor. If not present, suspect the laser controller. If present, suspect the laser transistor.

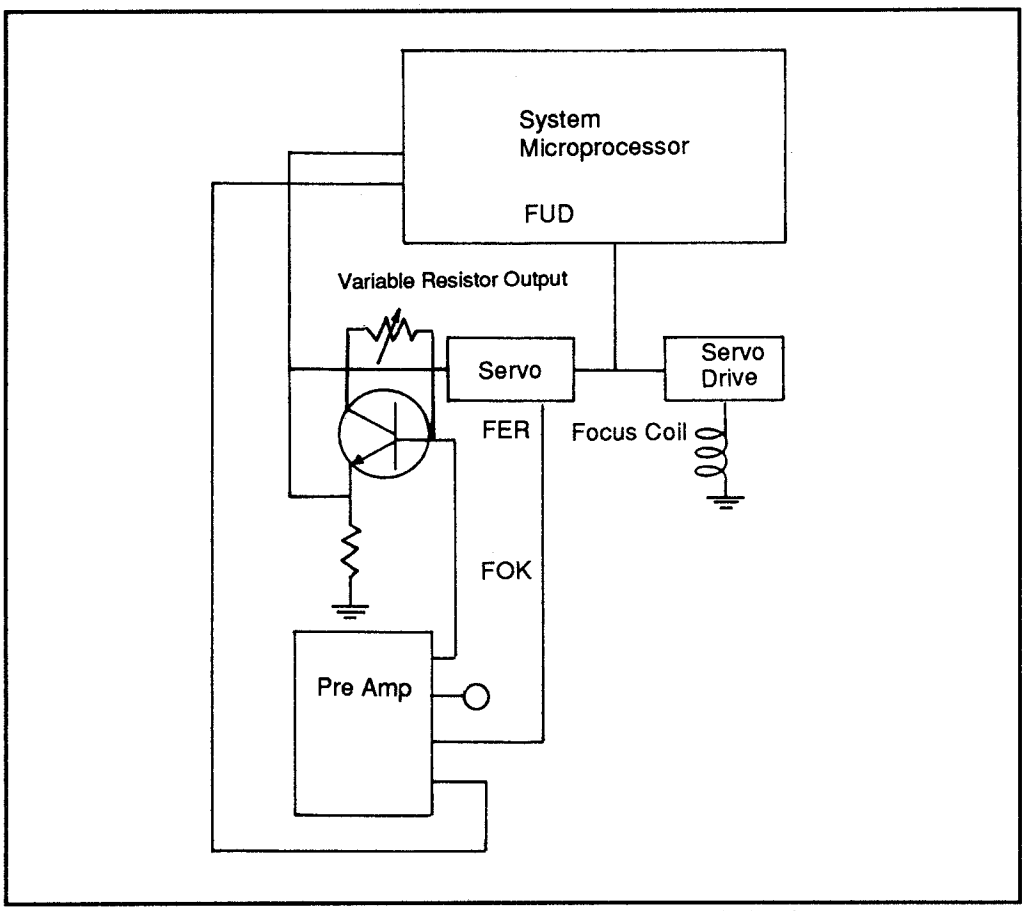

Figure 5: Hook-up configuration to monitor the focus control circuit

7/CD - TR
Troubleshooting and Repair

7/CD - TR - PM
Pick-up Movement

No Pick-up Movement

When the pick-up first receives power it moves to the inner-most track. The CPU, IC301, applies a temporary reverse (SLR) signal to the pickup servo IC101. A reset signal is created by a combination of three transistors and applied to pin 24 of the CPU. There is a temporary SLR signal sent to the motor through the pick-up servo, the laser controller and servo driver, (IC102) which cause the pickup to move inward until the inner-limit S01 is moved.

If the pick-up does not seem to move when the power is applied, check for SLR at pin 60 of the CPU. If none is found you can suspect that the CPU or reset circuit are bad. If SLR is present, but the motor does not run, suspect the pick-up servo, the laser controller, the servo driver and/or the motor as well.

Pick-up Does Not Focus Properly

When play begins, the CPU sends the focus up down (FUD) signal to the pick-up servo and the servo driver, which moves the focus actuator coil. Once okayed, a focus-ok (FOK) signal is created by the focus controller, IC601, and applied to the pick-up servo and the CPU. If the CPU does not receive the FOK signal after a few tries it stops the system.

After focusing, the focus error (FER) signal from IC601 is applied to the actuator through the pick-up servo and the servo driver. It keeps the pick-up focused on the disc. When a problem is suspected in the automatic focus (AF), install a disc, press Play, and check to see that the pick-up moves up and down a few times and then stops. If this does not happen, check the laser and adjust if necessary.

To measure the resistance of a focus and tracking coil, use your DMM. The resistance of the focus coil will be around 20 Ω, and the resistance of the tracking coil will be 4 Ω. If you read a short or open circuit you may have to replace the actuator.

If the FUD pulses are not present after selecting Play, you can suspect the CPU. At pin 50 of the CPU, pins 35 and 36 of the pick-up servo, and pins 6 and 7 of the servo driver. Also check for FOK signals at pin 34 of the pcik-up servo, pin

13 of the CPU, and pin 8 of the focus controller. The LASW signal must be applied to pin 9 of IC601 for the FOK signal to be generated.

Check for the FER signals at pins 6 and 7 of the focus controller. If present at pin 6 but not at 7, suspect the servo driver. Suspect the focus controller if the FER signals are not present.

If the focus/signal photodiodes are suspected as being bad, check the EFM signal at test point 13. If you receive a good EFM signal, all photodiodes are good.

Pick-up Is Not Tracking Properly

Try fixing tracking problems first as mentioned in the Section *"7/CD - TR - L"*. Tracking can be caused by a variety of problems.

If the tracking error (TER) signal is not present, the pickup motor and the radial tracking coil will have no control signal. Also, if there is no FOK signal at the pick-up servo the TER will not be passed to the tracking actuator.

Next, check the tracking actuator coil. Then check to see if the pickup unit actually moves to the inner limit when power is first applied. This should tell you that the pickup motor, servo and reset circuits are good.

If you have a good motor and coil and can't seem to correct the problem with adjustments. Trace the TER from its source to the pickup motor and the tracking actuator coil. If TER does not reach the servo driver, the pick-up servo may be the problem. But the pick-up servo must receive several signals before it will pass the TER signal. Some of the signals that need to be present are the FOK and TSW signals. The TER signal is also being checked for errors by the pick-up servo. The pick-up servo should be checked for proper signals and voltages via the service manual.

7/CD - TR
Troubleshooting and Repair

7/CD - TR - SP/AC
Signal Processing/Audio Circuits

Signal Processing Circuit

Malfunctions of the signal processing circuit can cause a variety of problems in the disc motor and the audio circuits. While it is difficult to determine errors in the signal processing circuit, there are some tests that can narrow down the source of difficulty.

Begin by checking for audio at output pin 17 of the D/A converter, IC403. You should see the left and right channel low-level audio. If a signal is not found, the rpoblem may be in the signal processing section.

If the front panel appears to be normal, and there is an excessive amount of audio dropout, the problem could again be with the signal processing circuits.

Check all of the waveforms associated with the signal processing section as prescribed in the manufacturer's service manual.

The 4.3218 MHz signal should be present at TP2, the MCK of the signal-processing module. If that signal is missing, perhaps the clock, IC401, or the signal processing circuit are faulty. Check PSYNC and ASYNC for 7.35 kHz signals. The PSYNC signal will be present in both Stop and Play but the ASYNC will only be present during Play.

The focus controller, IC601, must be receiving the PREF and DSLC signals. They are returned to the signal processing section as square wave EFM signals. If the EFM signals are not present, check to see if the high EFM signals are present at pin 20 of the focus controller.

Between the CPU, IC 301, and the signal processing section should be all related signals like ROT, CLVH, etc. Check each line with a scope for the presence of these signals. If one or more signals are missing, the CPU can be suspected of being faulty. The microprocessor and the signal processor are dependent on each other, so one may cause the other to have improper signals. Check the TC1 and TC2 signals. These signals indicate the accuracy of the decoding processes inside

the signal processing module. They should produce a 7.35 kHz signal during Stop and up to a 200 Hz signal during Play. If not, suspect the signal processing section. Next, check for the accuracy of the sync signals and detection functions in the signal processing section at BFR and EFR. BFR should be zero during playback but not when there is a groove skip. EFR may have a signal present, but this should be below 50 Hz.

Audio Circuit

Begin by monitoring the output of pin 17 of the D/A converter, IC406. Next, check to see if the SHR and SHL, the sample and hold signals, are present from the signal processing module. If audio is present at the D/A converter and the SHR/SHL signals are present, trace the signal to the output jacks. Look for any emphasis or muting signals from the CPU and/or the signal processing section.

7/CD - VCS
Various Case Studies

7/CD - VCS - SoD5
Sony D-5

Solving a Shutoff Problem in a Portable CD Player

This case study describes a repair in which the customer inadvertently damaged his Sony D-5 Discman. When the Discman arrived in the shop, it showed obvious signs of abuse. The unit was dirty and had a dent on top. The customer claimed that while playing the Discman one day, it stopped in the middle of a song. Hoping to solve the problem himself, he pushed the laser towards the center of the unit with his finger. He later realized that a dead battery caused the problem. Thereafter, the Discman responded by turning on for a few seconds and then shutting off, as if no CD were inserted.

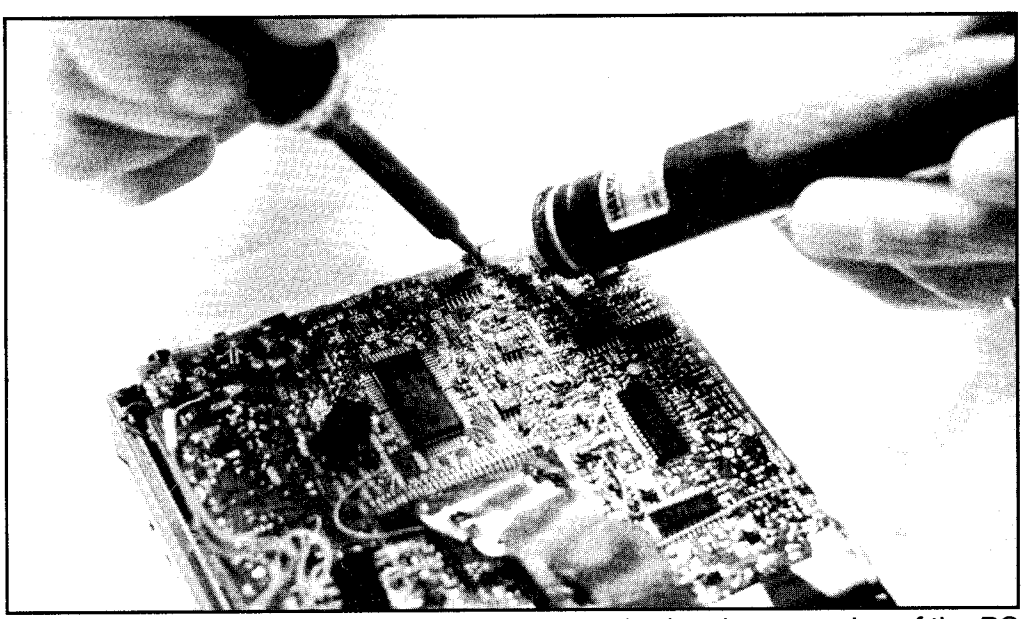

Figure 1: Desoldering the mylar connector attached to the rear edge of the PC board.

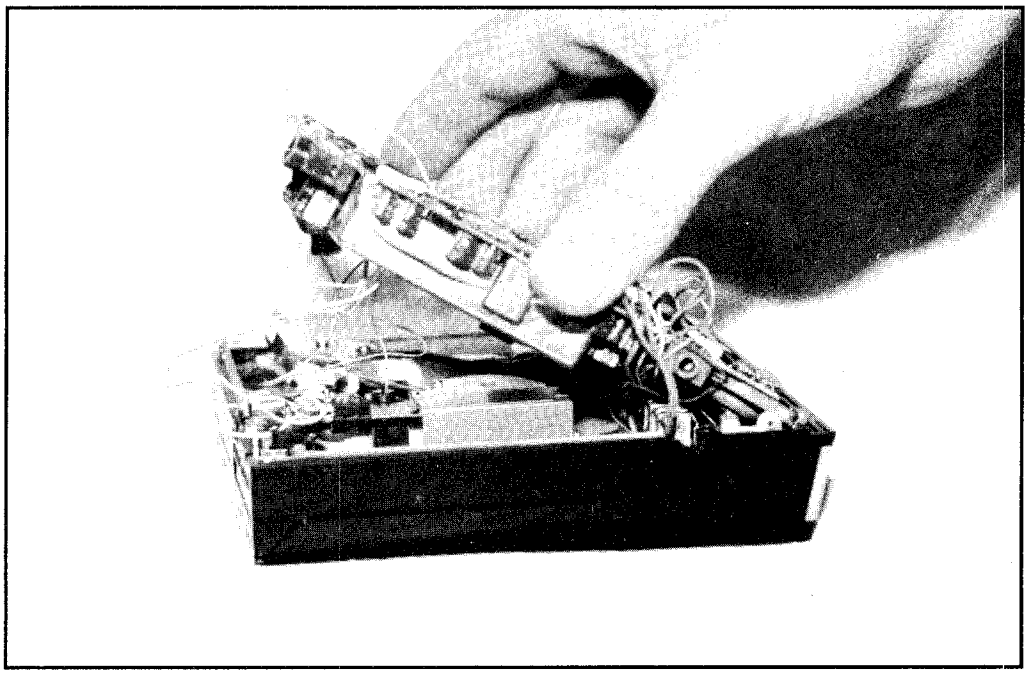

Figure 2: Carefully raising the main PC board

Repair Procedure

From the customer's scenario, it was natural to assume that some damage had occurred to the lens and possibly the accompanying mechanism. To verify the customer's complaints, we applied power to the unit, attached headphones to the appropriate jack, inserted a CD, and listened. The CD began to spin and the laser illuminated (we could tell this from the high pitched noise it produced). As described by the customer, any attempt to read the CD resulted in shut-down. It was obvious that the laser was not moving from track to track.

Remove Bottom Panel

We removed four screws located on the bottom panel and lifted it away. With the panel removed, we looked for any broken wires or burnt components. Nothing appeared to be charred or physically defective.

Desolder Mylar Connector

We gently peeled back a piece of black tape that was holding down the wires that connected the PC board to the servo and laser. This gave us some slack. We then carefully desoldered a mylar connector attached to the rear edge of the PC board via four solder pads (see Figure 1). You need to be extra careful when handling these connectors. You should use a low wattage soldering iron and avoid bending

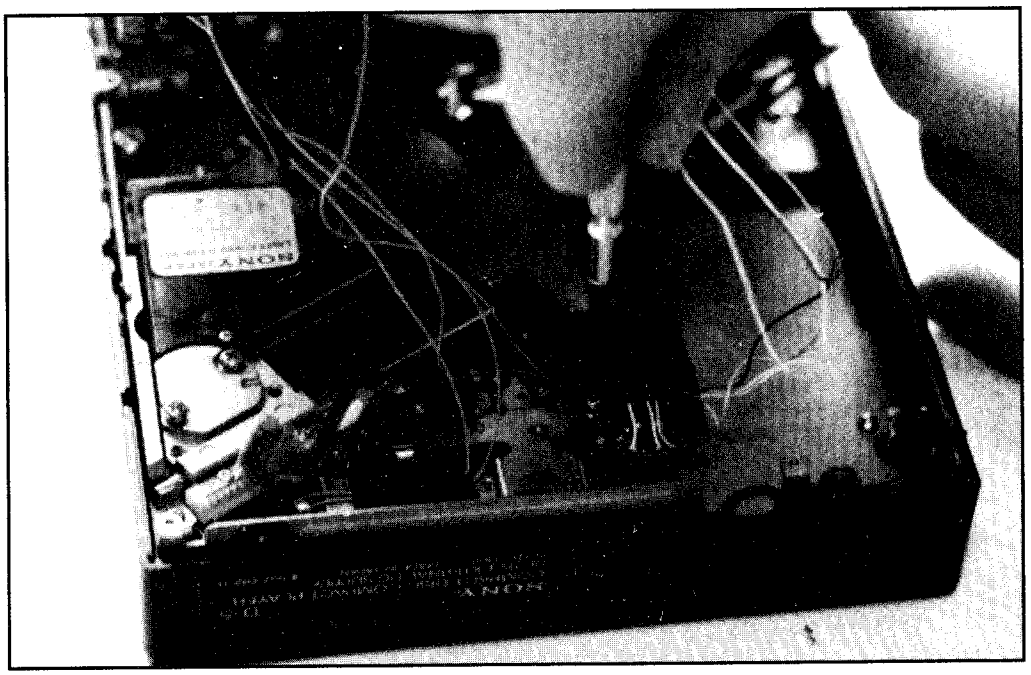

Figure 3: Removing a screw securing the stepper motor assembly to the chassis

or pulling, as the mylar damages very easily. Since this connector goes to the optical block, we also made sure that the soldering iron was grounded. This avoids building up a static charge, which can destroy a laser diode. For this reason, too, it is smart to keep your fingers off the exposed end of the connector.

Missing Teeth

We now removed the five screws that secure the PC board to the chassis and slowly lifted the board from the back end (see Figure 2). We inspected the exposed gears on the drive block for damage and looked for anything that might impede the lens from traveling along its path. Close inspection showed that the gear that meshes with the laser block had a few teeth missing, probably due to careless handling by the owner.

Inspect Stepper Assembly

At this point, we removed two small screws and carefully lifted out the stepper motor assembly (see Figure 3). We inspected all gears and the optical block for damage. As far as we could tell, only the one gear was damaged — everything else looked fine.

To get to the damaged gear, we first needed to remove the uppermost large gear. This we did by using a small screwdriver to pry off the metal hold-down. We had

The Sony D-5 Discman as it arrived in the shop.	
Removing the bottom cover of the Discman.	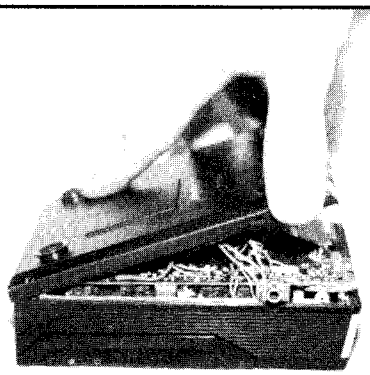
Removing a screw that secures the PC board to the case.	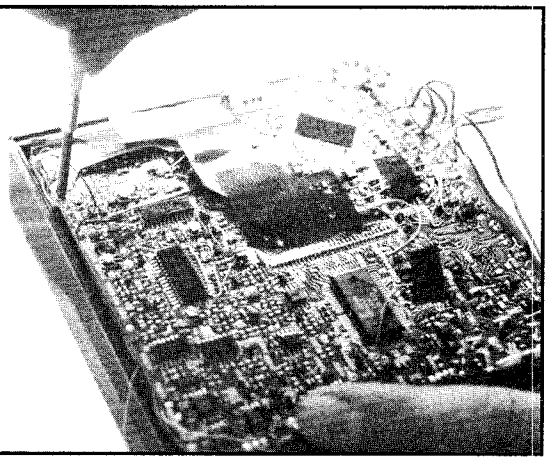

Removing the stepper motor assembly from the unit.	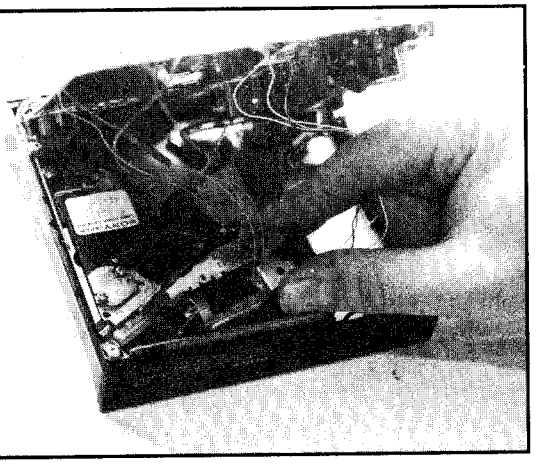
Changing the defective gear.	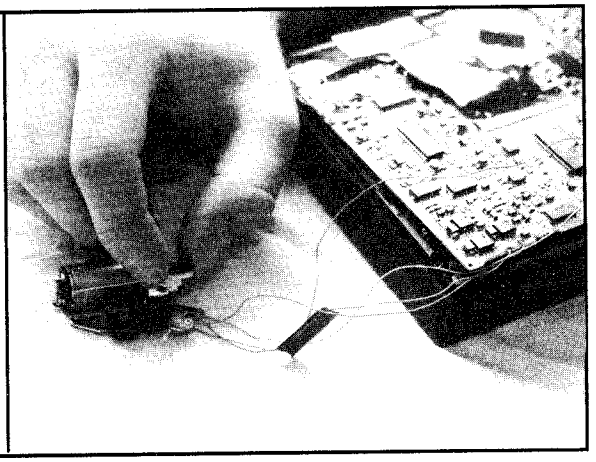
A view of the stepper motor assembly after the gear has been replaced.	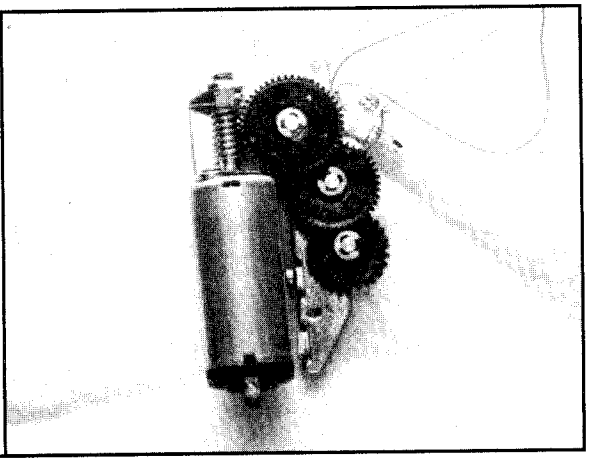

to be careful to keep the white gear underneath attached (via the spring) and oriented properly. We removed each set of gears until we reached the defective one. This we removed, too (see Figure 4), and replaced it with an equivalent gear. Note that this part was not available from the manufacturer. When contacted, Sony stated that only the complete servo assembly could be ordered, not a small gear. As a result, we matched up an equivalent from an old cassette deck in our junk box.

Test Unit

We reinstalled everything in reverse order, but stopped after replacing the PC board. We tested the unit with a CD. The Discman now seemed to work perfectly, all tracks were accessible and the player responded well to vibrations.

Preventive Maintenance

We secured the PC board and rear cover. For preventive maintenance purposes, we cleaned the optical lens. The best method is to wipe the lens with a lint-free cotton cloth (cleaning paper for camera lenses is ideal), soaked in alcohol or ether. Be careful not to push too hard or you might damage the supporting spring or lens assembly. Blow excessive dust away with a can of air, available at any camera store.

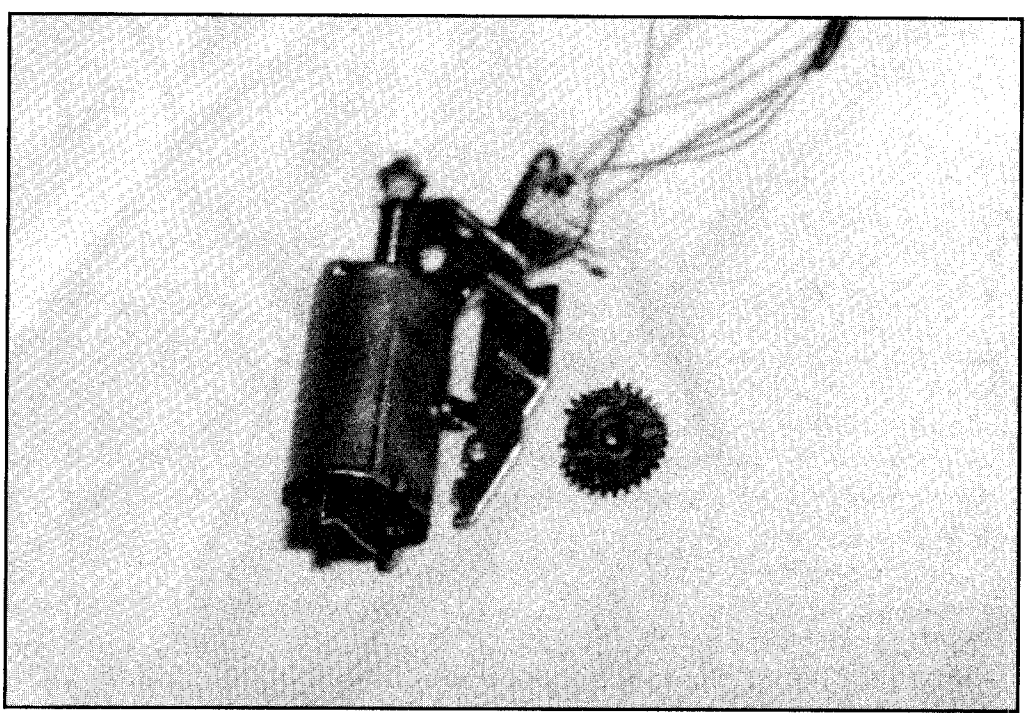

Figure 4: Closeup of the defective gear

Conclusion

Although seemingly simple, this repair can be a nightmare to an impatient repair person. Holding the PC board up while removing or installing the drive assembly can be a real nuisance. Using too much pressure might snap a wire or tear a mylar connector.

Whenever dealing with CD players, be sure to work in a static free environment. Ground all test equipment and the workbench. As stated earlier, avoid touching the laser diode contacts with your fingers or any ungrounded tool. Also, keep all magnets away from the assembly since some optical pickups contain internal magnets and can be destroyed. — *Dana DeMeo*

Problem: Portable CD shuts off after a few seconds.

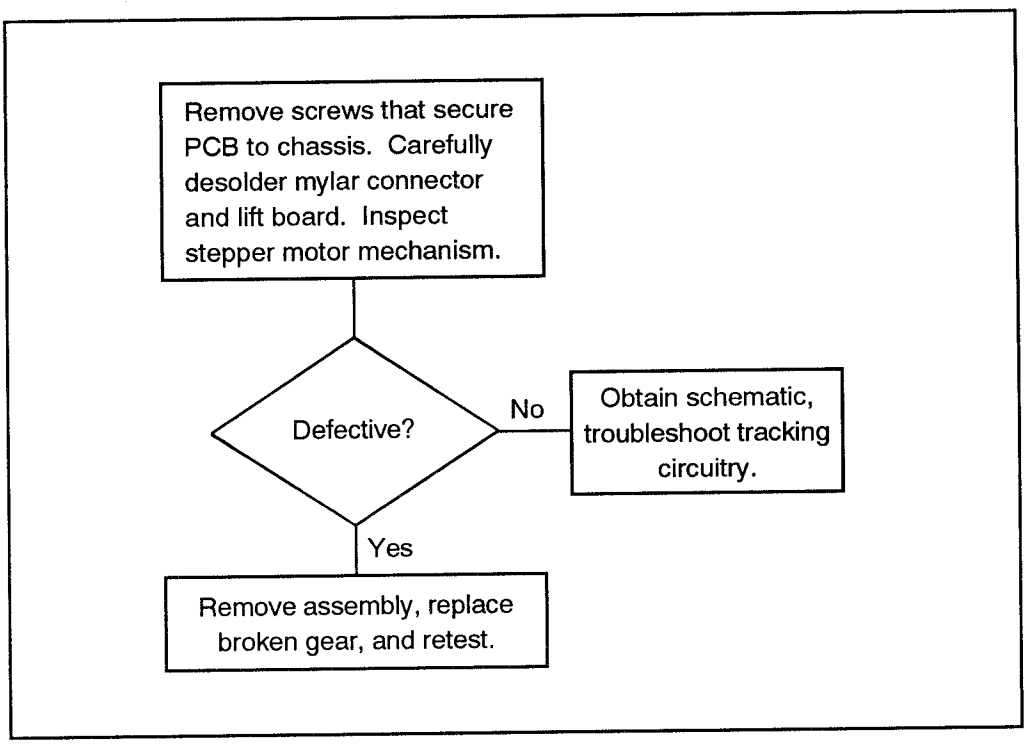

7/R - F
Features

7/R - F - A
Antenna

AM Antenna System

A compact AM antenna usually consists of a paper-wrapped ferrite core with a coil of wire winding around the paper wrap. By moving the winding across the ferrite core, adjustment for the best possible signal reception is possible. Figure 1 shows a typical antenna for an AM radio receiver.

Testing and Alignment

To test and align the AM antenna, free the antenna winding so it can move along the ferrite core. A cement solvent may be needed for cemented windings; or you may have to break the wax seal by loosening it with your fingers.

Tune the receiver to the low end of the dial or to any weak station near 600 kHz. Slide the antenna winding back and forth to receive the best possible signal. Next, tune the receiver to the high end of the dial for a weak station around 15 kHz. Adjust the antenna trimmer capacitor for the maximum volume.

Continue this until the best possible signal is obtained on both the low and high ends. It may seem like nothing is happening, but even a slight movement will cause the reception of a weak station to change.

Another method for measuring the performance of an antenna is to use a dip meter. The dip meter should be able to tune the same range (or greater) as that of the receiver.

The dip meter is connected to the receiver antenna (usually magnetically). Tune the receiver to the low end of its dial. Tune the dip meter to the same frequency and see if the meter dips. If you are getting a good strong dip, the antenna is operating properly at this frequency. Check several frequencies to see if they are operating correctly. A good dip at each frequency indicates good antenna areas. If not, check the antenna connections, lead-in and other components in the antenna system.

FM Antenna System

The antenna system consists of the antenna, antenna amplifier (if used), and down-lead coaxial cable (if used). An easy check of these devices is to hook a

known good FM receiver to the antenna. Replacing the cable between the receiver and the antenna (or antenna amplifier) can determine a bad antenna or a bad cable. Bypassing the antenna amplifier can determine if the problem is in the antenna amplifier or the antenna itself.

Antenna

The primary function of the antenna is to collect the FM signals. Any bent or broken elements can change the ability of the antenna to collect a signal and to resonate at the right frequency. A higher antenna must be aimed more accurately because the antenna will reject signals that are not within the antenna pick-up path. The antenna connection may also be damaged or corroded to the point of not allowing proper contact with the connecting cable or amplifier.

Antenna Amplifier

The antenna amplifier, increases the signal before it reaches the tuner, thereby reducing the possibility of any additional noise being introduced on the way there. The connections must be clean and good. Also, the amplifier will be powered. Make sure the power is present before fixing a suspected bad amplifier. The amplifier is a broadband amplifier. This means it amplifies the entire FM range covered rather than just one specific frequency.

Tip ☞

TV antennas cannot always be used as FM antenna. Some TV antennas use an FM trap that rejects FM signals.

Antenna Cable

The downlead cable generates noise and signal losses. Cracks and sharp bends can change the cable parameters,especially if the downlead is of the 300 Ω twinlead type.

Sharp bends can cause the impedance in the cable to change. Poor impedance matching is a sure sign of problems. Hooking a 75 Ω cable to a 300 Ω system without the proper impedance match should be avoided.

7/R - F
Features

7/R - F - M
Modulation

Amplitude Modulation

The first radios were amplitude modulation (AM) tuners. These tuners cover the 540 to 1600 kHz spectrum and are usually of the superheterodyne type. As described above, a superheterodyne receiver is one in which the desired signal mixes with a locally generated signal to produce an intermediate-frequency (IF) signal. This IF signal is then detected to create the audio frequency.

Amplitude modulation is the process of changing the amplitude of an RF carrier. An unmodulated signal of an AM signal is at a constant frequency and amplitude, whereas a modulated frequency signal is varied.

In AM, the music or speech is used to modulate the carrier. The intelligence to be transmitted varies some property of the carrier. By superimposing the intelligence on the carrier by varying the amplitude of the carrier, amplitude modulation is created.

Frequency Modulation

Frequency modulation tuners occur in the VHF (very high frequency) region of the spectrum. For radio this FM bandwidth is from 88 MHz to 108 MHz. FM transmissions require a line of sight to be received and generally have a range of 15 to 65 miles. (Line-of-sight AM doesn't carry as far. However, AM signals can bounce off the ionosphere back to earth back to the ionosphere and can thus travel great distances.)

Frequency modulation (FM) is the process by which the frequency of a signal varies from a set center frequency while the amplitude of the frequency remains constant.

FM receivers also use the superheterodyne principle. Both FM and AM use the same basic types of circuits, with FM having a ratio detector that rejects any amplitude differences on an incoming signal.

7/R - F Features
7/R - F - M Modulation

7/R - F - T
Tuners

7/R - F - T - AMT
AM Tuners

Introduction

AM radios have an RF preamplifier to reduce image interference, a first detector and oscillator to convert the signal to a lower frequency where the RF amplification is better. At this point there is a second detector to remove the sound signal from the carrier signal and an audio amplifier and output system to set the signal at a level sufficient to drive a basic audio amplifier.

AM Wave

An AM wave is composed of various frequencies which make up the sideband frequencies. These frequencies are: the radio frequency of the carrier wave, the modulating audio frequency or frequencies, and combinations of these frequencies.

When two frequencies are combined, two new frequencies are created. One frequency is the sum of the two, and the other is the difference between them. For example, a modulated frequency of 5000 Hz (5 kHz) and a carrier of 5000 kHz would produce sidebands of 4995 and 5005 kHz.

Bandwidth

When a RF carrier is modulated by many audio frequencies, like music or speech, the side frequencies consist of a band of many frequencies above and below the carrier frequency. The width of this band of frequencies is determined by the highest modulating frequency. To be reconstructed, Hi-Fi AM signals must have an available bandwidth equal to twice the highest frequency.

Figure 1 shows the block diagram of a simple superheterodyne AM receiver.This circuit creates the IF signal used to generate the audio frequency.

The RF amplifier stage receives the weak signal picked up by the antenna, amplifies it and then passes it to the mixer. The mixer then heterodynes the signal with the internal oscillator and outputs an IF signal. The IF amplifier (there may be more than one) then amplifies this signal and applies the signal to the second detector. This stage then removes the IF component from the signal and sends the undistorted audio signal to the circuits for processing. They are then sent to

the speaker. These circuits may include preamplifiers, amplifiers, equalizers or any other audio processing circuits.

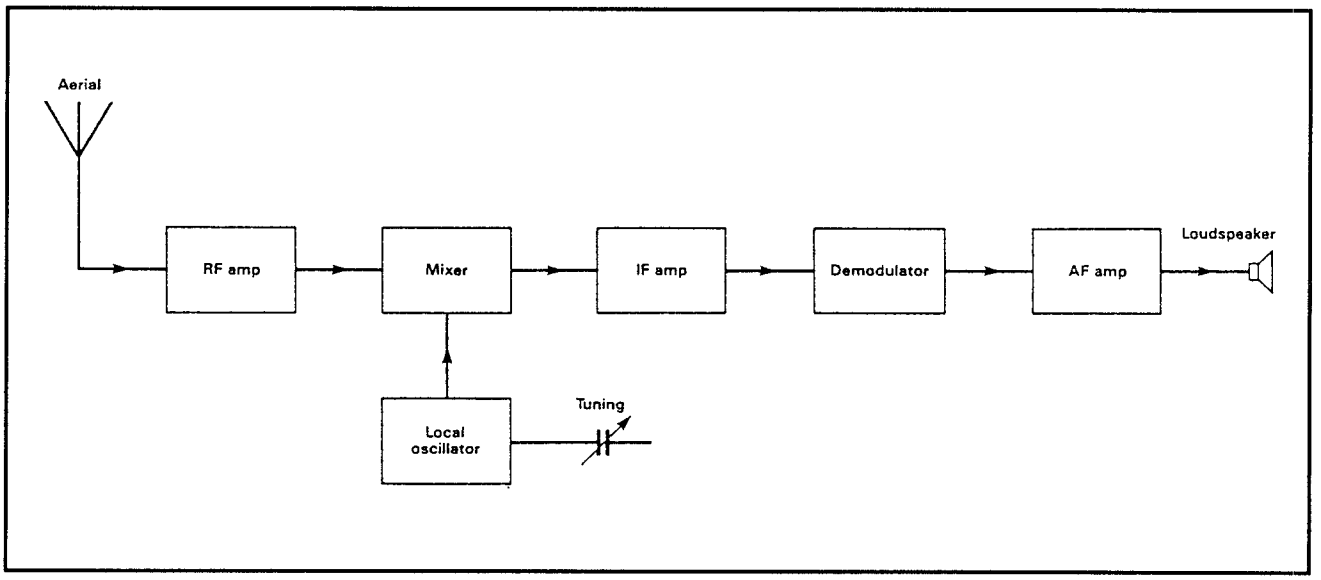

Figure 1: Block diagram of a superheterodyne AM receiver

Frequency Conversion

The converter stage is composed of the mixer and the local oscillator. The converter creates the IF signal which has the same modulation characteristics as the received signal. An unmodulated RF signal is created in the receiver and is heterodyned (mixed with or beat against) with the incoming RF signal. The IF is created, which is a frequency that is equal to the difference between the locally generated and incoming signal frequencies.

Figure 2 shows a typical converter made from transistor-type circuits. The RF input is coupled to the mixer tuned circuit by means of a coupling coil. This circuit is tuned to the frequency of the incoming signal and is applied to the mixer base.

Oscillator

The oscillator operates at a frequency equal to the incoming signal plus the intermediate frequency. The output from the oscillator is coupled to the mixer base through a capacitor. The signal then applied to the mixer is the product of the incoming frequency and the oscillator frequency.

This combined signal then appears at the mixer output. This output is then applied to the IF amplifier.

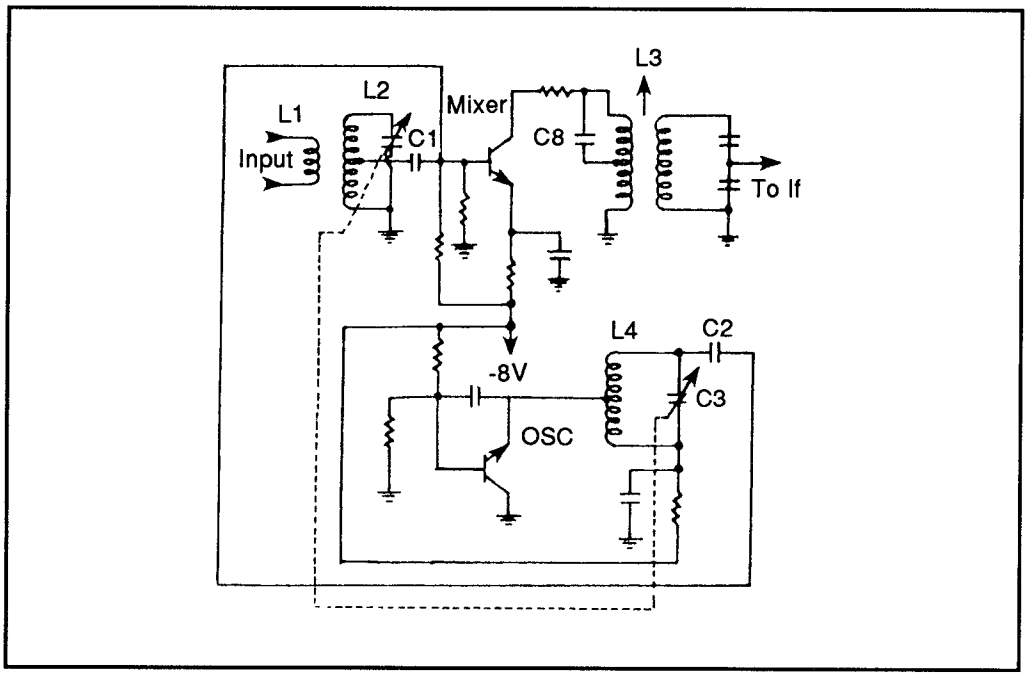

Figure 2: Converter with separate mixer and oscillator

IF Amplifier

The IF amplifier creates most of the amplification found in a superheterodyne circuit. It is located in a metal box in most modern radios. There may be anywhere from one to three IF amplifier stages used. Figure 3 shows a typical IF amplifier.

The input and output circuits are inductively coupled by the use of two IF transformers. The primaries and secondaries of the transformers are tuned. The incoming IF signal is always heterodyned to the same intermediate frequency (typically either 455 kHz or 10.7 MHz). Therefore, the four tuned circuits operate at the same frequency at all times. Variable capacitors control the proper frequency adjustment of the IF transformers, which are mounted in small metal cans.

There is a high gain in IF amplifiers, so the coupling between the input and output must be kept to a minimum. This is accomplished by careful shielding and placement of parts and by providing suitable decoupling networks. A decoupler network is usually a resistor and capacitor connection.

Second Detector

The purpose of the second detector is to remove the IF component from the signal. It then outputs the audio that was impressed on the carrier at the transmitter.

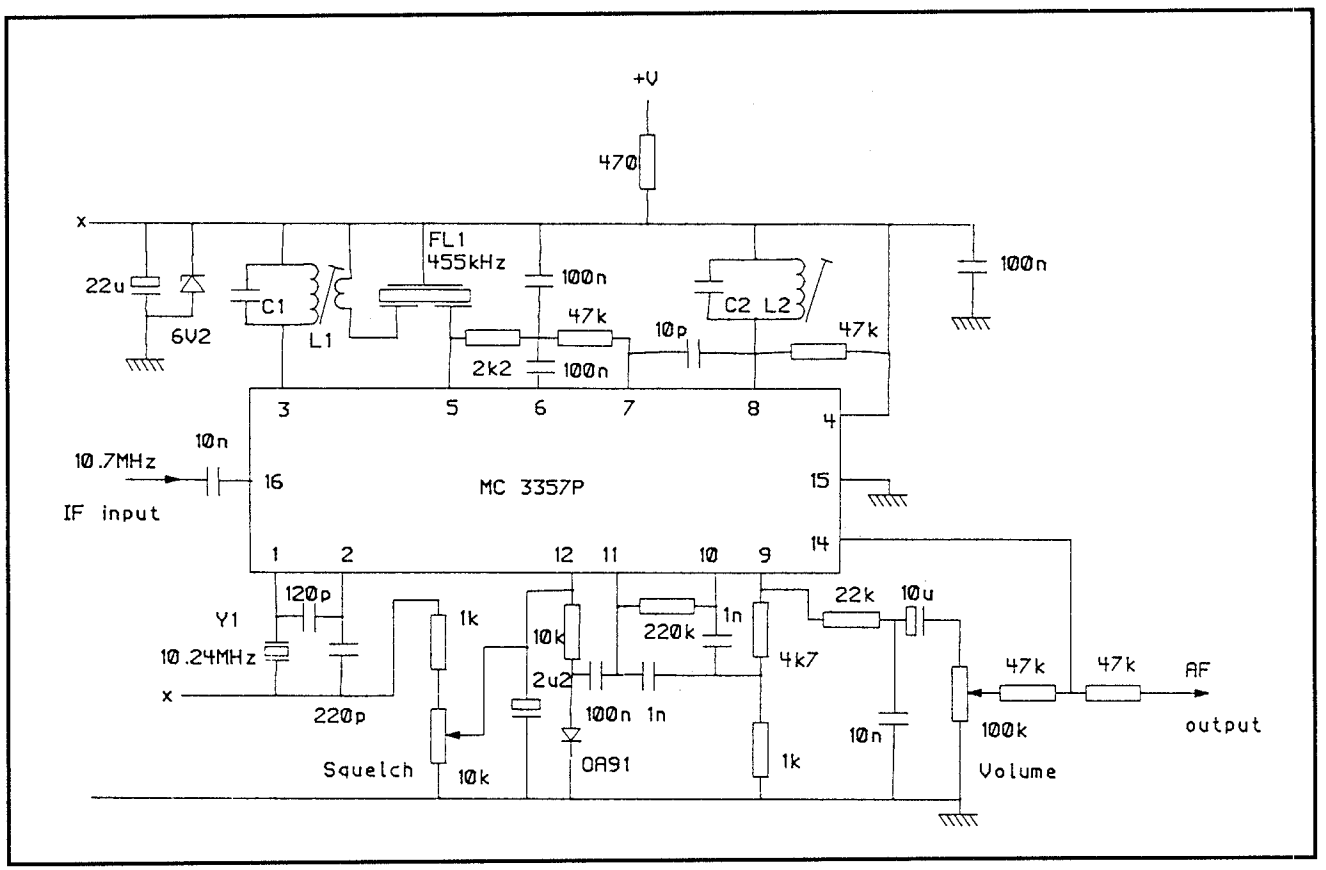

Figure 3: IC based IF amplifier circuit

The diode detector is used in lower cost receivers because it is simple and effective.

The emitter follower has a low-impedance output, allows the use of longer lines to feed the amplifier unit, has a simple impedance-matching arrangement, and less feedback.

Many of the current radio receivers use some kind of IC detector circuit. The detector circuit is designed to eliminate alternate half-cycles of the waveform and to detect the peaks of the remaining half-cycles to create the output voltage. The diode detector is basically a half-wave rectifier. When the signal on the anode swings positive, the diode conducts, and rectified current is sent to the capacitor and load resistor. The voltage varies across the capacitor in agreement with the rectified amplitude of the carrier and then reproduces to AF signal. The capacitor tends to smooth out the RF or IF variations.

Automatic Gain Control

The automatic gain control (AGC) may be used between the second detector, the IF amp and the RF amp. The purpose of an AGC is to maintain a constant output from a receiver when the amplitude of the incoming signal varies. Figure 4 shows the block diagram for an AGC circuit as related to the other circuits.

The AGC rectifies part of the received signal at the output of the IF amplifier and creates a voltage across a suitable resistor. The magnitude of the voltage is proportional to the amplitude of the incoming signal. If the incoming signal decreases, the AGC bias decreases and the receiver gain raises.

Automatic Frequency Control

The automatic frequency control (AFC) circuit is used in many superheterodyne receivers to compensate for frequency drift. There may be drift due to small changes in the oscillator or in the carrier frequencies. The AFC adjusts the oscillating frequency to compensate for changes. The AFC consists of two basic parts: a frequency detector and a variable reactance circuit. These circuits may be contained in a single IC and linked to the oscillator

Squelch

Many tuners in transceivers, as well as some of the better receivers, may have a circuit that detects noise level in the signal and turns the output off if the noise is too loud. This is known as the squelch control.

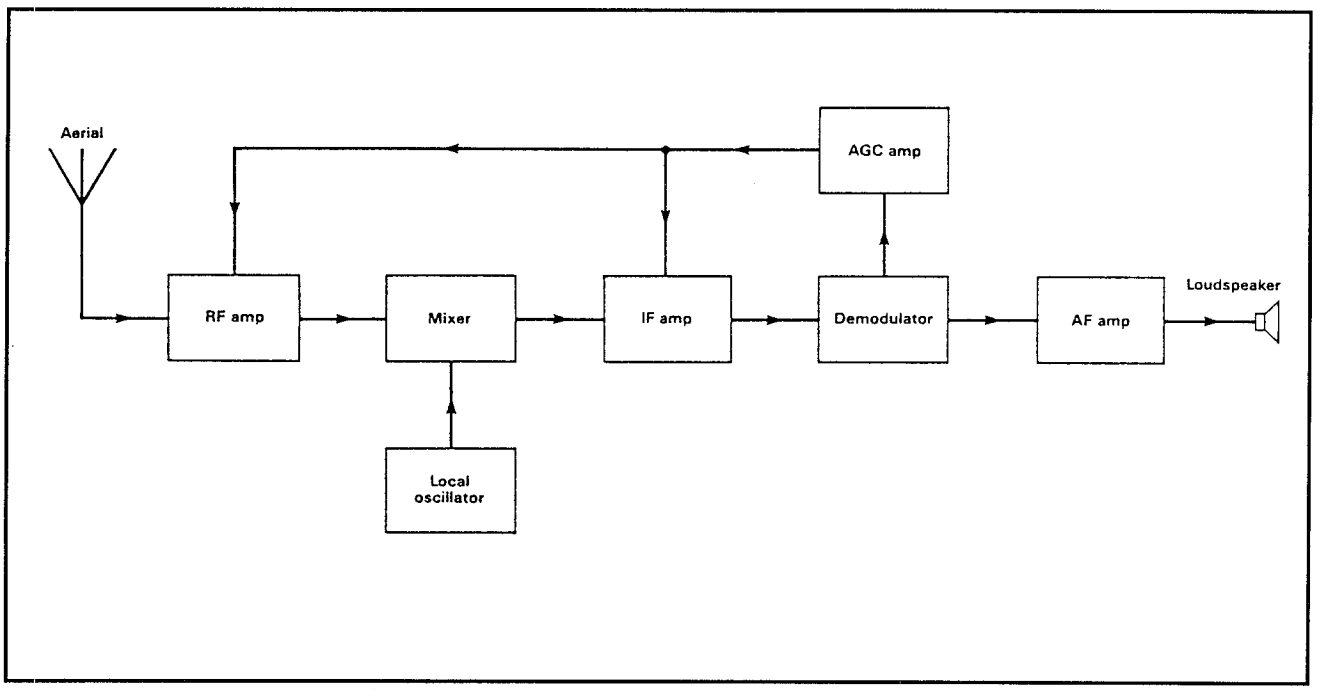

Figure 4: Block diagram of AGC application

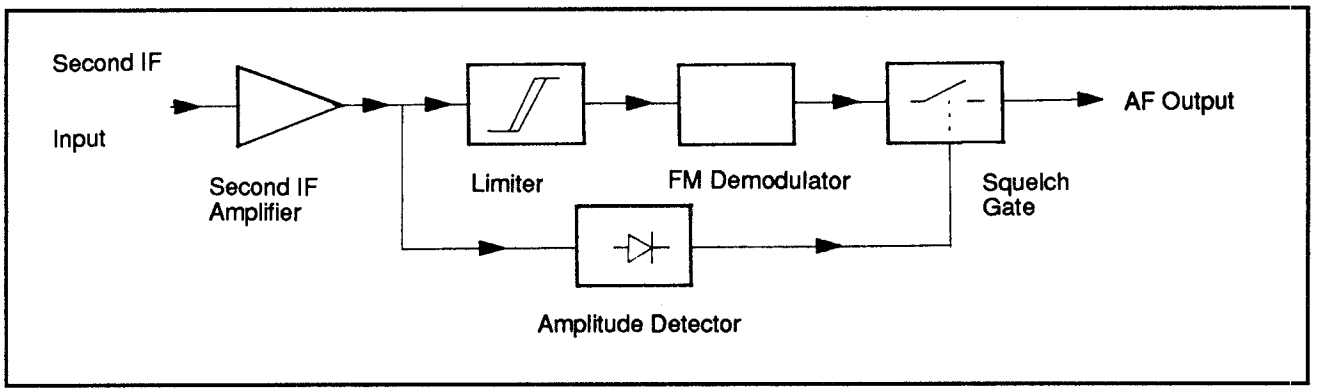

Figure 5: Basic squelch circuit

Figure 5 shows a basic squelch circuit. Noise always contains a high percentage of high audio frequencies above the 3 kHz maximum that amateur voice communications use.

When a carrier is not being received, the 3 kHz highpass filter (C1R1 and C2R2) is being fed high-amplitude, high-frequency AF noise energy from the discriminator. The diode rectifies this noise and creates a downward DC current through variable resistor R3.

Since the voltage-drop across this resistor is negative at the top, it places a high negative bias on the AF amplifier's gate circuit. The AF amplifier is driven into stopping (squelching) all output sound from the AF amplifiers.

7/R - F - T
Tuners

7/R - F - T - FMT
FM Tuners

Introduction

The basic function of an FM tuner is to receive a frequency modulated signal, separate the audio information, and send it to the system for use. It is essential to have a good strong signal before troubleshooting an FM tuner. Use another good working unit hooked to the same antenna as the unit being tested to see if the signal is good. If neither tuner functions, you know that the problem is within the antenna system (which includes the downlead). Figure 1 shows a typical FM tuner block diagram.

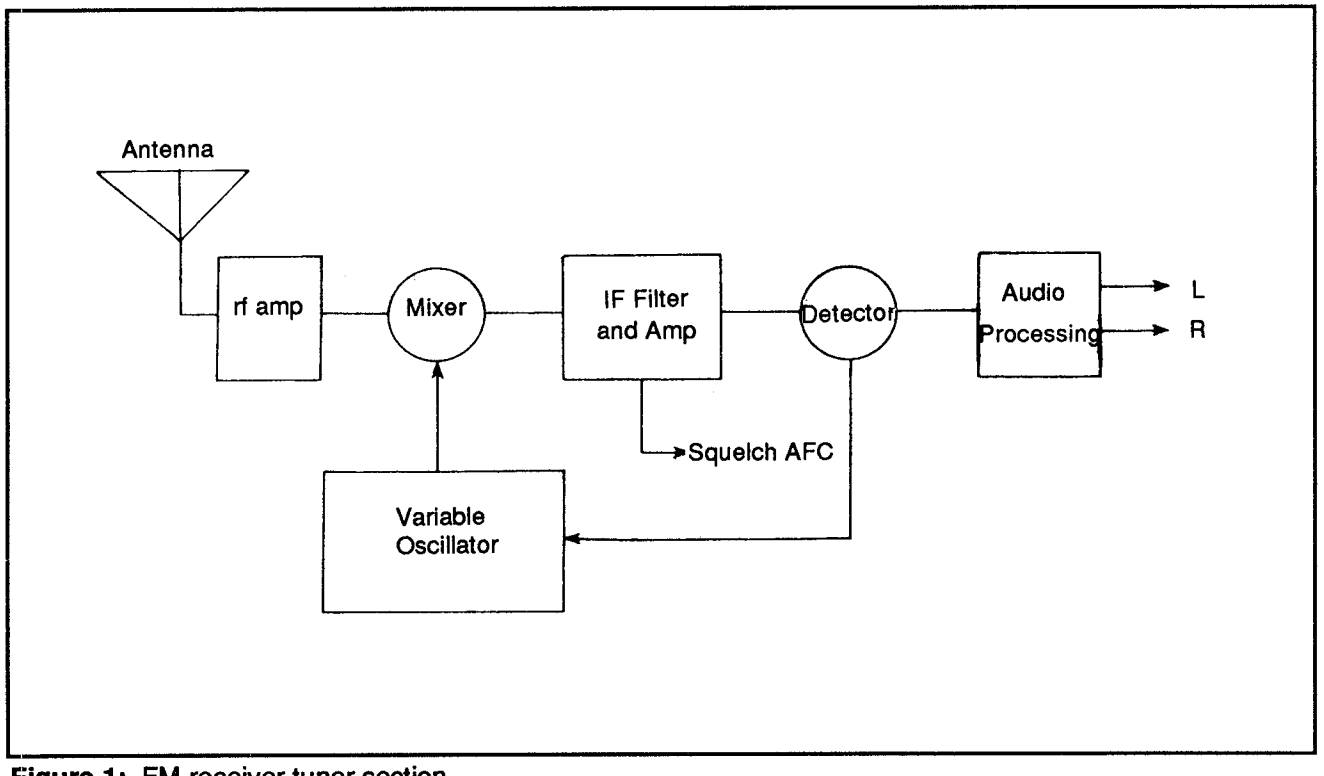

Figure 1: FM receiver tuner section

The signal received is frequency modulated with the center frequency at one of the assigned frequencies within the 88.1 and 107.9 MHz spectrum. The maximum allowable deviation from the center frequency (modulation) is ±75 kHz with a safety band of 25 kHz above and below. Thus, the spacing for stations along the FM band is set at 200 kHz intervals.

RF Amplifier

The incoming signal is amplified by the RF amplifier. The circuit is similar to that of an AM RF amp but must be able to handle frequencies to 108 MHz.

When replacing Q transistors within RF circuits one must remember the quality control factor. The Q transistors must be within the given frequency range for the RF circuit being tested. Replacing a Q transistor in a circuit with a Q transistor outside the spec range (i.e., a 450 to 512 Q transistor is replaced with a 350 to 420 Q transistor) may be more harm than good.

Oscillator

The oscillator of an FM tuner is kept at exactly 10.7 MHz above the station being tuned by the RF section. These FM oscillators may use mechanically tuned variable capacitors, voltage-variable capacitive diodes, phase-locked loops or other tuning means. AFC voltages may be received from the IF to adjust its frequency as needed for the strongest output to the IF. Figure 2 shows a typical oscillator stage.

Mixer

Combined in the mixer in the same fashion as the AM mixer is the oscillator 10.7 MHz signal and the incoming signal. If part of the 88 to 108 MHz bandwidth is distorted or attenuated, the oscillator and RF amplifier will not shift together to create the required 10.7 MHz IF for all tuned frequencies. Figure 3 shows a typical mixer stage.

Filter and IF Section

Miscellaneous signals may reach the IF through the mixer besides the 10.7 MHz signal. The miscellaneous signals may need to be filtered out at the IF input. Any amplitude modulation in the FM signal is limited (removes the RF voltage peaks so each cycle has the same amplitude).

The input FM sinewave is amplified to create a chopped-off FM squarewave. If there is a loss of output, it may indicate that one of the amplification stages of the IF has failed. If so, each input and output should be checked.

Realigning of the IF should not need to be done very often. Modern FM IF circuits do not drift due to heat. If there is a problem (indicated by poor sensitivity or distortion in the audio), inject a small unmodulated 10.7 MHz signal at the first stage of the IF and adjust for the maximum voltage output at the end of the IF strip. Start from the first IF and move to the last.

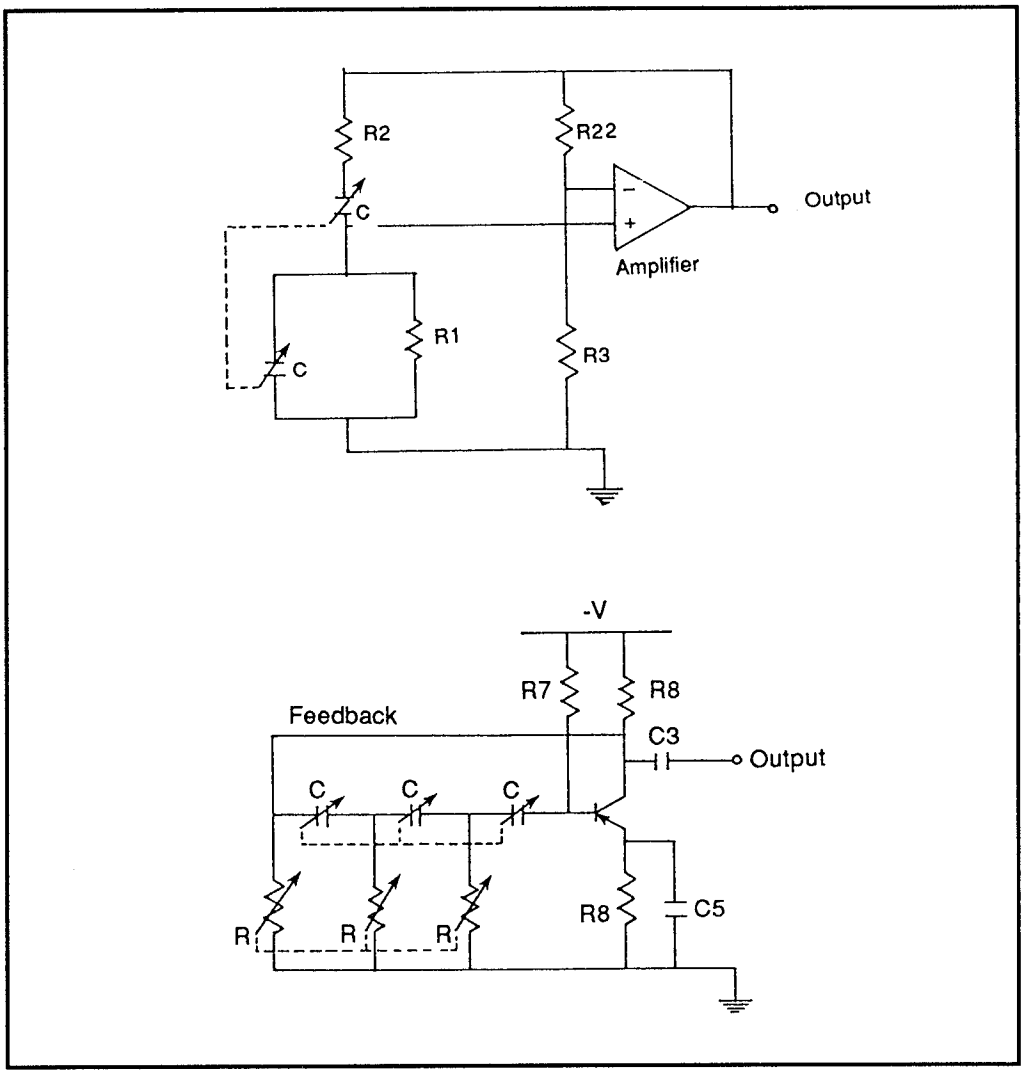

Figure 2: Oscillator circuit

The input signal should be reduced as you progress through the IF amps to avoid limiting. If not, there will be no way to tell if the adjustments are making any improvement.

Detector

As with AM, the FM detector separates the information from the modulated carrier (in FM, the 10.7 MHz carrier). The amplitude is determined by how much the IF frequency varies from the 10.7 MHz center. The frequency of the audio signal is determined by how rapidly the IF frequency deviates above and below the 10.7 MHz signal. If the detector is faulty, it will attenuate (reduce) or even block the signal it receives.

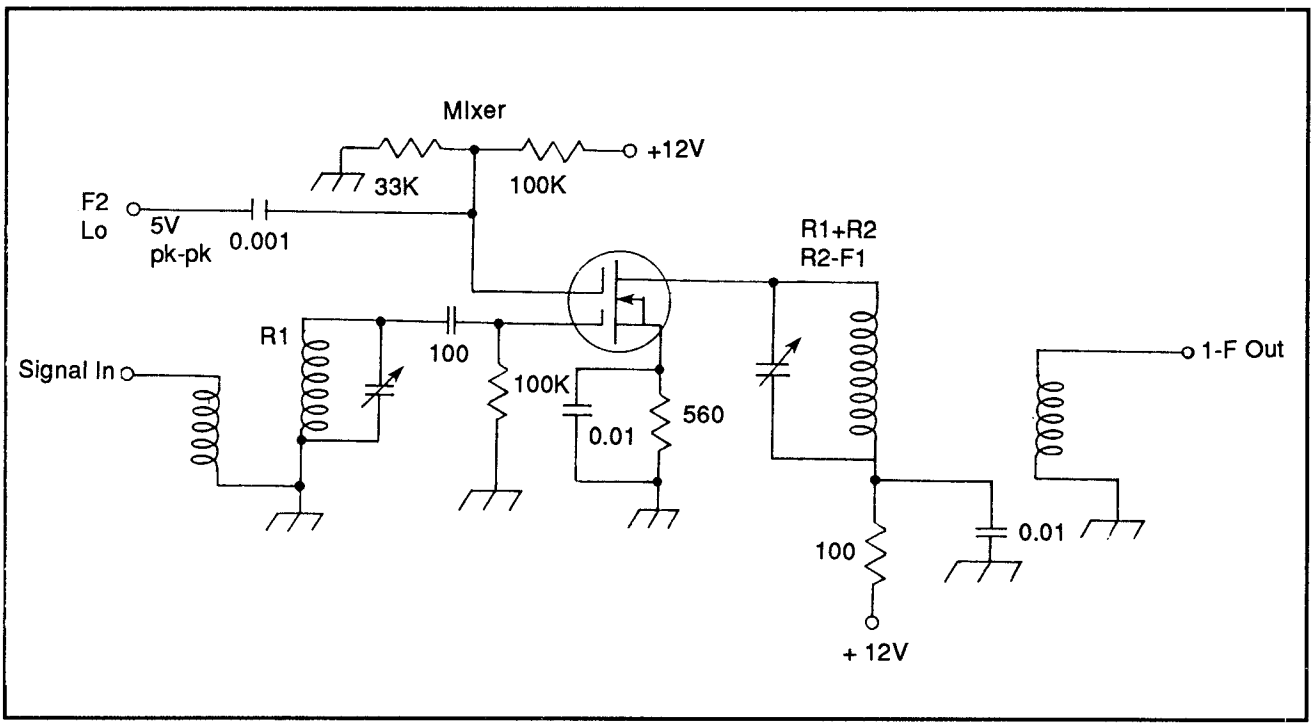

Figure 3: Mixer stage circuit

7/R - TE
Test Equipment

7/R - TE - HP8920A
HP 8920A RF Communications Test Set

The HP 8920A RF Communications Test Set is a single instrument combining the features of 22 individual radio test instruments. In this article we present a basic introduction to the many features of the 8920A, followed by a number of "hands on" applications in FM, AM, and SSB radio testing. Addtionally, since the HP 8920A can be expanded with several options, we show you how this instrument can be used as a spectrum analyzer.

Test Communication Systems

The HP 8920A (see Figure 1) can be used to test land mobile radios, cellular phones, and numerous other communications systems. This instrument greatly decreases troubleshooting time by simplifying standard measurement tasks and providing the required measurement capability in a single handy instrument. Figure 2 shows a typical test bench with the 8920A at work.

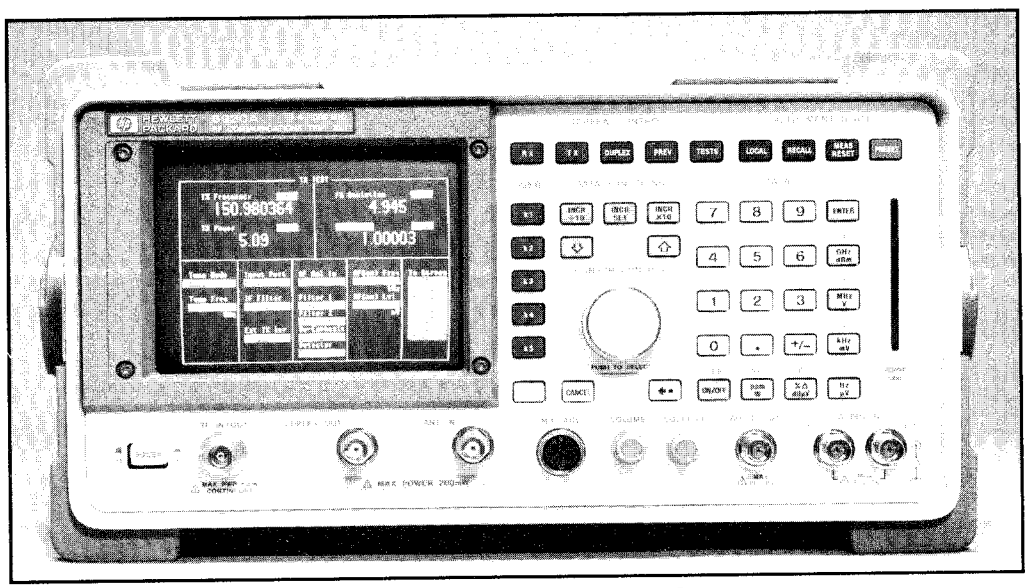

Figure 1: The HP 8920A RF Communications Test Set

Figure 2: The HP8920A in a typical shop application

Specialized Screens

The transmitters and receivers you test can be characterized with single-keys: RX, TX and DUPLEX. Each of these keys displays a specialized screen providing you access to the necessary controls and measurement results. Measured results may be displayed as digital read-outs, bar graphs, or both. You can easily access and change all settings and measurements using the front-panel knob and keys. If desired, you can save all your settings in non-volatile save and recall registers for future access.

Various Ports

The various ports on the HP 8920A allow you to quickly connect the receiver or transmitter you are testing to this instrument. A receiver with 2 mV sensitivity (typically < 1 mV) is available through the ANT IN port, for off-the-air monitoring of low-level signals. You can perform transmitter measurements of high-power signals up to 100 W intermittently (for 10 seconds) or 60 W continuous without the use of external attenuators.

Before we begin our overview of the HP 8920A RF Communications Test Set,

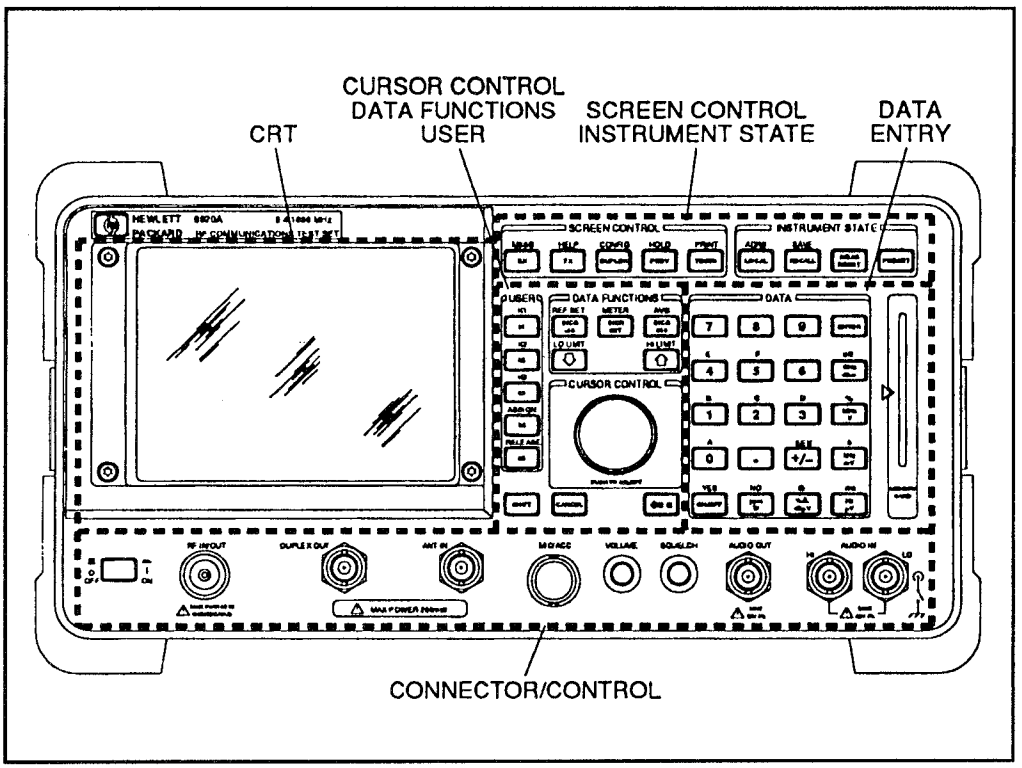

Figure 3: Front panel features of the HP8920A grouped by major functions

we want to explain the conventions we will be using in the article (refer to Figure 3). Screen titles are shown in bold upper-case type, for example, **RX TEST**. Field names and some measurements (such as **AC Level**) are indicated in lower-case bold type, for example, **RF Gen Freq**. The contents of a field, and some measurements (such as SINAD) are shown underlined, for example, 100.000000 or RF In. Key caps are shown in upper case letters, for example, PRESET. The SHIFT key is pressed and released to access the blue-labeled functions (those printed above the keys). When a SHIFTed function is called out in this article, the use of the SHIFT key is assumed and is not usually indicated. The function to be accessed is also shown in upper-case letters, for example, MSSG. During the actual test procedures, you'll see numbers in parentheses. Refer to the corresponding encircled number on the drawing for that procedure. This encircled number points to a control or indicator (for example, a knob) on the 8920A, that you would actuate during that step of the test procedure. If you are unfamiliar with any of the acronyms or abbreviations used in this article, explanations are given in Table 1.

Acronyms and Abbreviations	
Acronyms	
AMPS-TACS	Advanced Mobile Phone Service - Total Access Communications Systems
CDCSS	Continuous Digital Coded Squelch Systems
CTCSS	Continuous Tone Coded Squelch Systems
DTMF	Dual Tone Multiple Frequency
EIA	Electronic Industries Association
NMT	Nordic Mobile Telephone
SINAD	(Signal + Noise + Distortion) / (Noise + Distortion) Ratio
TIA	Telecommunications Industry Association
Abbreviations	
AFGen	Audio Frequency Generator
AGC	Automatic Gain Control
HPF	High Pass Filter
IF	Intermediate Frequency
LPF	Low Pass Filter
LSB	Lower Sideband
NPC	No Primary Code
OSC	Oscillator
RIT	Receiver Incremental Tuning
RX	Receiver
SSB	Single Side Band
TX	Transmitter
USB	Upper Sideband

Table 1: List of acronyms and abbreviations used in communications

Features of The HP 8920A

The features currently available for the HP 8920A RF Communications Test Set include:

- Synthesized AM/FM signal generator to 1,000 MHz
- AM/FM modulation analyzer
- Duplex offset generator
- SSB demodulator
- RF power meter
- RF frequency counter/frequency error meter
- Audio frequency counter
- AF power meter

- AC/DC voltmeter
- SINAD meter
- Distortion meter
- Two variable audio sources
- Digital oscilloscope
- 2 mV sensitivity (typically < 1 mV)
- Built-in I-BASIC controller

Options of the HP 8920A include:

- DC current meter
- Signaling encoder and decoder
- Function generator
- Spectrum analyzer and tracking generator
- Cellular phone test capability
- HP-IB/RS-232 interface buses for remote programming
- Radio test software
- Radio interface card

Explanation of the HP 8920A CRT

The CRT on the HP 8920A is used to display the various test screens, features measurement results, waveforms, and messages. Available screens include:

- **RX TEST** — Receiver test screen with RF and audio output controls and receiver measurement results.
- **TX TEST** — Transmitter test screen with RF and audio input/output controls and transmitter measurement results.
- **DUPLEX TEST** — Transmitter and receiver simultaneous test screen with RF and audio input/output controls and transmitter and receiver measurement results.
- **TESTS** — Access to creation, editing, copying, and execution of automated test programs loaded from memory cards, internal ROM/RAM, or an external disk drive.
- **RF GENERATOR** — Used to control and display the RF and modulation signals.
- **RF ANALYZER** — Used to process and display RF signal measurements.
- **AF ANALYZER** — Used to process and display audio signal measurements.
- **OSCILLOSCOPE** — Used to display the oscilloscope measurement function, with vertical, time, trigger, and marker controls.
- **SPECTRUM ANALYZER** (optional) — Used to display the spectrum

analyzer measurement function, with center frequency, span, reference level, marker, and tracking generator controls.

- **ENCODER** (optional) — Used to display the signaling encoder function, with function generator, tone sequence, DTMF, CDCSS, digital paging, cellular and LTR and EDACS trunking sub screens.
- **DECODER** (optional) — Used to display the decoded data signaling with function generator, tone sequence, DTMF, CDCSS, digital paging, cellular and LTR and EDACS trunking sub screens.
- **RADIO INTERFACE** (optional) — Used to control the various functions of the optional radio interface.
- **CONFIGURE** — Used to control the various functions including HPIB, serial parameters, print functions, screen intensity, and so forth.

Explanation of the HP 8920A Keys

The HP 8920A has several groups of keys plus a cursor control knob (Table 2 is a list of keys and their functions). The USER keys (see Figure 4) can instantly access fields without using the cursor control knob or changing screens. Fields

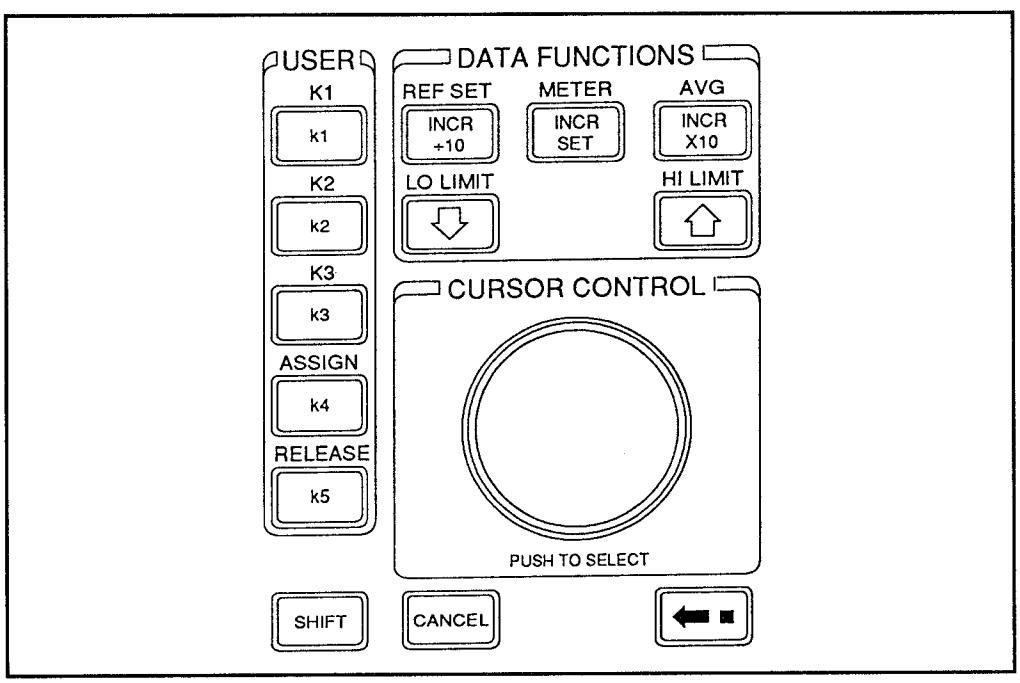

Figure 4: Front panel USER and DATA FUNCTIONS keys and CURSOR CONTROL knob

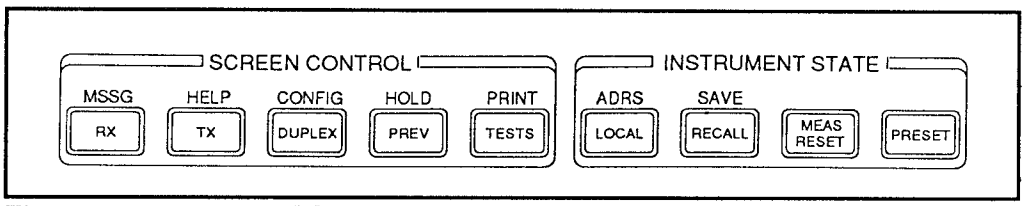

Figure 5: Front panel SCREEN CONTROL and INSTRUMENT STATE keys

can be accessed on the current screen using local user keys k1 through k5, or on screens not displayed using the global user keys k1' through k3'. Local and global user keys must initially be assigned to a field by selecting the desired field. You do this by using the knob, pressing the ASSIGN key, and then the desired k1 to k5 or k1' to k3' key. To remove an assignment, you select the desired field and then press the RELEASE key.

DATA FUNCTION Keys

To the right of the USER keys are the DATA FUNCTION keys, and just below these is the CURSOR CONTROL knob. With this knob, you can move the cursor to another field (rotate clockwise or counterclockwise); select fields, screens, and settings from a list of choices (push to select); and change numeric field values (push to select, rotate, then push again to enter).

SCREEN CONTROL Keys

The SCREEN CONTROL keys (see Figure 5) are used to access several instrument control and information screens. To the right of these are the INSTRUMENT STATE keys, which are used to change the state or condition of the instrument.

DATA Entry Keys

The DATA entry keys are used to enter or change alphanumeric data (0 to 9, A to F, ''.'', "+'', or "-'') for measurements or field entries (see Figure 6). Below these are the termination keys. These are used to input the entered data in the units selected. These keys also allow entry of YES or NO to confirm selected operations before they are executed.

Front Panel Connector/Control Features

Figure 7 shows the front panel connector and control features. The POWER button on the left turns the instrument on or off. The RF IN/OUT connector is a type-N female connector for output signals from the RF generator, and input signals (60 W continuous, or 100 W for 10 sec/min) to the RF analyzer. Nominal impedance is 50 Ω. The DUPLEX OUT connector is a female BNC connector for output signals from the RF and tracking generators. Nominal impedance is

HP 8920A Key Functions

DATA FUNCTIONS	
INCR / 10	Divides the increment value 10
INCR SET	Sets the increment field value
INCR X10	Multiplies the increment value by 10
⇧ ⇩	Increments/decrements field values, selects among various field choices, or moves the cursor within fields
LO LIMIT	Sets measurement limits for PASS/FAIL indications
HI LIMIT	Sets measurement limits for PASS/FAIL indications
REF SET	Sets or removes a measurement reference for relative AF and RF measurements
METER	Enables/disables the analog bar-graph meter
AVG	Enables/disables measurement averaging
SHIFT	Selects the blue-labeled functions listed above certain keys
CANCEL	Cancels an entry in progress, or stops a running IBASIC program.
⇦□	Moves the cursor to the left when entering numbers in a field, thereby erasing the previous characters.
SCREEN CONTROL	
RX	Displays the screen for test of receivers
TX	Displays the screen for test of transmitters
DUPLEX	Displays the screen for simultaneous test of transmitters/receivers
PREV	Returns the display to the previous screen
TESTS	Displays the screen used to access automated test program functions
MSSG	Displays any error or operation messages since power-up
HELP	Displays the screen that provides operating assistance
CONFIG	Displays the screen defining general operating functions
HOLD	Stops all measurements; selecting again resumes measurement
PRINT	Prints the entire contents of the displayed screen, the time and date, and any previously defined print title (if a printer is connected)
INSTRUMENT STATE	
LOCAL	Returns the instrument to manual control after HPIB control is used
RECALL	Lists and selects a previously stored instrument setup.
MEAS RESET	Clears the measurement "history" for all of the instrument's measurement algorithms, and re-starts all measurements that were in progress.
PRESET	Restores most instrument settings to their factory default states (configure settings are not affected)
ADRS	Displays the current HP-IB address
SAVE	Stores an instrument setup
DATA	
EEX	Enters the exponent for scientific notation
TERMINATION	
ENTER	Selects a field or screen, and enters numbers when the unit of measure is not changed or not specified
ON/OFF	Enables and disables measurements, and turns numeric fields (such as amplitude) on and off

Table 2: Key functions of the HP 8920A RF Communications Test Set

50 Ω. The ANT IN connector is a female BNC connector for input and analysis of low-power RF signals (< 200 mW), and for off-the-air measurements. Nominal impedance is 50 Ω.

The MIC/ACC connector is an 8-pin female DIN connector that provides various connections including:

- Audio microphone input for modulation of the RF output signal
- Control of the RF generator's output state
- Switching between the **TX TEST** and **RX TEST** screens
- Provides a keying signal to control a transmitter under test

The VOLUME control adjusts the speaker volume for monitoring. The SQUELCH control adjusts the squelch threshold for AM, FM, or SSB signals.

AUDIO OUT Connector

The AUDIO OUT connector is a female BNC connector to output signals from AF generators 1 and 2 (including encoder functions). Nominal output impedance is less than 1 Ω at 1 kHz. The AUDIO IN connectors are two female BNC connectors to input audio signals to the AF analyzer. Nominal impedance is 1 MΩ or 600 Ω.

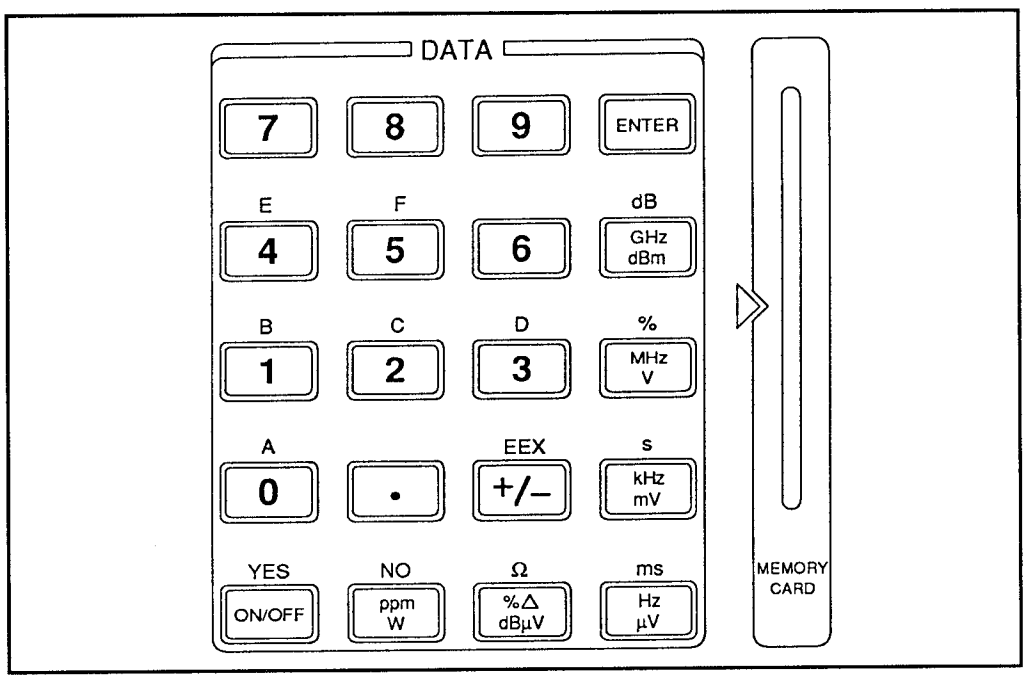

Figure 6: Front panel DATA entry keys

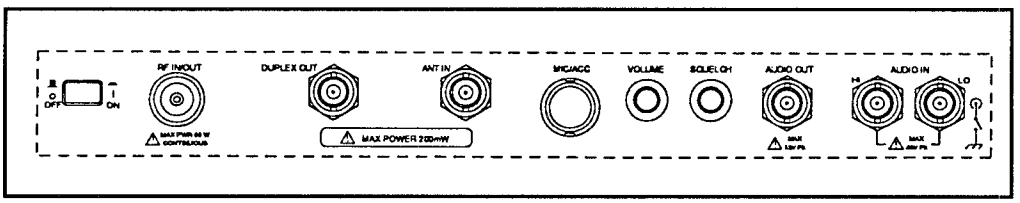

Figure 7: Front panel connector/control features

HI is the signal input for both grounding and floating input configurations. LO may be selected to connect the signal reference to ground or float.

MODULATION INPUT Connector

Finally, we come to the connectors and controls located on the rear panel (see Figure 8). The MODULATION INPUT connector is a female BNC connector to input an external signal to the modulators. Maximum input level is 12 V peak (full scale input equals 1 V peak), and nominal input impedance is 600 Ω. The CRT VIDEO OUTPUT connector is a female BNC connector that provides CRT video to an external "multisync" type video monitor.

The EXT SCOPE TRIGGER INPUT connector is a female BNC connector to input an external oscilloscope trigger. Maximum input level is approximately 20 V peak.

10 MHz REF OUTPUT Connector

The 10 MHz REF OUTPUT connector is a female BNC connector that outputs a 10 MHz reference signal for locking external instruments. The 10 MHz REF INPUT connector is a female BNC connector used to input an external 1, 2, 5, or 10 MHz reference signal.

The AUDIO MONITOR OUTPUT connector is a female BNC connector that provides an output from the AF analyzer. Level is not affected by the VOLUME control, but is affected by the SQUELCH control. The chassis ground terminal provides a chassis connection and also provides a safety ground when DC power is used.

DC INPUT Connector

AC/DC selects the instrument's power source. The DC INPUT connector is a 2-pin female connector to input 11 to 28 VDC @ 120 W (maximum) for DC operation. The DC FUSE holder is a 15 A, 250 V fuse for DC operation. The AC INPUT connector is a common 3-pin male connector to input 100 to 240 VAC for AC operation. The AC FUSE holder is a 5 A, 250 V fuse for AC operation.

The HP-IB connector is an optional 24-pin connector that provides communi-

cation between the HP 8920A and other instruments or a computer using the IEEE-488 Hewlett-Packard Interface Bus (HP-IB). The SERIAL PORT connector is an optiona 6-pin RJ-11 dual serial (RS-232C) port for entering programs, printing test results and screen images, and sending test results to external devices. The DC CURRENT MEASUREMENT terminals are optional dual banana jacks to measure from 0 to +10 ADC. The RADIO INTERFACE is an optional 37-pin "D" style connector for parallel and serial communications, and audio/transmitter control lines between the HP 8920A and external radio equipment.

Performing Measurements

Now that you have become acquainted with the HP 8920A's controls, indicators, and major functions, let's start testing and troubleshooting some communications equipment. We will cover five major groups of measurements as follows:

- Testing FM Radios
- Testing AM Radios
- Testing SSB Radios
- Spectrum Analyzer Measurements
- Oscilloscope Measurements

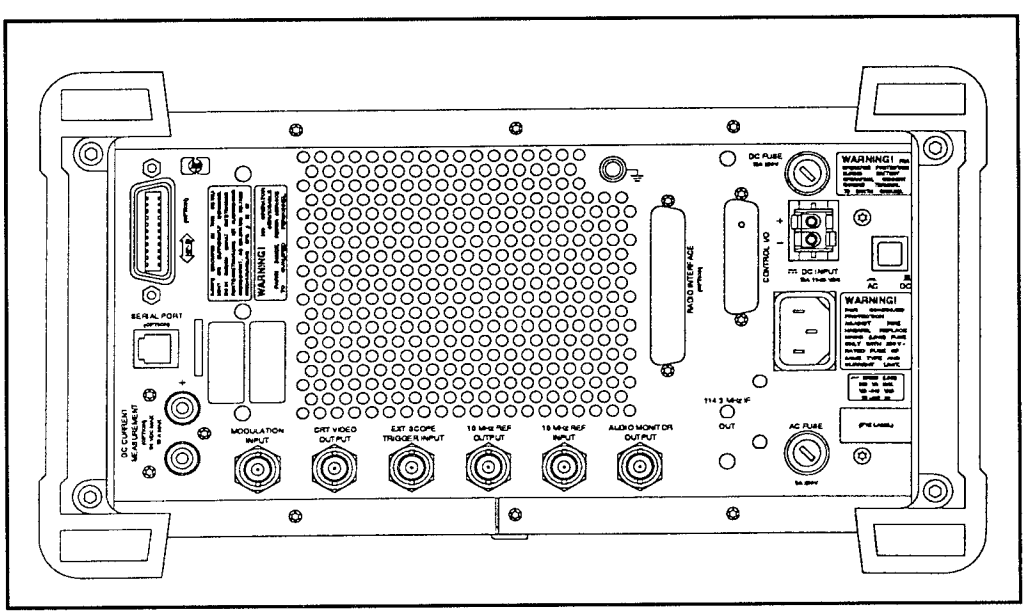

Figure 8: Rear panel features

Testing FM Radios

You can perform many different kinds of FM radio tests with the HP 8920A RF Communications Test Set. Table 3 lists 19 of these tests, broken down into transmitter and receiver measurements. We will cover one test from each group in a "hands on" manner, showing exactly how to perform the test.

FM Microphone Sensitivity and Modulation Limiting Measurement
This procedure measures an FM transmitter's audio input sensitivity, and modulation limiting capability (if available). Modulation limiting is verified over the transmitter's audio frequency range. Before we begin the procedure, let's first review microphone types and their principles of operation.

Microphones obviously convert sound waves into equivalent electrical impulses. This can be accomplished using various technologies and materials. Let's investigate four microphone types.

HP 8920A FM Radio Tests
Transmitter Measurements
Off the Air Monitoring/Determining Unknown Transmitter Carrier Frequency
Output Power, Deviation, and Frequency/Frequency Error
Deviation and Symmetry
Microphone Sensitivity and Modulation Limiting
CTCSS Encoder Frequency and Deviation
CDCSS Coding and Deviation
DTMF Encoding and Deviation
Audio Distortion
Harmonics and Spurious Output
Receiver Measurements
Audio Output Power
SINAD, Receiver Center Frequency, and Modulation Acceptance Bandwidth
Variation of Sensitivity with Signal Frequency
20 dB Quieting Sensitivity
Critical and Maximum Squelch Sensitivity
CTCSS Sensitivity and Bandwidth
CDCSS Sensitivity
Audio Frequency Response
Audio Distortion
Spurious Response Attenuation

Table 3: FM radio tests

Dynamic Microphone

First, the *dynamic* or moving coil microphone uses the same principle as the dynamic speaker. The two differ only in their energizing and response sources (the sound producer — diaphragm or cone — and electromagnetic fields are reversed). Refer to Figure 9 and note the diaphragm is attached to the coil, which is centered within the air gap of the permanent magnet. This "assembly," if you will, moves within a fixed magnetic field. When you speak, your voice physically displaces the diaphragm, causing the coil to move. This cuts the lines of force within the magnetic field. This alternating or changing field produces a corresponding flow of current, which faithfully follows your voice pattern.

Crystal or Ceramic Microphone

The second type of microphone is the *crystal or ceramic* microphone. The crystal or ceramic source producing the voltage uses the piezoelectric effect. When you apply pressure to a piezoelectric substance, a voltage results, and vice-versa. Rochelle salts and quartz crystal also exhibit this phenomenon (see Figure 10). The microphone diaphragm is physically linked with the ceramic or crystal element. When the diaphragm is set in motion, by your voice, a stress results on these substances. These stresses or minute pressures produce voltages. Crystals are adversely impacted by heat; temperatures around 120°F can ruin a crystal. Ceramics, though, can withstand both temperature and humidity extremes.

Carbon Microphone

Unlike the previous microphones, *carbon* microphones do not generate their own voltages, they require an external source of power. Figure 11a illustrates the variable resistance principle of operation, with the microphone's equivalent circuit shown in Figure 11b. The carbon microphone must be in series with a DC source and the primary winding of an appropriate transformer. Solid carbon is

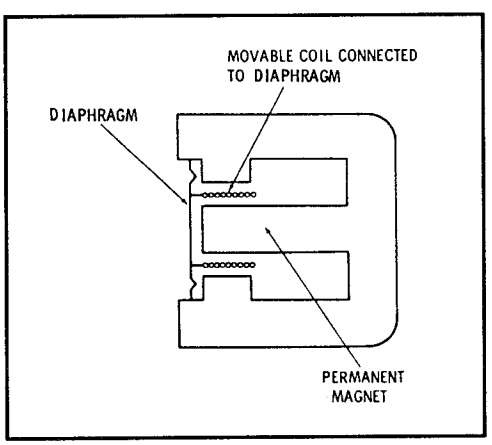

Figure 9: Basic construction of a dynamic microphone

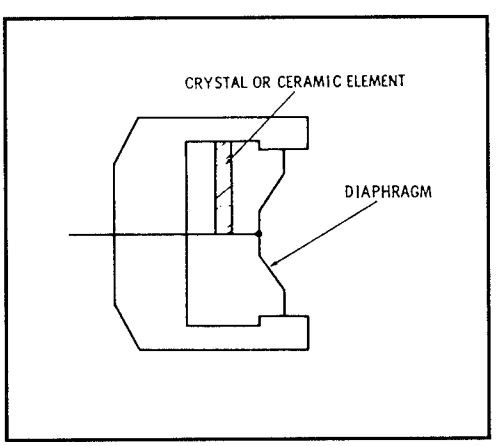

Figure 10: Basic construction of a crystal or ceramic microphone

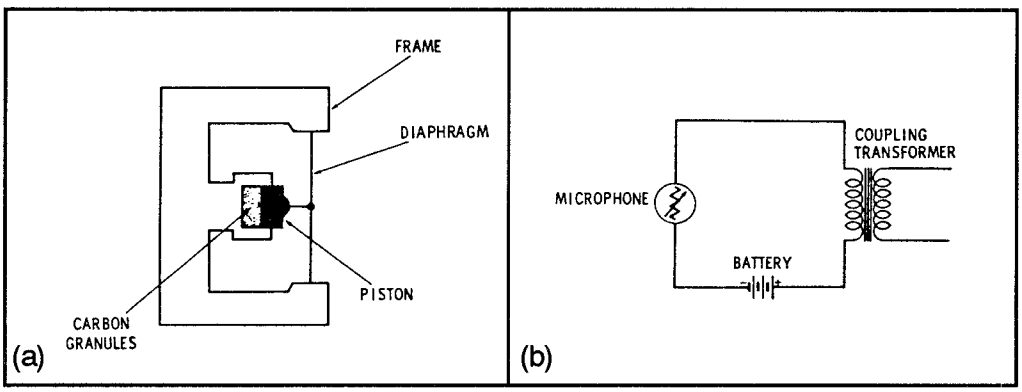

Figure 11: Basic construction of a carbon microphone (a), and its equivalent circuit (b)

a relatively good conductor; however, in granular form (such as occurs in a carbon microphone), it offers variable resistance. This resistance is a function of your voice's sound waves impacted upon these granules. With no voice pressure a steady stream of current flows through the carbon microphone. With voice pressure against the diaphragm, the piston-like plunger changes the pressure on the carbon granules, and thus the resistance.

Reluctance Microphone

The last type of microphone is the *magnetic* microphone, which is also called a *reluctance* type microphone. Greatly simplified, reluctance in a magnetic field means resistance to change. The most popular version of this microphone is the variable-reluctance magnetic microphone. It is quite similar to the dynamic microphone, except it uses a stationary rather than a movable coil. A pin is used to connect the center leg to the diaphragm as shown in Figure 12. The outer legs

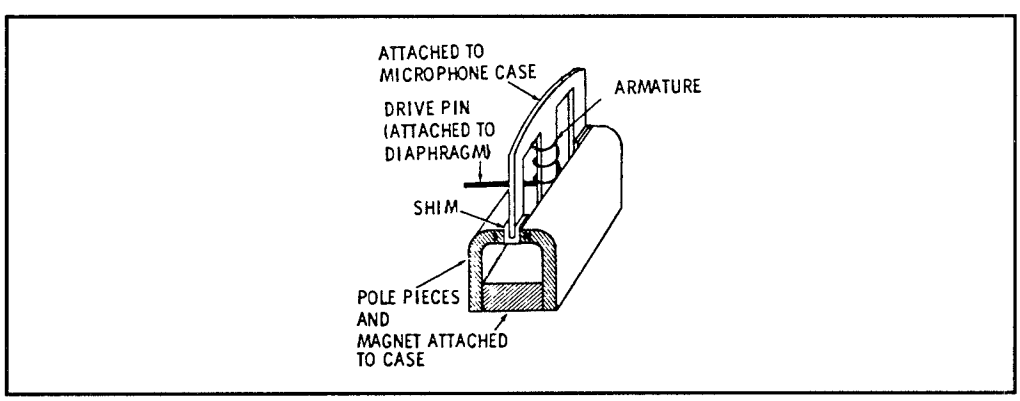

Figure 12: Basic construction of a variable reluctance microphone

of the armature are evenly spaced between the poles of the permanent magnet, and are held in place with nonmagnetic shims. When no sound is impressed upon the magnetic microphone, the diaphragm is naturally at rest. In this state, the center leg of the armature is held midway between the two pole pieces. When you speak into the magnetic microphone, it sets the center leg in motion and induces a voltage in the coil. This is the magnetic microphone's output.

Here is how you would perform the FM microphone sensitivity and modulation limiting measurement with the HP 8920A:

1. Connect the Transmitter as shown in Figure 13. The RF present at the HP 8920A RF IN/OUT connector must not exceed 60 W continuous (or 100 W for 10 sec/minute).
2. On the HP 8920A press the PRESET key (5), and press the TX key (2). Then set **Filter 1** to 300 Hz HPF, and set **Filter 2** to 3 kHz LPF (see Figure 14).
3. Key the transmitter.
4. Using the knob (3) and data entry keys (4), set **AF Gen1 Lvl** so that displayed

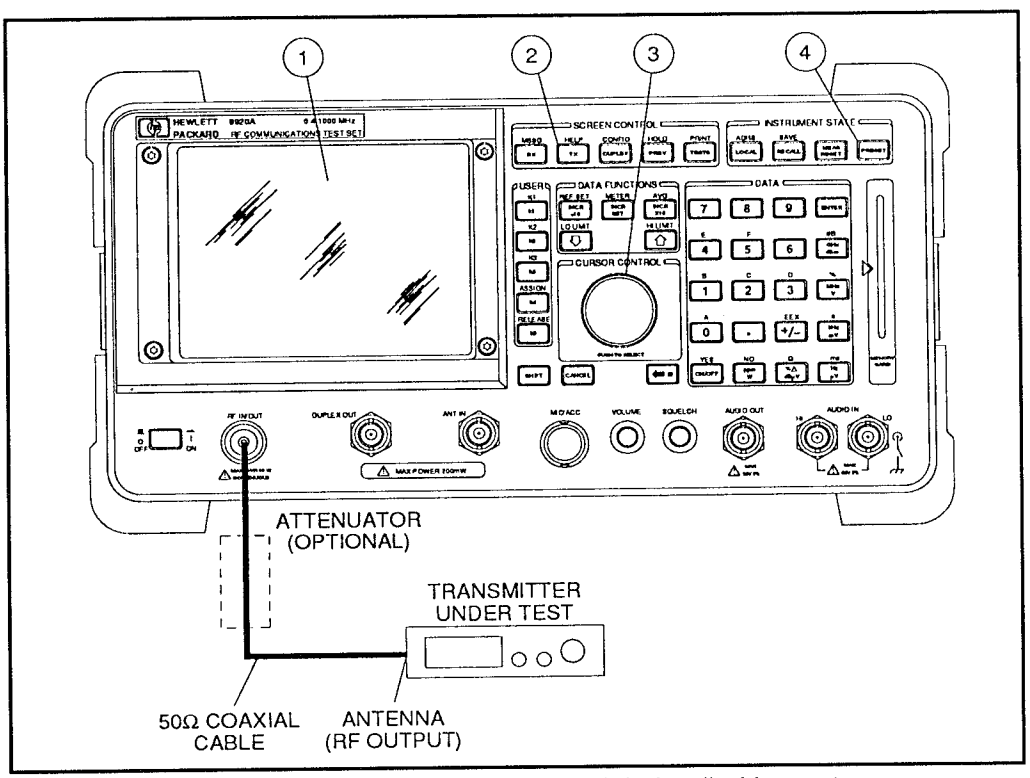

Figure 13: FM microphone sensitivity and modulation limiting setup

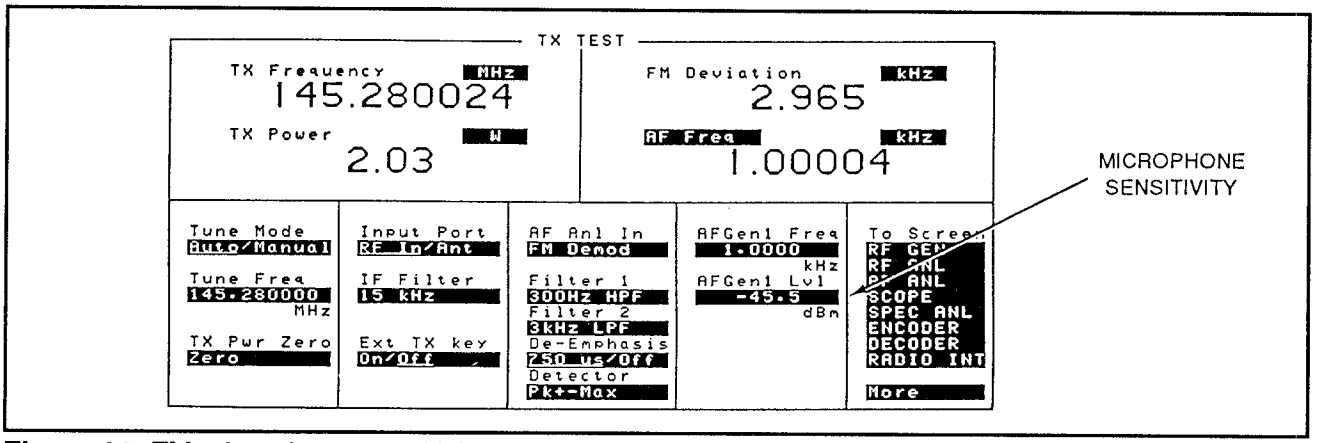

Figure 14: FM microphone sensitivity and modulation limiting measurement

FM deviation is 60% of the transmitter's specified frequency deviation (typically 3 kHz). Microphone sensitivity is shown as **AF Gen1 Lvl.**

5. Using the knob (3) and data entry keys (4), set **AF Gen1 Lvl** measurement units to **dBm**. Increase **AF Gen1 Lvl** by 20 dB. Displayed FM deviation should not exceed the transmitter's maximum specified deviation. Change **AF Gen1 Freq** from 300 Hz to 3 kHz (in 100 Hz increments) and verify that the displayed FM deviation does not exceed the transmitter's maximum specified deviation.
6. Unkey the Transmitter.

The next test is from the FM receiver measurements group.

FM SINAD, Receiver Center Frequency, and Modulation Acceptance Bandwidth Measurement

This procedure measures an FM receiver's sensitivity (for 12 dB SINAD), center frequency, and modulation acceptance bandwidth. All measurements are read from the HP 8920A screen. Here is how you would perform the test:

1. Connect the receiver as shown in Figure 15.
2. On the HP 8920A, press the PRESET key (6) and the RX key (2).
3. Using the knob (3) and data entry keys (5), set **RF Gen Freq** to the receiver operating frequency (see Figure 16). Set **Amplitude** to -47 dBm (1 mV), set **AF Gen1 To** to 60% of the receiver's specified maximum frequency deviation (typically 3 kHz). Set **Ext Load R** to the test load resistance. Set **AC Level** meter to measure watts.
4. On the receiver, set power to *on*. If required, set frequency to the same value

as step 3. Set squelch to minimum. Set RF gain to maximum (if equipped). Set coded squelch feature (if equipped) to *off*.

5. Using the knob (3) and data entry keys (5), decrease **Amplitude** until the SINAD meter reads 12 dB.
6. Sensitivity (12 dB SINAD) is displayed as **Amplitude** as shown in Figure 16. Record the level (in dBm) for use later in the procedure. If desired, verify that the receiver is tuned to a specific frequency (receiver center frequency) by performing steps 7 and 8.
7. Using knob (3) and data entry keys (5), slowly increase or decrease **RF Gen Freq** (in 100 Hz steps) until the SINAD meter reads maximum.
8. Receiver center frequency is displayed as **RF Gen Freq** as shown in Figure 16.
9. Using the knob (3) and data entry keys (5), reset **RF Gen Freq** to receiver operating frequency, if changed. Set **Amplitude** to a level 6 dB higher (more

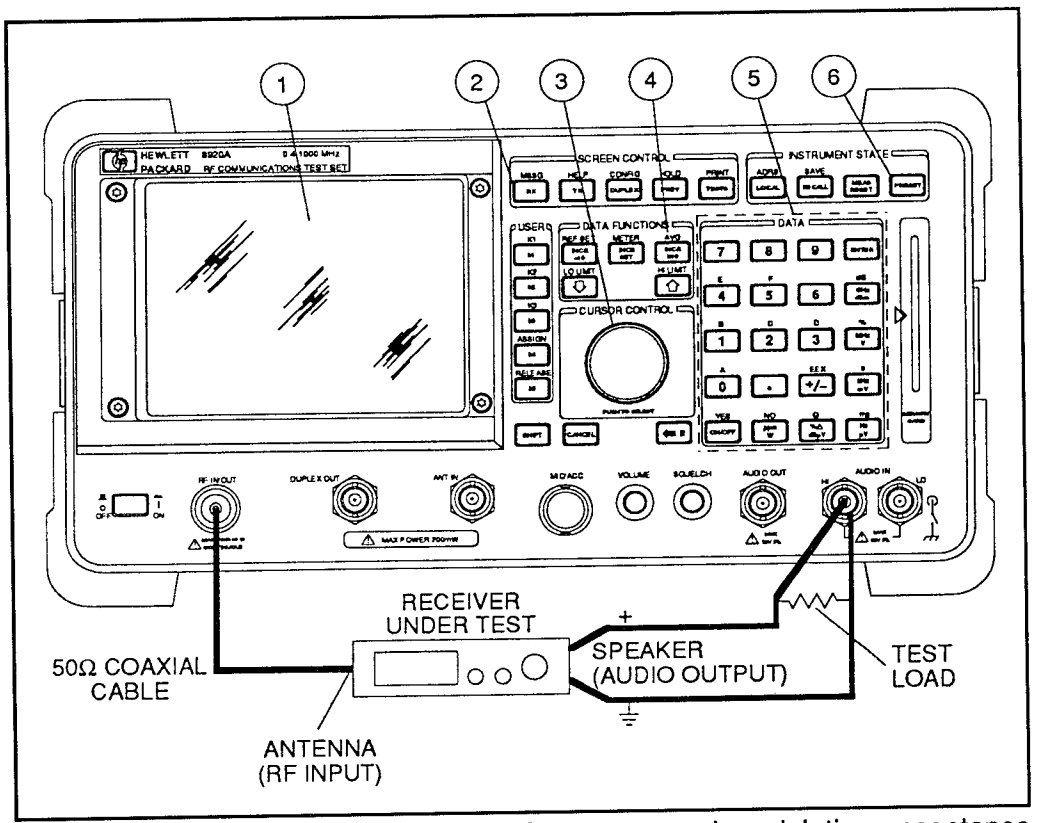

Figure 15: FM SINAD, receiver center frequency, and modulation acceptance bandwidth setup

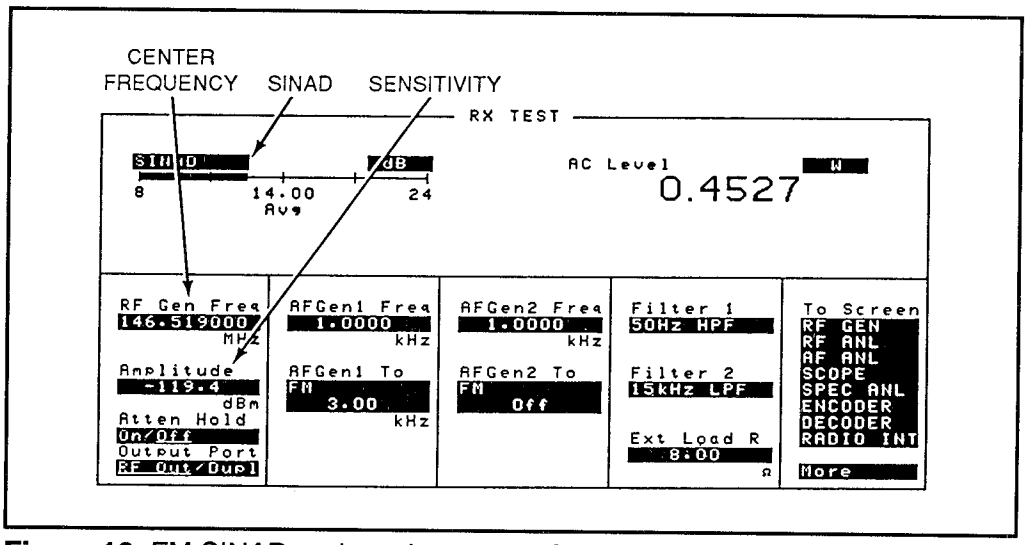

Figure 16: FM SINAD and receiver center frequency measurement

positive) than the level recorded in step 6. Increase **AF Gen1 To** deviation until SINAD meter reads 12 dB.

10. Modulation acceptance bandwidth is displayed as **AF Gen1 To** deviation as shown in Figure 17.
11. After measurement, set receiver to *off*.

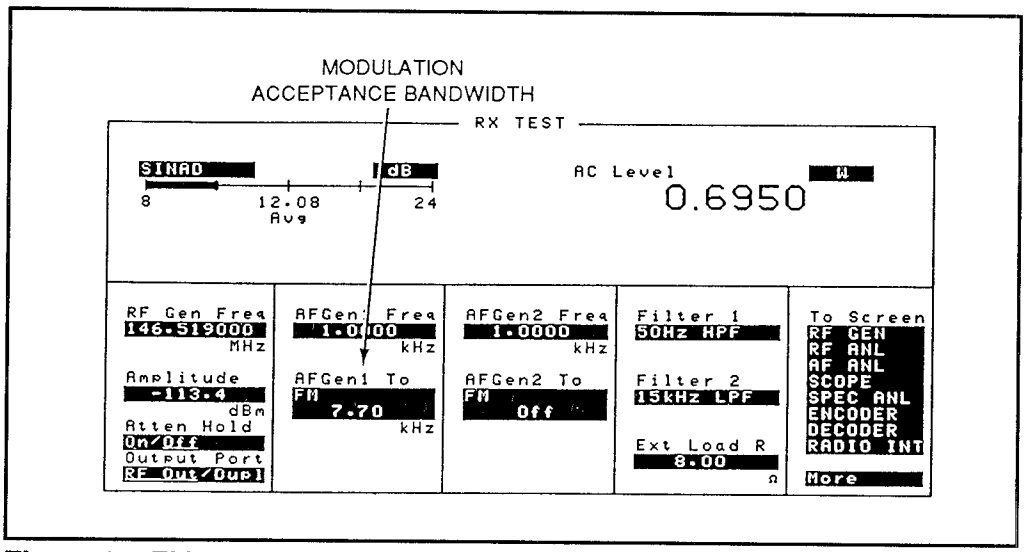

Figure 17: FM modulation acceptance bandwidth measurement

Testing AM Radios

As with FM, you can perform many different kinds of AM radio tests with the HP 8920A RF Communications Test Set. Table 4 lists 13 of these tests, broken down into transmitter and receiver measurements. As with FM, we will cover one test from each group in a "hands on" manner, showing exactly how to perform the test.

AM Envelope Display

AM Envelope Display
This procedure displays an AM Transmitter's AM envelope. In order to display the envelope on the oscilloscope, the SSB demodulator is used to down convert the incoming RF signal to an IF frequency of 20 kHz.

Here is how you would perform the measurement:

1. Connect the transmitter as shown in Figure 18.
2. On the HP 8920A, press the PRESET key (5), and press the TX key (2).
3. Key the Transmitter.
4. Using the knob (3) and data entry keys (4), set **AF Anl In** to AM Demod. Adjust **AF Gen1 Lvl** until **AM Depth** is 80% (see Figure 19).
5. Unkey the Transmitter.
6. On the HP 8920A, set **Tune Mode** to Manual. Set **Tune Freq** to a frequency

HP 8920A AM Radio Tests
Transmitter Measurements
Off the Air Monitoring/Determining Unknown Transmitter Carrier Frequency
Output Power, Modulation Depth, and Frequency/Frequency Error
Microphone Sensitivity and Modulation Limiting
Audio Distortion
Harmonics and Spurious Output
Envelope Display
Receiver Measurements
Audio Output Power
Sensitivity
Automatic Gain Control (AGC)
Squelch Sensitivity
Audio Frequency Response
Audio Distortion
Spurious Response Attenuation

Table 4: AM radio tests

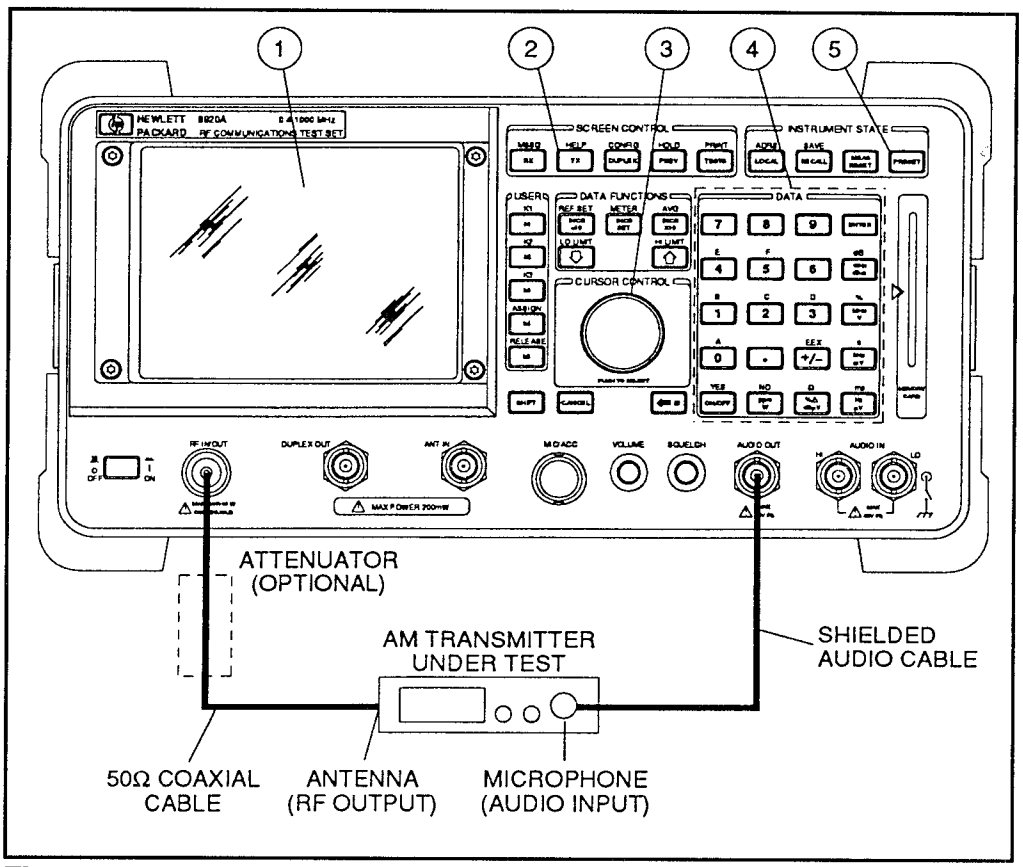

Figure 18: AM envelope display setup

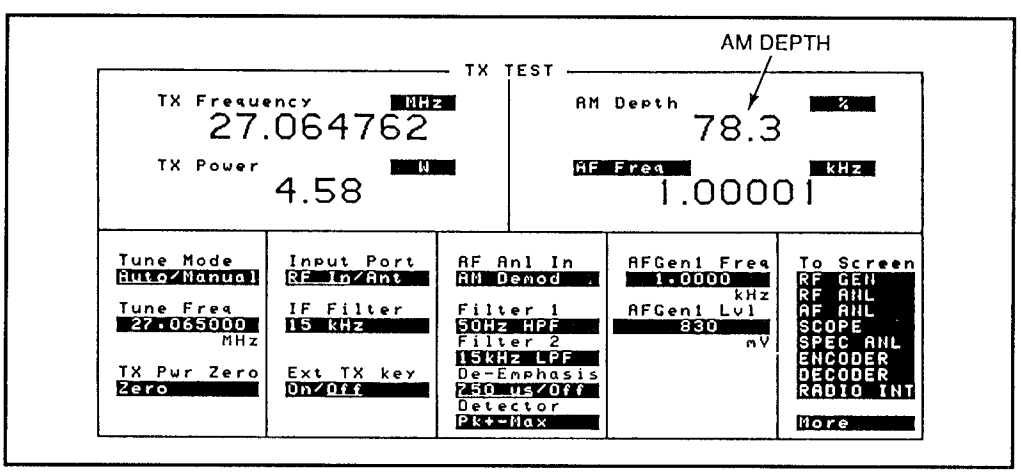

Figure 19: AM depth

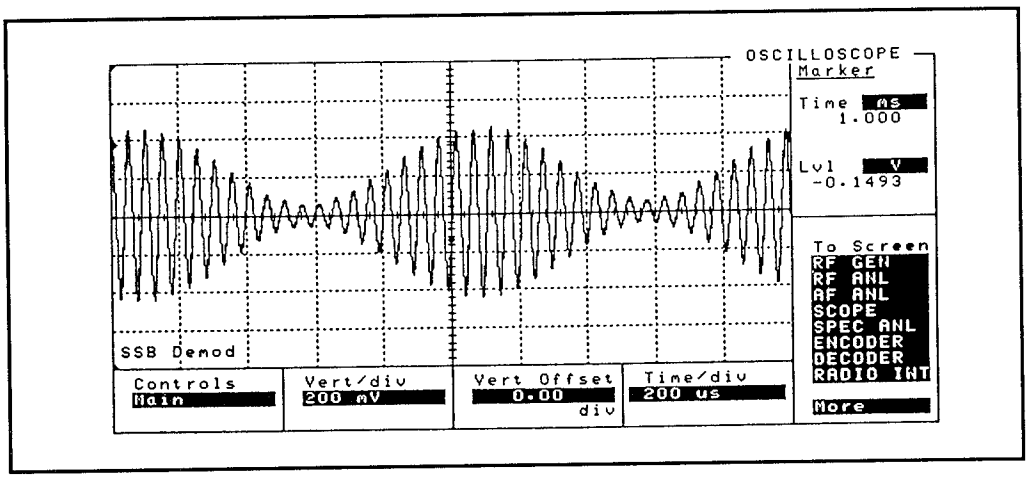

Figure 20: AM envelope

20 Khz higher than presently indicated (for example, if current **Tune Freq** is 120.540000 MHz, change to 120.560000 MHz). Set **AF Anl In** to SSB Demod. Set **IF Filter** to 230 kHz. Set **AF Anl In** to SSB Demod. Set **Filter 1** to <20 Hz HPF. Set **Filter 2** to >99 kHz LP. Set **De-Emphasis** to Off. Select **SCOPE** from the **To Screen** field.

7. Key the transmitter.
8. On the HP 8920A, set **Vert/div** to optimize the displayed waveform (typically 200 mV). Select Main from the **Controls** field, then select Trigger from the **Choices** field. Set **Lvl** V until the displayed waveform is stable, typically 1.9 (see Figure 20).
9. Unkey the Transmitter.

AM AGC Measurement

AM AGC Measurement

This procedure measures an AM receiver's automatic gain control (AGC). A reference is established at 13 dB below full rated audio output, and the receiver's output level and distortion are measured with inputs varying from 500 mV to 5 mV.

Here is the way you would perform this measurement with the HP8920A:

1. Connect the receiver as shown in Figure 21.
2. On the HP 8920A, press the PRESET key (6), and press the RX key (2).
3. Using the knob (4) and data entry keys (5), set **RF Gen Freq** to the receiver operating frequency. Set **Amplitude** to -47 dBm (1 mV). Set **Output Port** to Dupl. Set **AFGen1 To** to AM at the desired modulation depth (typically

30%). Set **Ext Load R** to the test load resistance. Set **AC Level** meter to measure watts (see Figure 22).

4. On the receiver, set power to *on*. If required, set frequency to the same value as step 3. Set squelch to minimum. Set RF gain to maximum (if equipped). Set the volume control until the AC level reads 100% of the receiver's specified audio output.
5. On the HP 8920A, select **AC Level** then press the REF SET key (3).
6. Decrease the receiver's volume control until the **AC Level** meter reads -13 dB.
7. On the HP 8920A, select **AC Level** then press the REF SET key (3). Change SINAD meter to read distortion. Tune **Amplitude** over the range of 500 mV to 5 mV. Distortion (for given input) is displayed as shown in Figure 22 (should not exceed ±10%). Relative output level (for given input) is displayed as **AC Level** (should not exceed ±10 dB).
8. After measurement, set receiver to *off*.

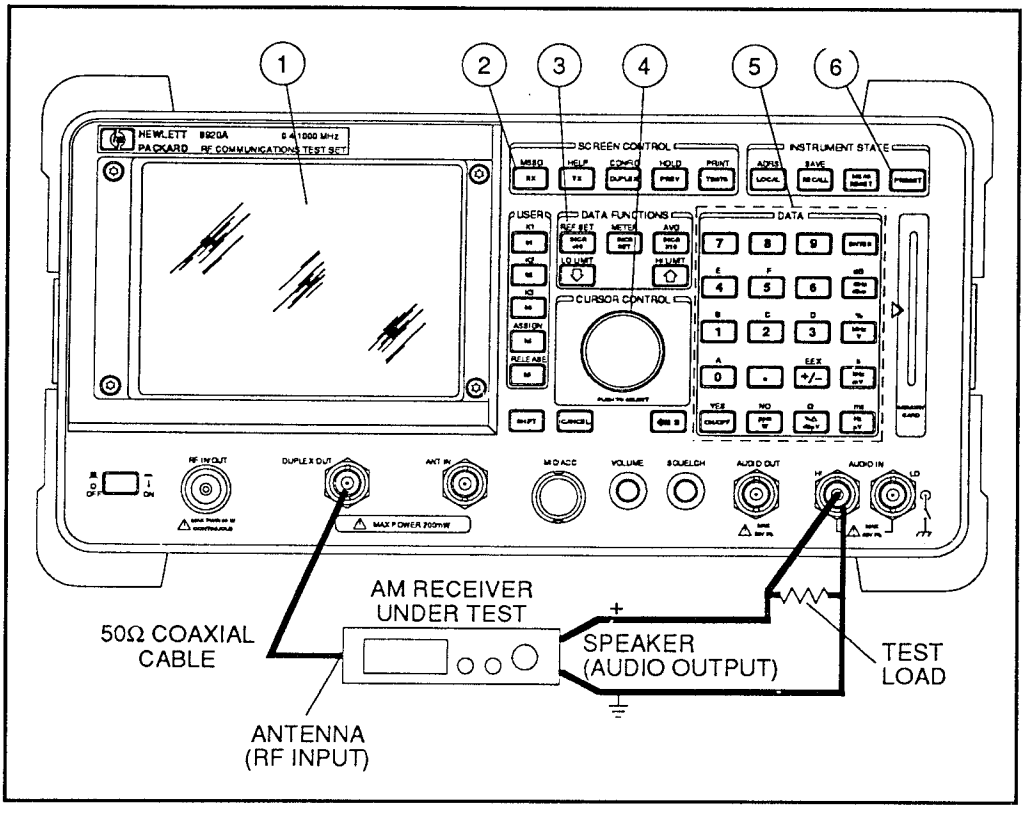

Figure 21: AM AGC setup

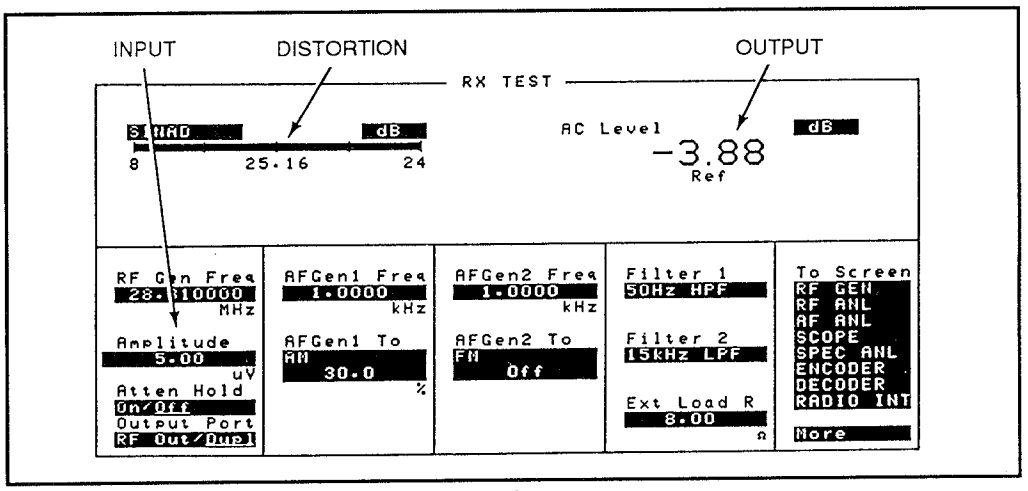

Figure 22: AM AGC measurement results

Testing SSB Radios

As with FM and AM, you can perform many different kinds of SSB radio tests with the HP 8920A RF Communications Test Set. Table 5 lists eight of these tests, broken down into transmitter and receiver measurements. As with FM and AM, we will cover one test from each group in a "hands on" manner, showing exactly how to perform the test.

SSB Frequency or Frequency Error Measurement
This procedure measures a SSB transmitter's frequency (or frequency error) into 50 Ω. The transmitted signal frequency is measured, then depending upon the sideband used (upper or lower), the actual frequency or frequency error is calculated.

There are some special test considerations. The accuracy and stability of both the

HP 8920A SSB Radio Tests	
Transmitter Measurements	**Receiver Measurements**
Frequency or Frequency Error	Audio Output Power and Distortion
Rated Output Power/Carrier Suppression	Sensitivity
Harmonics and Spurious Output	Squelch Sensitivity

Table 5: SSB radio tests

AF source and the RF counter, and knowledge of the transmitter's carrier suppression and the current operating sideband selection are required for precise frequency/frequency error measurements.

Here is how you would make the measurement:

1. Connect the transmitter as shown in Figure 23.
2. On the HP 8920A, press the PRESET key (5), and press the TX key (2). Set **AF Anl In** to SSB Demod (see Figure 24).
3. Determine if actual frequency readout or frequency error is the desired measurement. For actual frequency readout, continue with step 4. For frequency error, use the knob to set **Tune Mode** to Manual, and the knob/data entry keys to set **Tune Freq** to the expected carrier frequency.
4. Key the Transmitter.

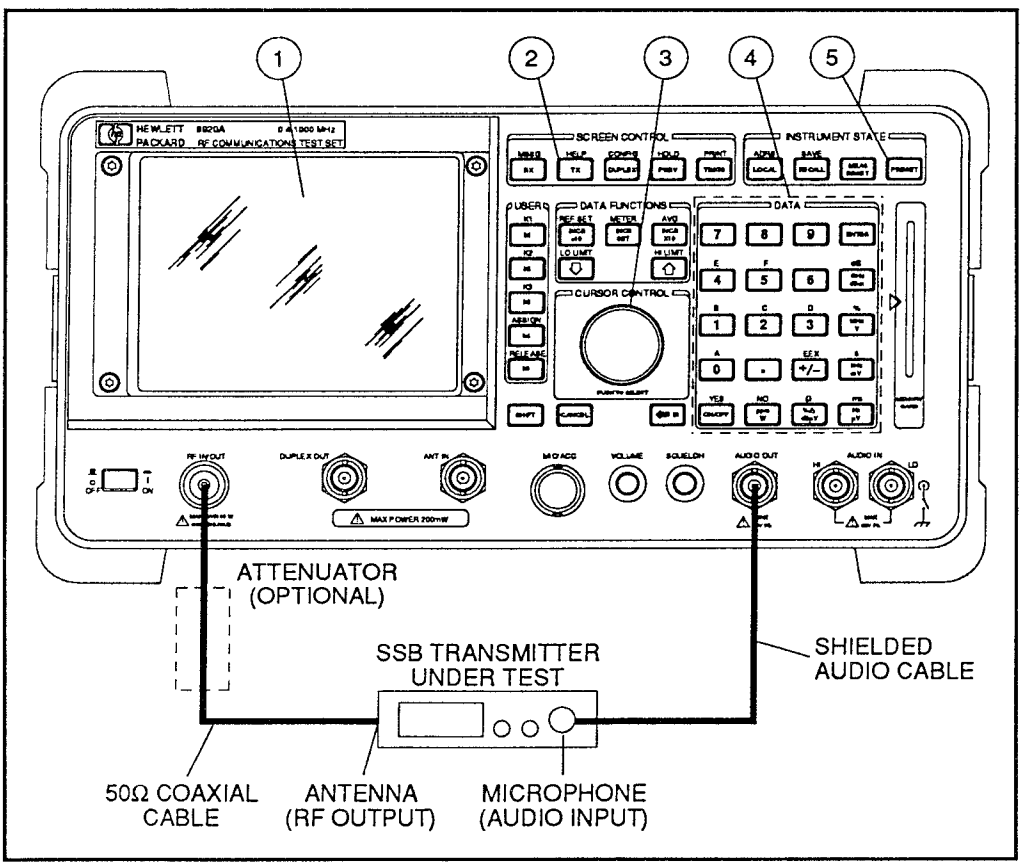

Figure 23: SSB frequency/frequency error setup

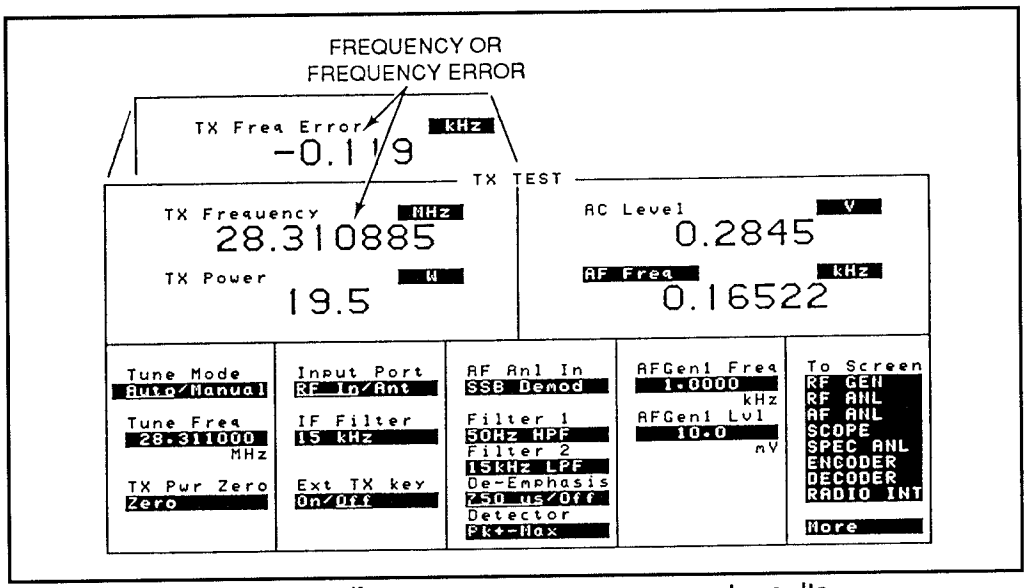

Figure 24: SSB frequency/frequency error measurement results

5. Using the knob (3) and data entry keys (4), set **AF Gen1 Lvl** until a measureable RF signal is displayed (typically > 5 to 10 mV).
6. Frequency or frequency error is displayed as shown in Figure 24. Record displayed **TX Frequency** or **TX Freq Error**; record current **AF Gen1 Freq**.
7. Unkey the transmitter.
8. Calculate the frequency or frequency error as follows:

   Frequency = **TX Frequency - AF Gen1 Freq**

   For example, 28.310885 MHz - 1 kHz = 28.309885 MHz

   Frequency Error = **TX Freq Error - AF Gen1 Freq**

   For example, -0.119 kHz - 1 kHz = -1.119 kHz

The next test is from the AM receiver measurements group.

SSB Squelch Sensitivity Measurement
This procedure measures an SSB receiver's minimum and maximum squelch sensitivity. Minimum squelch is the amount of modulated signal required to open the squelch when the control is set to minimum; maximum squelch is the amount of modulated signal required to open the squelch when the control is set to

maximum. Minimum and maximum squelch hysteresis is also measured and calculated.

Here is how you would make the measurement:

1. Connect the receiver as shown in Figure 25.
2. On the HP 8920A, press the PRESET key (5), and press the RX key (2).
3. Using the knob (3) and data entry keys (4), set **RF Gen Freq** to the receiver operating frequency. [Note: Frequency is dependent on the receiver's mode (LSB/USB) and the audio frequency used (normally 1 kHz). When setting for LSB, set **RF Gen Freq** to a setting 1 kHz less than the normal carrier frequency. For USB, set to 1 kHz higher.] Set **Amplitude** to -47 dBm (1 mV). Set **AF Gen1 To** Off. Set **Ext Load R** to the test load resistance. Set **AC Level** meter to measure watts. Set SINAD meter to measure AF Freq.
4. On the receiver, set power to *on*. Set mode to LSB or USB. If required, set frequency to the same value as step 3. Set squelch to minimum. Set RIT to

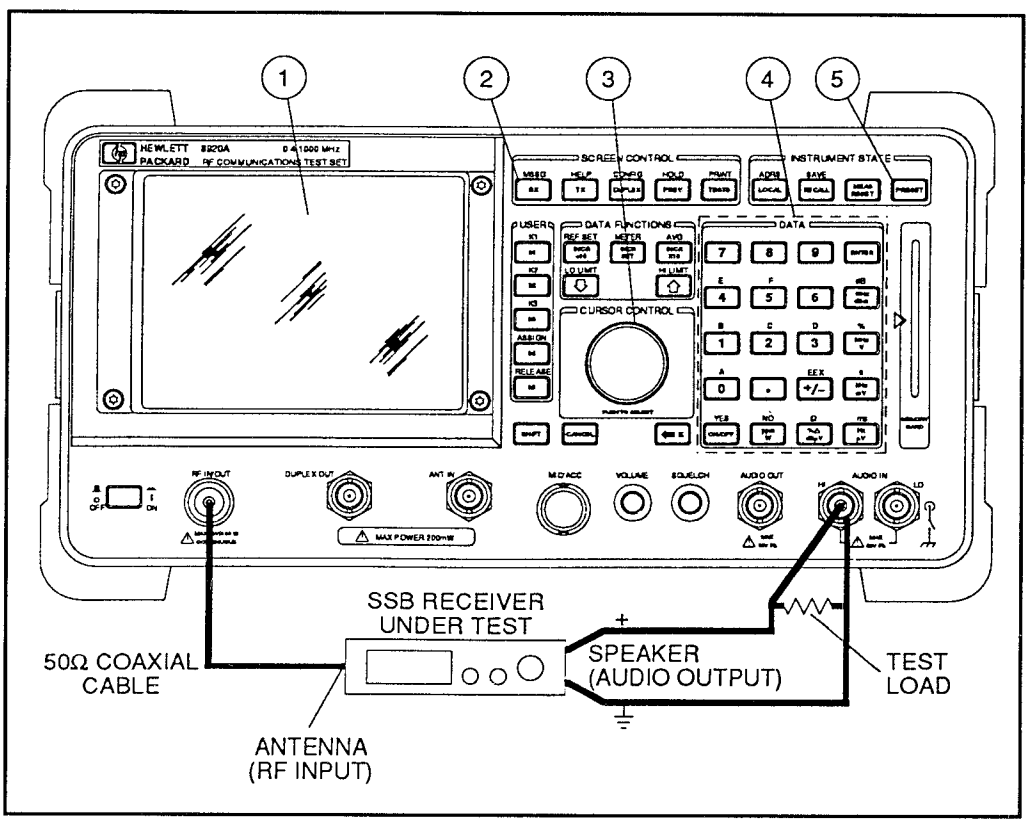

Figure 25: SSB squelch sensitivity setup

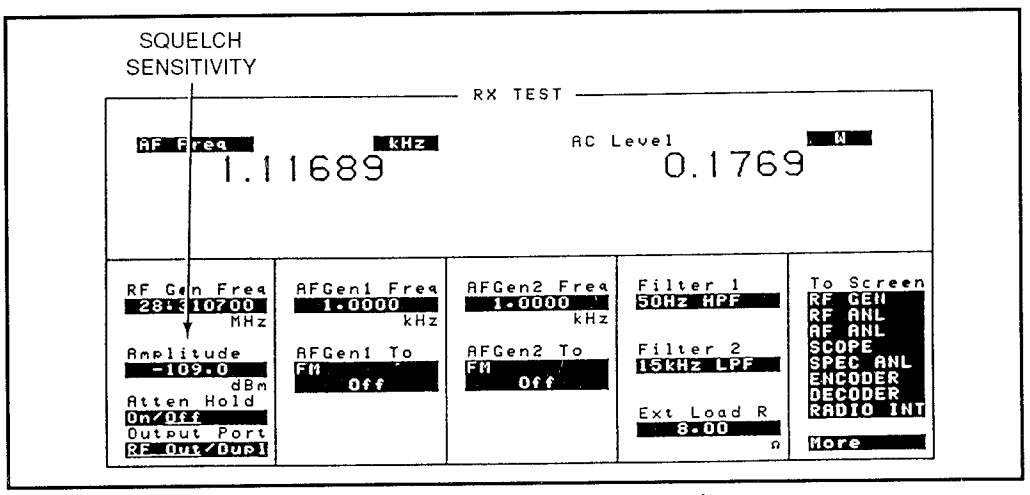

Figure 26: SSB squelch sensitivity measurement results

center or disable (if equipped). Set RF gain to maximum (if equipped).

5. On the HP 8920A, change **RF Gen Freq** until the AF Freq meter reads 1 kHz.
6. Set the receiver's volume control until the **AC Level** meter indicates the receiver's rated output power. Refer to the audio output specifications for the receiver being tested as required. If unknown, increase the volume control until the **AC Level** meter stops increasing (or is at maximum).
7. On the HP 8920A, set **Amplitude** to -137 dBm.
8. Set the receiver's squelch control until the squelch just closes.
9. On the HP 8920A, increase **Amplitude** until the receiver's squelch just opens. Minimum squelch sensitivity is displayed on the screen (1) as **Amplitude** as shown in Figure 26. Set **Amplitude** to -137 dBm and verify that squelch closes. If not, repeat steps 8 and 9.
10. On the HP 8920A, increase **Amplitude** until the receiver's squelch just opens; record this level. Decrease **Amplitude** until the receiver's squelch just closes; record this level. Minimum squelch hysteresis is the difference between the two readings.
11. Set the receiver's squelch control to maximum.
12. On the HP 8920A, increase **Amplitude** until the receiver's squelch just opens; record this level. Maximum squelch sensitivity is displayed on the screen (1) as **Amplitude** as shown in Figure 26; record this level. Decrease **Amplitude** until the receiver's squelch just closes; record this level. Maximum squelch hysteresis is the difference between the two readings.
13. After measurement, set receiver to *off*.

Using the Spectrum Analyzer

The Spectrum Analyzer can be used to measure signals from 400 kHz to 1 GHz, with variable spans from 5 kHz to 1 GHz (full span). A tunable marker is provided for automatic readout of frequency and amplitude, or relative frequency and amplitude from a reference. Other marker functions include marker to peak, marker to next peak, marker to center frequency, and marker to reference level, all of which speed up and simplify signal searching and measurement.

Inputs to the Spectrum Analyzer are connected to either the front panel RF IN/OUT or ANT IN connector, and can range from 60 W (RF IN/OUT) to 2 mV (ANT IN). All the Spectrum Analyzer functions are accessed from one of three screens:

Main Screen — Main sweep controls.
Marker Screen — Marker positioning controls.
Auxiliary Screen — input attenuation, sensitivity, and trace controls.

Here is how you would use the Spectrum Analyzer:

1. Connect the signal input to the RF IN/OUT or ANT IN connector (see Figure 27). Use the RF IN/OUT connector for measuring transmitter output or other high-power signals. Use the ANT IN connector for all other low-level signals (provides higher sensitivity).
2. On the HP 8920A, press the PRESET key (4). Use the knob (3) to select **SPEC ANL** from the **To Screen** field.
3. The Main screen controls (see Figure 28) are changed using the knob (3) and data entry keys (5) as follows:
   - From **Controls** select **RF In** if the input signal is connected to the RF IN/OUT connector, or **Ant** if the input signal is connected to the ANT IN connector.
   - **Center Freq** sets the frequency at the center of the screen.
   - **Ref Level** sets the amplitude reference level (top line of the display).
   - **Span** sets the span of frequencies displayed on the screen. (Note: Both resolution bandwidth and sweep speed are controlled by the frequency span. Resolution bandwidth used is always displayed in the upper right corner of the spectrum analyzer displayed as "BW=XXX." Sweep speed and bandwidth are always optimized for the span selected.)
   - **Marker Freq** MHz indicates the marker frequency position. **Marker Lvl** dBm indicates the marker amplitude position.
4. From **Controls**, select Main, then select Marker from the **Choices** field. The

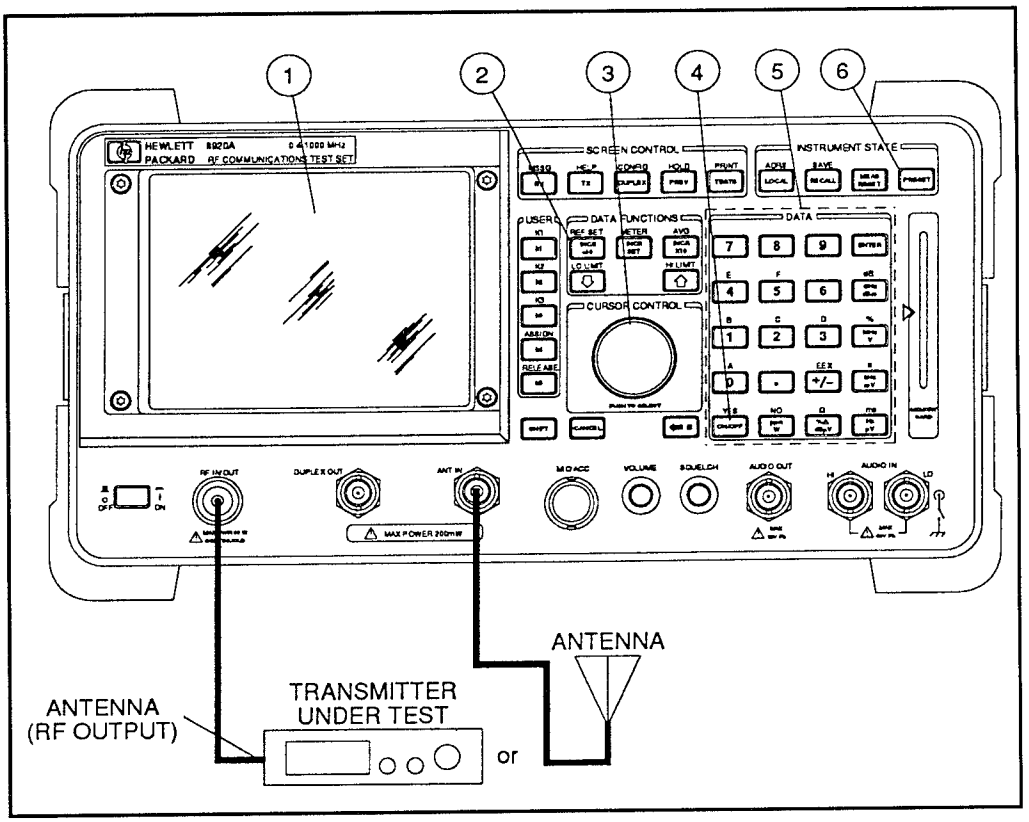

Figure 27: Using the Spectrum Analyzer

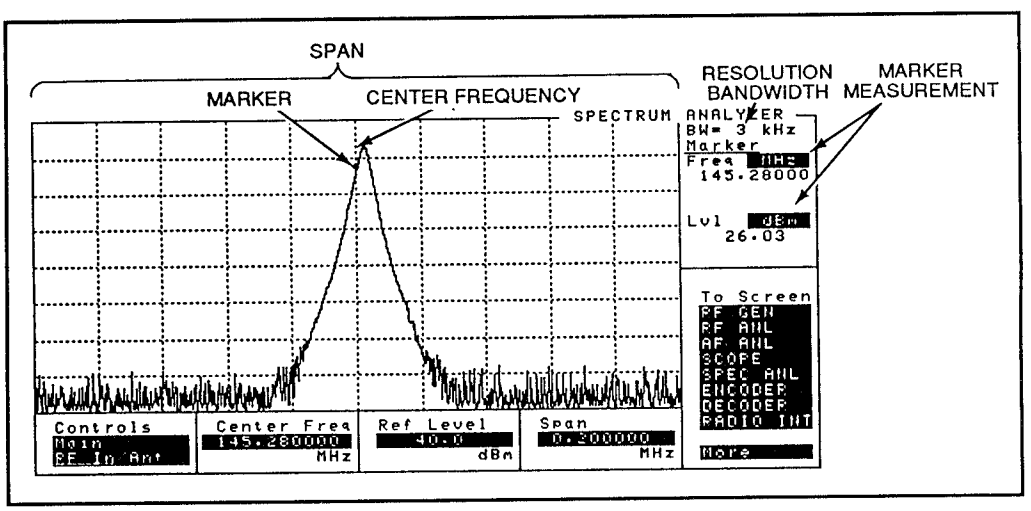

Figure 28: Spectrum Analyzer Main screen

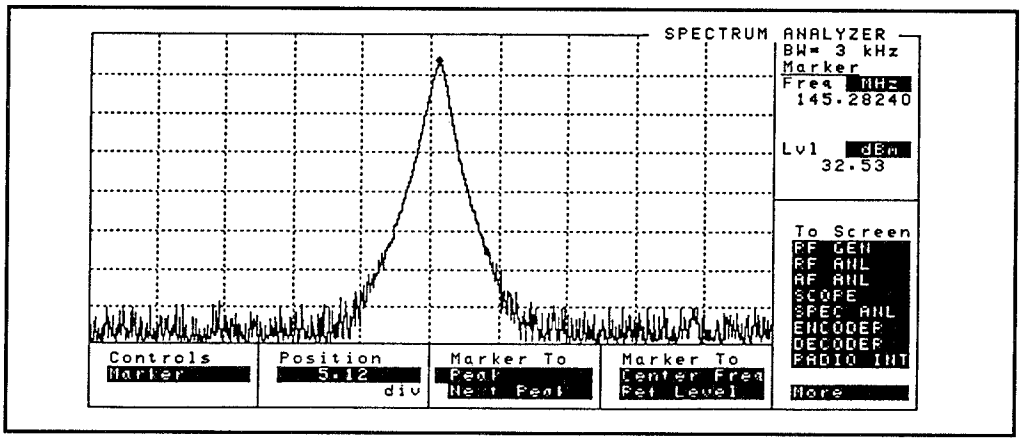

Figure 29: Spectrum Analyzer Marker screen.

Marker screen controls (see Figure 29) are changed using the knob (3) and data entry keys (5) as follows:

- **Position** positions the marker on the screen. The displayed marker, **Freq** and **Lvl** are automatically updated.
- **Marker To** sets the marker to the signal with the largest peak, the signal with the next largest peak, to the center frequency, or to the reference level. [Note: Relative frequency and amplitude measurements such as filter bandwidth, duplexer rejection/insertion loss, or harmonic level can be performed using the "delta" marker function. The delta marker function is performed by setting the marker to the first point desired and then moving the cursor to the marker frequency, amplitude readouts, or both. If you push REF SET (2), the readout displays 0 and **Ref** below it. If you move the cursor back to **Position** and move the marker along the displayed response, the marker readout displays the delta from the set reference point. To turn the reference set off, simply push the REF SET (2) and ON/OFF (4) keys.]

5. From **Controls,** select Marker, then select Auxiliary from the **Choices** field. The Auxiliary screen controls (see Figure 30) are changed using the knob (3) and data entry keys (5) as follows:
   - From **Controls** select Off to update the display after each sweep, or Pk Hold to retain the highest input value for each point in successive sweeps.
   - **Input Atten** sets the input attenuator to Automatic or Hold. If Hold is selected, a specific level can also be selected.
   - From **Sensitivity** select Normal for normal input sensitivity, or High for increased input sensitivity (< 1 mV) to locate low-level signals. Sensitivity also is used to set the vertical scale (dB/Div). (Note: Using High

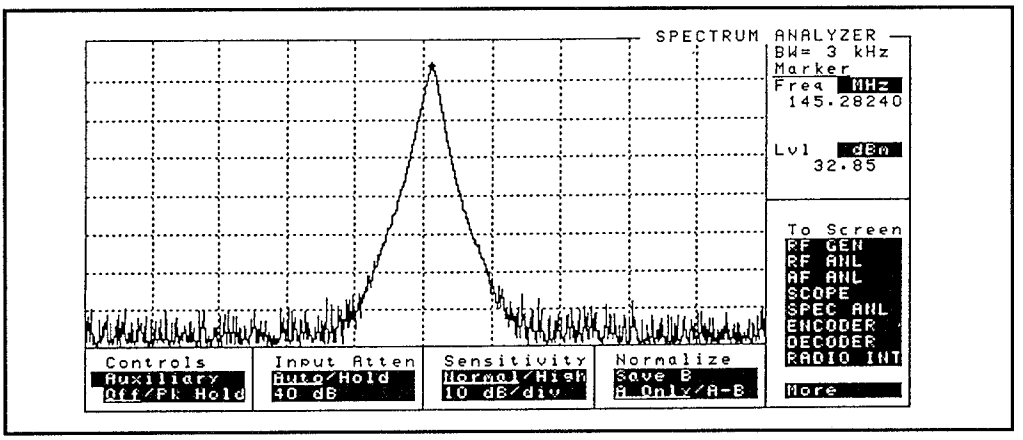

Figure 30: Spectrum Analyzer Auxiliary screen.

Sensitivity may cause erroneous amplitude or AM sideband amplitude measurements.)

- From **Normalize**, select Save B to save the current trace (can only be performed when A Only is selected); select A Only to display a continuously updated screen (normal operation); and select A-B to display the difference between the trace saved (using Save B) and the current trace.
- **Marker Freq** MHz changes the units that the marker frequency is displayed in. **Marker Lvl** dBm changes the units that the marker amplitude is displayed in.

Conclusion

The HP 8920A RF Communications Test Set is a versatile instrument, capable of making many diverse measurements. You now have a good understanding of what this instrument can do and how it operates. — *Vaughn D. Martin*

Thanks are due Max Bernard of Hewlett-Packard and HP's Liberty Lake, WA division for assistance and photos.

7/R - TR
Troubleshoooting and Repair

7/R - TR - A
An Introduction

Transmitters

Troubleshooting RF Systems

An RF transmitter—CB radio, commercial AM or FM, aircraft, marine radio telephone or ham gear—is relatively simple in design. It is invariably easier to service and quicker to diagnose than a receiver.

Watt-Meter

When testing complete RF systems (transceivers), test the transmitting sections first. Begin by using a watt-meter to measure the output.

Field-Strength Meter

Next, measure the modulation and the standing wave ratio (SWR). A field strength meter checks the transmitter for optimum efficiency. All of these meters are inexpensive. Quite often, more than one will be built into the same unit.

Standing waves on antennas and transmissions are those waves that travel out and are reflected back. For example, a cord connected to a non movable object (like a wall) with a person at the other end who then imparts a wave to the cord will have a wave reflected back that is the reverse (phase reversal) of the wave sent out.

Reflectometers

The wattmeter/SWR meter can show how an antenna is reacting. In measuring the SWR, advantage is taken of the fact that the voltage on a transmission line consists of two components traveling in opposite directions. The power going from the transmitter to the load is represented by one voltage and the power reflected from the load by the other. This is acceptable when computing the SWR. These types of circuit bridges used to measure SWR are called reflectometers. SWR meters can be designed to match the transmitter and antenna for a proper SWR.

Frequency Counters

Frequency counters work great when testing RF signals, but one must be aware that the counter can lock onto the harmonics of a signal rather than the primary signal. Stray coupling between test leads or between circuit components can cause test problems. The smallest variance of a stray reactance (i.e. a resistor wire lead can easily become a small inductor at UHF frequencies) could make high frequency (HF) measurements more exacting.

Preventing Problems

To prevent possible problems in RF testing, follow these steps:

- Calibrate RF test equipment at regular intervals using the internal calibration section (if available).
- Keep body parts away from unshielded oscillator circuits. Body capacitance can detune or reduce signal levels in an unshielded RF circuit. This may be caused by interference or improper grounding.
- Use a common ground point for all equipment: test equipment, circuits under test, etc.
- Avoid electrical noise pick-up. Electrical noise pick-up happens when leads are too long, when there is an improper power line filter, or with improper RF shielding. If radio interference is a problem, you may have to work in a shielded booth (screen room).
- Do not override the circuit under test. Use loose couplings between the circuit under test and the test instrument to prevent this problem. When a frequency counter is used with an antenna attached to it, vary the distance between the counter antenna and the circuit being tested until you have the least signal pickup possible while still being able to make a frequency count.
- Drift problems (a slow change in frequency) usually happen when testing before equipment has had a chance to warm up. Test equipment and equipment being tested need to be at the same temperature (room temperature) and stabilized before beginning troubleshooting.
- Keep all wire leads as short, straight, and as large in diameter wire as possible.

Power Supplies

Every piece of electronic equipment has a power supply of some kind. Most take the AC current and convert it to DC. Audio equipment needs "clean" DC current in order to function properly.

The purpose of a power supply in audio equipment is to create a "clean" DC voltage (or voltages). This voltage must be absent of noise spikes or hum and must be at a DC level within acceptable limits for the device being powered. When DC is not clean, audio will most often have a hum or some other kind of noise.

7/R - TR
Troubleshooting and Repair

7/R - TR - Ch
Checklist

Problems can be caused by a variety of things. This section should be valuable for most electronic receivers, transceivers, etc. Various symptoms and causes are listed below:

Antenna Related Problems

Symptom	Cause
RFI (radio frequency interference)	Arcing or poor connections anywhere in the antenna system or mearby conductors.
SWR poor	A damaged antenna element, damaged feed line, balun failure, resonant conductor near antenna, damaged matching network, damaged lead dress or poor connection at the antenna.
Balun failure	Too much SWR, weather or cold-flow damage in the coil choke, or broken wires.

Power Supply Problems

Symptom	Cause
No output voltage hum or ripplewinding	Open circuit (a fuse or transfomer is most likely bad). Faulty regulator, capacitor or rectifier, low frequency oscillation.

Amplifier Problem

Symptom	Cause
Low gain	Transistor, coupling capacitors, emitter-bypass capacitor, AGC component, alignment.

Noise Problem

Symptom	Cause
Oscillation	Dirt on variable capacitor or chassis, shorted op-amp input.
Untuned (oscillations do change with frequency)	Audio stages.
Tuned	RF, IF and mixer stages.
Squeal	Open AGC-bypass capacitor.

Noise Problems (cont'd)

Symptom	Cause
Static-like crashes	Arcing trimmer caps, poor connections.
Static in FM receivers	Faulty limiter stages, open capacitor in ratio detector, weak RF stage, weak incoming signal.
Intermittent noise	Any component or connection, band-switch contacts, variable resistors (especially in DC circuits), trimmer caps, poor antenna connections.
Distortion (continuous)	Oscillation, overload, faulty AGC, leaky transistor, open lead in tab-mount transistor, dirty variable resistor, leaky cap, leaky coupling, open bypass cap, imbalance in tuned FM detector, IF oscillations, RF feedback from cables.
Distortion (on strong signals only)	Open AGC line, open AGC diode.
Frequency change	Physical or electrical variations, broken switch, dirty or faulty trimmer cap, loose parts, poor voltage regulation, oscillator tuning.

No Signals

Symptom	Cause
All bands	Dead VFO or heterodyne oscillator.
One band	Defective crystal, oscillator out of tune, band switch bad or faulty.
No function control	Faulty switch, poor connection, defective switching diode or circuit.

Improper Dial Tracking

Symptom	Cause
Continuous errors across dial	Dial Drive.
Error grows worse along dial	Circuit adjustment.

Modulation Problems

Symptom	Cause
Arcing	Dampness, dirt, improper lead dress.
Low output	Incorrect control settings, improper carrier shift (CW signal outside of bandpass), audio oscillator failure, SWR protection circuit, transistor or tube failure.
Transmit distortion	Defective microphone, RF feedback from lead dress, modulator imbalance, bypass capacitor, improper bias, or excessive drive.
No modulation	Broken cables, open circuit in audio chain, or defective modulator.

Miscellaneous Problems

Symptom	Cause
Key clicks	Keying filter, distortion in stages after keying.
Inoperative S meter, PA noise in receiver, excessive current on receiver, or arcing in the PA tank.	Faulty relay.
Reduced signal strength on transmit and receive	IF failure.
Poor VOX operation	VOX amplifiers and diodes.
Poor VOX timing	Adjustment incorrect, component failed in VOX timing circuits or amplifiers.
VOX consistently tripped by receiver audio	Anti-VOX circuits or adjustment failure.

7/R - TR
Troubleshooting and Repair

7/R - TR - CT
Circuit Tests

Checklist

The best approach to testing receiver/transceiver circuits is signal tracing and signal injection. These methods are similar and the circuit under test determines which method is best to use.

Checking ICs in receivers/transceivers is very simple:

- the voltage is present and the IC works
- the voltage is present and the IC does not work
- the voltage is not present

In the first case, the IC is functioning and the problem is elsewhere. In the second case, replacing the suspected IC or IC circuit section is the best fix. For the third example, track the voltage backward to the power supply.

Aligning

Alignment of RF equipment does not shift suddenly. Do not assume that because a unit is working improperly it has gone out of alignment. It is most likely a circuit that has failed, not that a coil has changed in alignment. Don't start changing coil alignments (especially without the service manual) unless it has been determined that the alignment has changed. Signal tracing is the best method for determining this.

Signal Tracing

Signal tracing is the best method for detecting problems in transmitters, and in solid-state and high impedance circuits. Signal tracing transmitter circuits by diagram blocks is the best way because the necessary signals are present by design. Most signal generators cannot supply the wide range of signal levels required to test a transmitter, so the internal signals should be present.

A steady signal must be present in the circuit passband for signal tracing. An off-air signal can be used when checking receivers.

The best signal tracer is an oscilloscope. It offers high input impedance, variable sensitivity, and a constant display of the traced waveform. By using a demodulator probe you can view the modulation envelope in RF circuits. By using the inputs of a Dual-trace scope, you can view both the input and output of a circuit simultaneously.

The signal source should be set to an appropriate level and frequency. The test circuit should be turned on and the signal source output connected to the test circuit input.

Place the tracer probe at the circuit input and check to see if a signal is present. If using a scope, observe the characteristics of the signal. Move the tracer probe to the output of the next stage and observe the output.

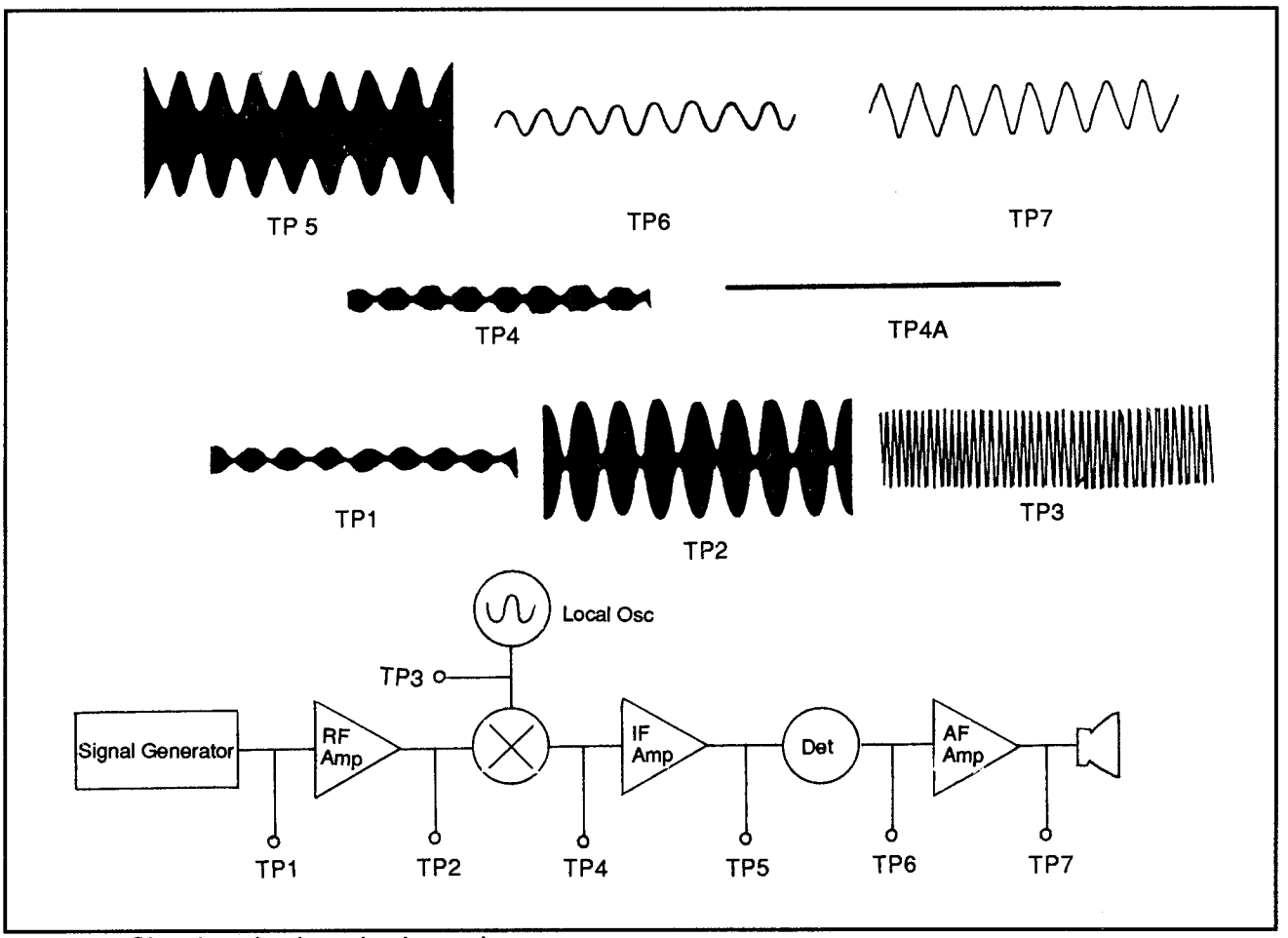

Figure 1: Signal tracing in a simple receiver

Signal levels should increase in amplifier stages and may decrease slightly in other circuits. There will be no signal output for a dead circuit. Various test points and signals found in a simple receiver are shown in Figure 1.

Signal Injection

Signal injection is more useful in some instances than signal tracing. When troubleshooting a receiver, signal injection is the better choice. A detector is already provided as part of a receiver design.

Signal injection is the better choice for vacuum tube circuits as well. Signal injection may need to be used in low impedance circuits since such circuits may not be able to produce enough signal to drive a signal tracer.

Some kind of detector circuit is required to do signal injection testing. If the circuit under test does not have a detector circuit, one must be provided. Any instrument used for signal tracing will act well as a detector circuit (remember to consider the input signal when choosing a detector).

The signal injector must must be able to supply appropriate frequencies and levels for each stage to be tested. For example, in a typical superheterodyne receiver there must be AF, IF and RF signals that vary from 6 V at AF to .2 μV at RF. Each conversion stage requires different IF from the signal source.

Test your detector first to be sure that you can pick up the signal you are looking for. It would be a waste to try signal injecting if the detector not working. Work backward from the detector circuit and inject the appropriate signal.

Continue moving to each stage input until the signal disappears. The point where the signal disappears will tell which stage is bad. Remember, the signal level injected will decrease as you digress toward the RF input. Also use suitable frequencies for each stage tested.

Mixer stages present a problem because they have two inputs: one from the RF circuit and one from the local oscillator. Either input could be the result of a problem at the detector stage. The oscillator should be checked with a scope to detect if signal oscillation is present.

Replacing a dead oscillator can clear many problems. An oscillator that is operating improperly can cause miscellaneous errors. Signal injection is not adequate to test the oscillator input to the mixer because of the many frequencies that are created simultaneously. A well shielded signal generator must be set at the level of the LO (local oscillator) frequency to ensure an accurate signal for testing.

Quick Checking

Stepping through stage by stage is not always necessary. Random checking works well, too. Instead of checking 1, then 2, then 3, etc., you might try the divide and conquer method. Check at the halfway point first. If this shows a problem, advance halfway away from the detector to see if the problem is there. If the signal was not found at the halfway point, advance halfway closer to the detector. By advancing to half the distance checked previously one can quickly locate a problem.

7/R - TR
Troubleshooting and Repair

7/R - TR - DTR
Digitally Tuned Radios

Introduction

The newest radios use digital tuning which offers the advantage of drift-free reception. Other advantages include station presets and signal-seeking tuning capability. Most often these are found in automobiles which are a good example of synthesizer radios using presets. Simply push a button and the station is recalled from memory.

A typical AM/FM stereo synthesized receiver is shown in Figure 1. The receiving end of these radios still use the superheterodyne circuitry with some modifications. Instead of using the old mechanical tuning capacitor, a set of varactor

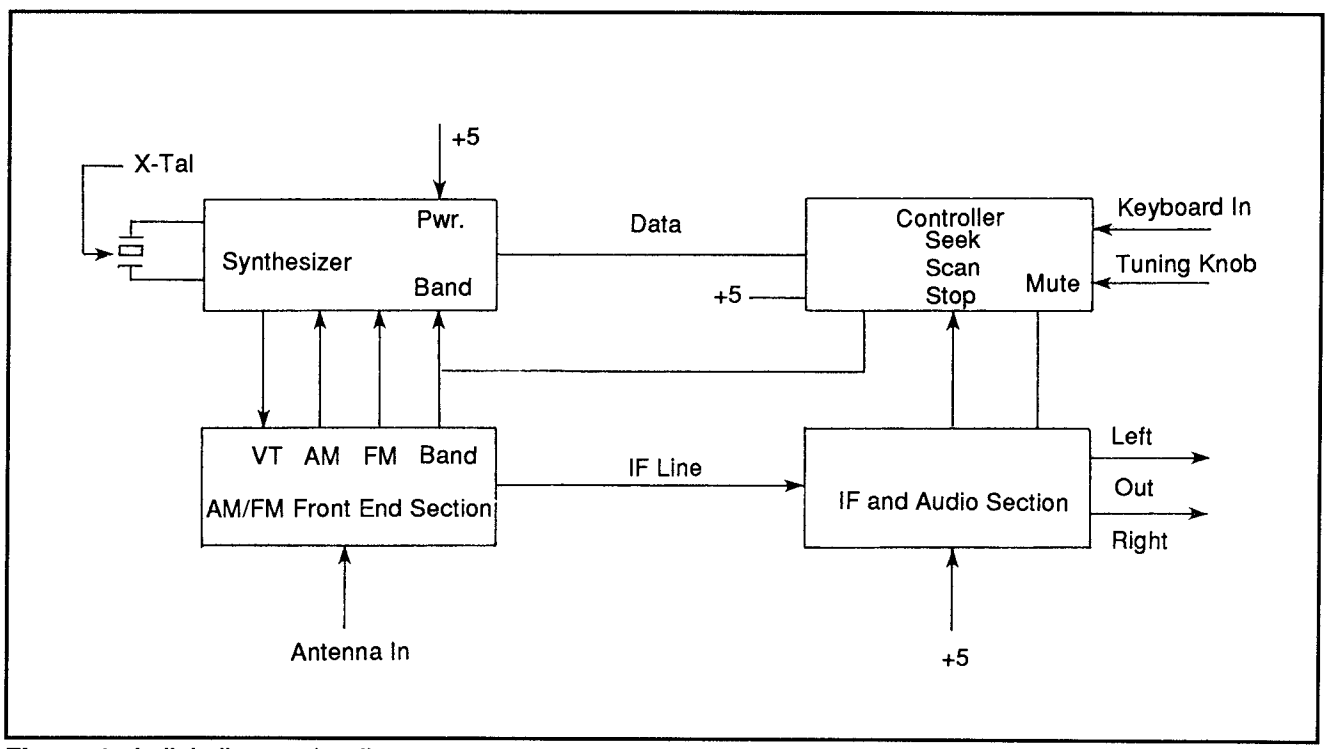

Figure 1: A digitally tuned radio

diodes control the tuning frequency. Varactors change their capacitance in direct proportion to the driving voltage.

Synthesizer

The synthesizer monitors the AM or FM local oscillator and varies the tuning voltage that drives the varactor diodes which control the receiver frequency.

Input Keypad

Digitally tuned receivers can use an input keypad which may be on the front panel or a remote and allow for the use of presets, AM/FM selections with seek-and-scan as well as other input selections. This control section tells the synthesizer what to do in relation to radio reception.

Power Supply

The power of a digitally-tuned radio usually has an input voltage regulated to 5V. There is also a memory battery or charged capacitor back-up to retain stored information in the event of power loss.

Signals

The synthesizer works closely with the AM and FM and local oscillator signals from the front end (receiving section for the AM and FM signals). After the synthesizer receives a divided-down signal from an AM or FM local oscillator, a phase detector compares it with a signal derived from a crystal oscillator whose frequency is typically at 10 kHz.

Output

The output is an analog tuning voltage that varies with the difference between the local oscillator and the crystal oscillator frequencies. The tuning voltage is adjusted to equilibrium when the two frequencies are matched and the desired frequency is tuned in. This is when the signal is locked in.

FM signals must be sent to a prescaler IC to divide the frequencies to a level the synthesizer can handle. AM signals can be handled without the need for prescaling.

Voltage

The tuning voltage for an AM signal is usually between 1.5 V (540 kHz) to 6.9 V (1600 kHz) in car radios, and may be from 3.0 to 21 V in home receivers. FM voltages are slightly lower than the AM tuning voltages.

Test Procedures

The best method for fixing a digitally tuned radio is to replace it.

However, there are some test procedures that can be done without having factory training and complete service information (although service literature is helpful).

Before digging into a receiver that seems to be malfunctioning, check all the functions first. See what works and what does not work. Then move inside and look for the obvious: blown fuses, broken or shorted wires and components, solder joints either cold or broken, etc. The problem may be as simple as a stuck keyboard (control panel) that needs a good cleaning to return the unit to operation.

The advantage of a digitally tuned radio is the limited number of ICs needed to make it work. This makes for easy troubleshooting. Also there is little that should go wrong. However, even the simplest electronic components sometimes go bad.

AM/FM Tuner

The AM and FM tuners of a digitally controlled tuner are most likely be in one IC. The AM/FM front end is good if you hear a rushing sound with the volume turned up. Verifying this can be accomplished by hooking an antenna up and listening for a station near 540 kHz for AM and 88.1 MHz for FM.

Controller

The controller of a digitally controlled tuner is either a keypad, a series of buttons on the front panel, or a remote control to change functions. Test the operation of all the key functions. If they work on the front panel, the IC controller is probably good. If one or more key functions are bad while others still work, the problem is most likely the keypad and not the IC controller. Shorting the key contacts for the bad key can confirm this.

Display

Displays of most digitally-controlled units are either LCDs or LED. Missed segments in the display probably mean there is an open connection between the display and driver. Look for, or resolder, bad connections or broken wires.

Replacement of the display generally means a complete replacement of the entire unit.

Synthesizer

The synthesizer is good if you can tune an AM or FM station. If you can't get an FM station (but can get an AM station), the problem is in the prescaler and not the synthesizer. If you can't get an AM station, check the local oscillator for output, or check the synthesizer IC itself.

Prescaler

Prescalers divide the FM local-oscillator signal by a preset value (15 or 16) and output this signal to the synthesizer for processing. Prescalers have simple checks. Either they work or they don't. An absent FM signal means the prescaler is bad and needs to be replaced.

Loop Filter

The output from the synthesizer must be filtered, and possibly scaled to suit the AM/FM front end which is done by a loop filter. The filtering system is simply a low-pass filter that removes noise pulses created by the phase detector to create a clean DC output.

Testing the function of a loop filter is easy. If you can tune the entire AM band without a whine in the sound, the loop filter is working properly.

Power Supply

The power supply of a digitally controlled tuner with problems will cause no display, and nothing else will happen. Test the power section, or substitute it to see if operation returns.

7/R - TR
Troubleshooting and Repair

7/R - TR - R
Receivers

Receivers are those devices that pick-up radio signals, process them and output them in audio format or signal to be passed to another device. Receivers are used in home stereos, automobiles, citizen band (CB) transceivers, ham transceivers, marine transceivers and more. Most are very similar in operation and require the same basic approach to troubleshooting and repairing.

Local Oscillator Checking

A DMM is all that is needed to check the local oscillator of a receiver. The oscillator generates its own signal, so a test signal is not required. The connection for testing an oscillator of a transistor-based circuit is shown in Figure 1.

The meter is connected between the emitter and the base of the circuit's transistor under test. You are looking for a reading of any kind. The value is not important, but it will be very low (only a few tenths of a volt). If the voltage is fixed, the oscillator is not operating. If it changes a few tenths of a volt as you tune, the oscillator is operating normally.

IF Amplifier Oscillation Tests

Possible symptoms of IF amplifier malfunction include a noticeable distortion in the receiver's audio output signal (especially when tuned to a weak station). In severe cases there may be a high squeal or no output signal. A DC voltmeter is used across the load resistor of the receiver's second detector.

If the receiver is not operating and you read a high DC voltage across the resistor, you can be sure there is an oscillating IF amplifier. When the receiver is operating, but has a distorted audio output, refer to the service manual or make a comparison check with a properly operating receiver of the same type and model. If the IF amp is oscillating, find a higher DC voltage at the detector output.

To make an absolute check, you measure the bandwidth of the suspected IF amplifier. If the receiver oscillates with the AGC clamp voltage removed, but stops with the clamp voltage connected, there is probably an open bypass capacitor on the AGC line. Another method for checking an IF amplifier is by

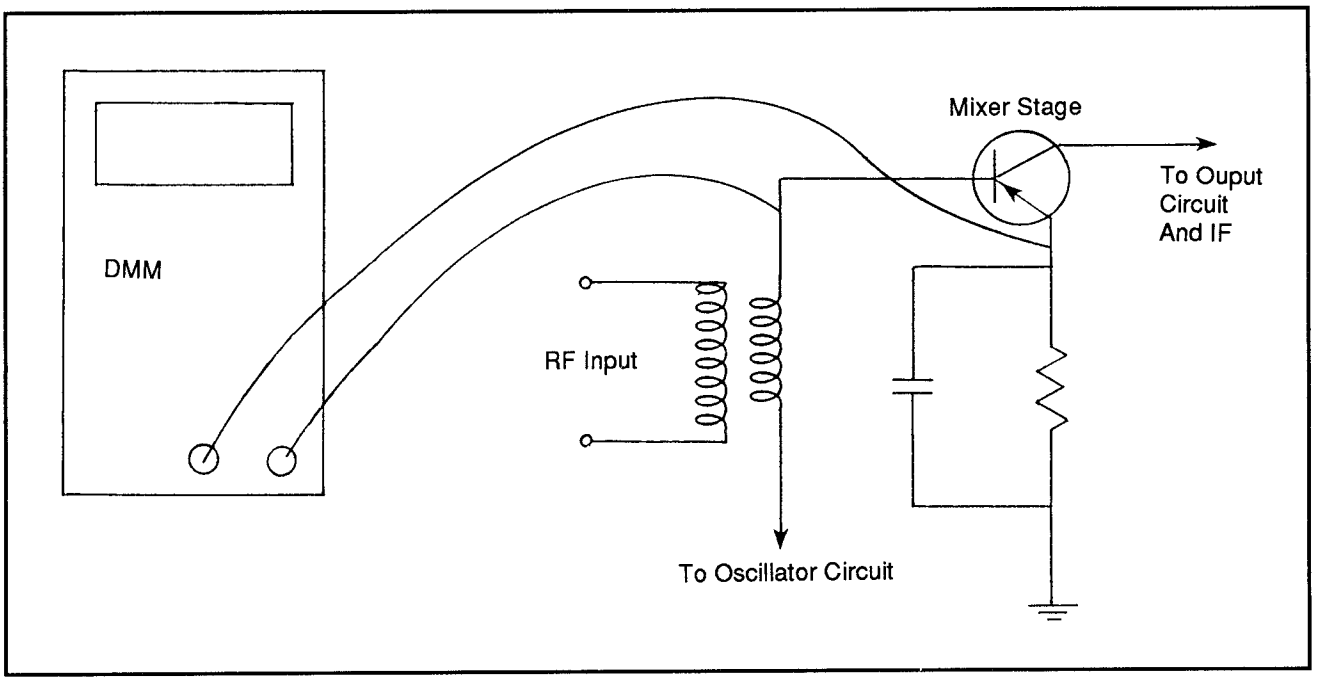

Figure 1: Transistor-based oscillator test hook-up

using an RF signal generator, a jumper lead and a variable trimmer capacitor (10 to 350 pF).

The signal generator is connected to the receiver antenna by using a few turns of wire. The signal generator should be set for about 1 MHz. Turn on the signal generator and the receiver. Adjust the receiver volume control to a tolerable level. If the IF amplifier is operating, you should hear a squeal from the receiver. If this doesn't happen, the problem may be deeper. Take the test jumper lead and short out the suspect IF transistor between its emitter and base. This cuts the transistor off by killing the forward bias. Connect the variable capacitor from the bottom of the IF amplifier output transformer to the base. These connections are shown in Figure 2.

The trimmer cap should be adjusted until you have minimum sound. If you can reduce the sound to little or none, it indicates that the IF amplifier was oscillating. This means that the neutralizing capacitor is possibly open. In this case, replace the capacitor and see if the problem is fixed.

Automatic Gain Control Tests

Connect the DMM between the AGC line and the chassis ground (or the negative supply). The AGC is a self-acting device that maintains the output of a radio

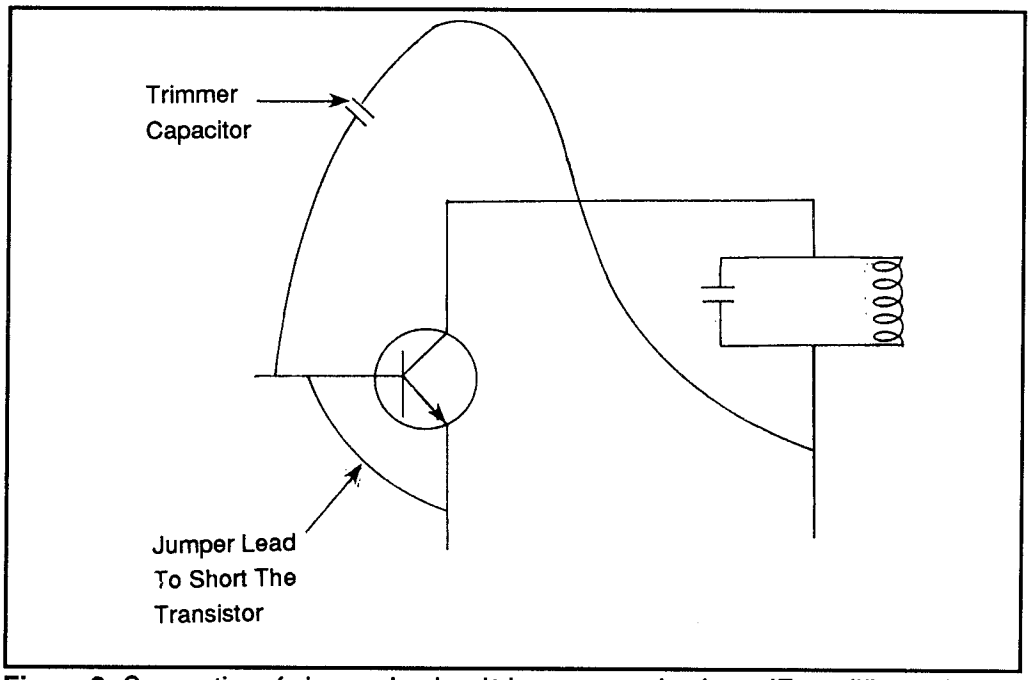

Figure 2: Connection of a jumper lead and trimmer capacitor for an IF amplifier oscillation test

receiver or amplifier at a substantially constant level (within a relatively narrow limit) while the input voltage varies over a wide range. Common AGC problems cause distortion on strong stations. (This circuit is the same as an automatic volume control circuit.)

Use the DMM in the highest DC range. For those units with a switch for turning on/off the AGC, set the switch on. Monitor the DMM and tune the receiver to various stations.

As the signal increases in strength, the gain of the controlled stage is reduced by the increasing value of bias. There should be a change in the DC voltage readings as the receiver is tuned from station to station. Also, the filter capacitor will open, causing the AGC bias voltage to follow the rise and fall of the audio envelope, and may be heard as distortion in the receiver output.

AM Receiver Tracking Test

AM receiver tracking is the ability to track when a receiver maintains a constant frequency difference throughout the receiver tuning range. Different stations vary and it is impossible to receive all with equal sensitivity. The receiver works at optimum performance when the tuning circuits track as closely as possible.

A dummy load antenna (where applicable) should be connected with a signal generator to the receiver antenna. The receiver should be set to the high end of the dial (around 1400 to 1600 kHz). The use of a fluorescent light produces static across the entire band and can be picked up no matter where you tune the dial. Maximum static should be obtained for this adjustment.

Using a weak test signal (like the fluorescent light near the receiver), adjust the oscillator, RF and antenna trimmers for the maximum output. The oscillator is usually in parallel with the oscillator tank, and the antenna trimmer in parallel with the tuned input circuit.

Tune the signal generator to 600 kHz and tune the receiver for a maximum output. Adjust the signal generator to create a weak signal level output and tune the antenna and RF slugs for maximum receiver output. Several times over are the best adjustment for optimum performance.

A quick tracking check can be done by setting the receiver to some weak station at around 600 kHz and a maximum volume. Adjust the oscillator trimmer for a maximum signal level. Next, set the receiver to a weak station somewhere in the high end of the band. The antenna trimmer should be adjusted for a maximum signal. This should be done several times. If this does not work, follow the procedure in the previous paragraphs for the tracking tests.

FM Demodulator Test

Checking FM demodulation circuits requires the use of a sweep generator and oscilloscope. The scope should be hooked across the volume control and the sweep generator signal should be interjected into the limiter when the receiver uses a discriminator, or into the last IF amplifier if it has a ratio detector.

Set the sweep generator to the receiver IF (most will be 10.7 MHz and a bandpass of 200 kHz). Check the specifications from the service manual to be sure. Disable the local oscillator by placing a jumper wire across the oscillator coil. The scope sweep should be set to 60 Hz and the sweep generator to sweep 200 kHz.

Adjust the demodulator by tuning the slug in the transformer secondary unit until the curve is equally divided on both sides of the vertical line. Adjust the primary slug until you achieve an S-shaped curve at about a 45° angle. An example of this wave is shown in Figure 3.

Adjust the horizontal sweep to 120 Hz of the scope and you should see a pattern like that of Figure 4. Next, adjust the secondary coil slug until the two crosses form a near perfect X pattern. This indicates that the demodulator is operating properly.

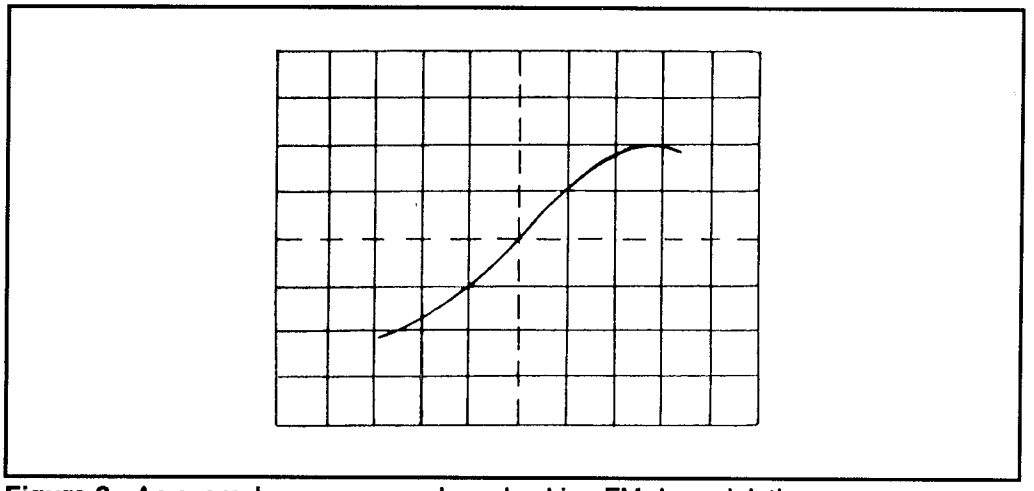

Figure 3: An example curve seen when checking FM demodulation

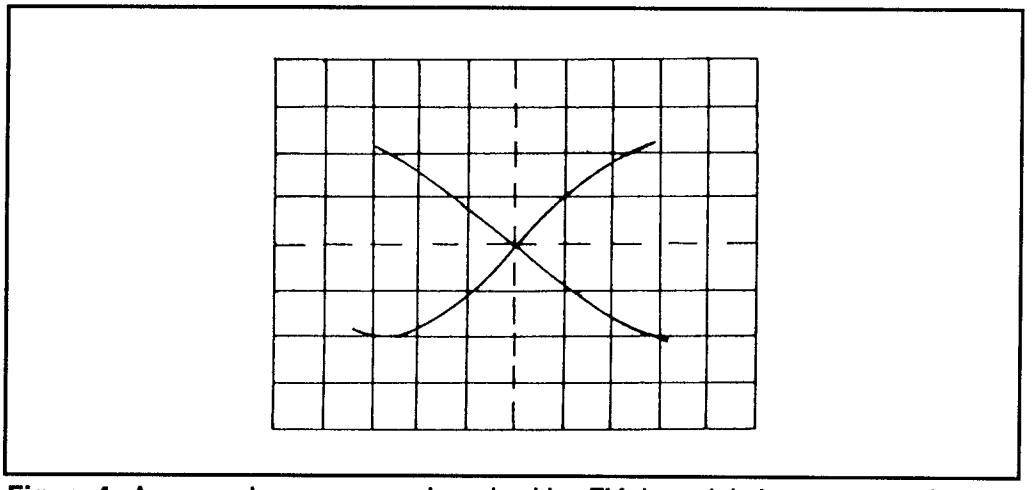

Figure 4: An example curve seen when checking FM demodulation at sweep of 120 Hz

IF Amplifier Check

This check is an IF alignment check. Use a sweep generator connected to the first IF amplifier input circuit as shown in Figure 5. The receiver oscillator should be shorted by placing a jumper across the oscillator wire. Set the sweep generator to the IF frequency (10.7 MHz, normally).

Next, set the sweep generator to the correct sweep frequency. This can be anywhere from 50 kHz to as high as 250 kHz. This information will have to come from the service manual. Cheap receivers will be near 50 kHz and very expensive receivers from 150 to 250 kHz.

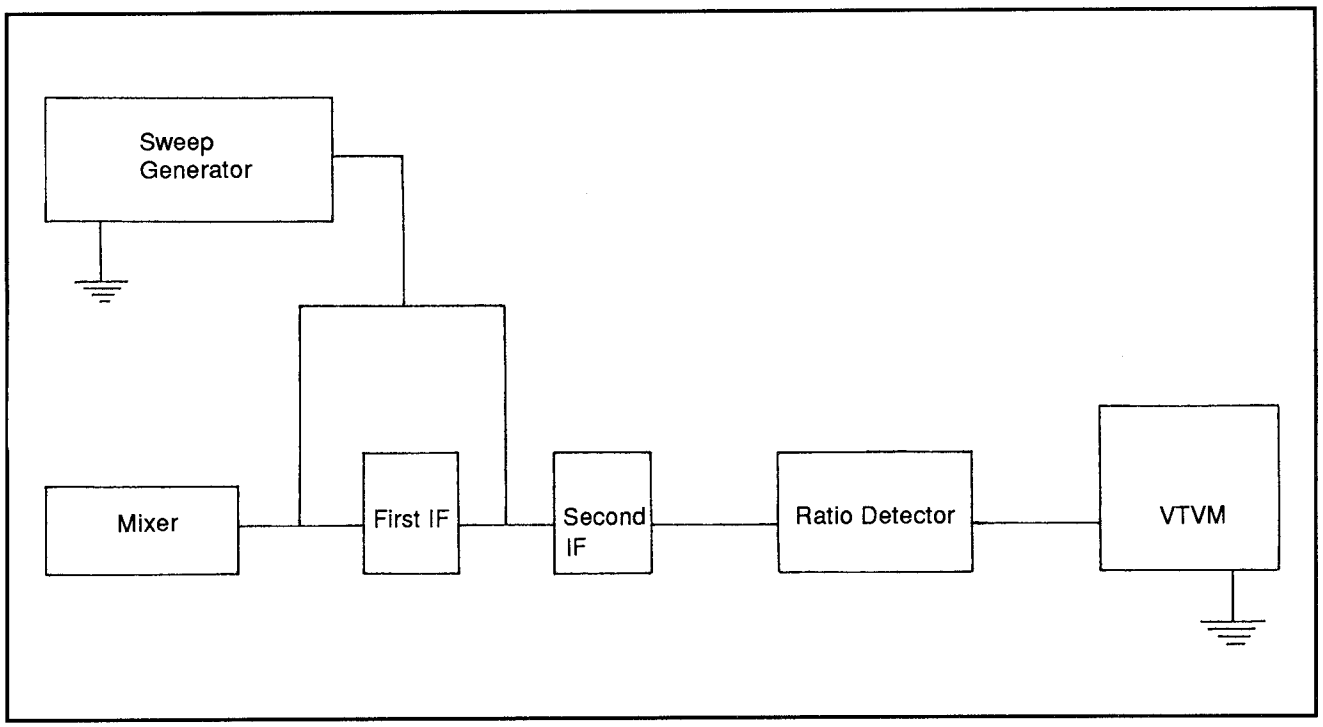

Figure 5: IF amplifier test for FM radio with ratio detector circuit

Connect the DMM across one side of the ratio detector. The output can be negative or positive (it doesn't matter which it is). Check each IF amplifier and adjust for the highest possible reading. A more sophisticated alignment is needed if you see a decent signal strength reading during this test.

Stereo Amplifier Power Output Check

Both channels' gain controls should be set for the same level. Measure the AC volts (rms) developed across each speaker voice coil with an identical signal input. This can be done with a DMM, or with a dual-trace scope which allows you to view both channels at the same time. The scope will be giving a peak-to-peak reading which must be converted to rms voltage by dividing the peak-to-peak by 2.8 before proceeding. Compute the output for each channel by the formula:

$$P = \frac{E^2}{R}$$

where R is the speaker impedance. Check the waveforms of each channel for distortion by using the scope and an identical signal sent to both channels.

Phase Lock-Loop (PLL) FM Stereo Demodulation

Many newer receivers use PLL FM stereo demodulators. These ICs require no inductors, have no oscillator adjustments and a low external part count. These can be adjusted by using the receiver alone. No other test equipment is necessary.

Tune the receiver to a stereo broadcast and adjust a variable resistor until a pilot light/LED turns on. To find the center point where the signal is locked on, rotate the potentiometer back and forth until the lamp/LED center is on. The results should be within a few dB.

7/R - TR
Troubleshooting and Repair

7/R - TR - T
Transceivers

Switching Control Problems

Transceivers use elaborate switching schemes for signal control. Many of the problems within a transceiver can be traced to relay or switching problems. A switching control problem could occur when:

- The S meter is inoperative.
- There is arcing in the tank circuit.
- Received signals are erratic or weak.
- There is PA noise in the receiver.
- The plate current is high during reception.

Some transceiver circuits are shared, and stage defects frequently affect both the receive and transmit modes.

These symptoms may vary depending on the mode selected.

Oscillator Problems

Oscillator problems usually affect both modes, but different oscillators or frequencies may be used for different emissions. Refer to the block diagram in the service manual.

VOX Control

Another potential trouble area is VOX control. The VOX-sensitivity and anti-VOX control settings should be checked if there is difficulty in VOX control.

PTT and MOX

Next, make sure the PTT and manual (MOX) transmitter controls are functioning. If these controls work, the VOX-control diodes and amplifiers should be checked. All switches, control lines and control voltages should be tested if the transmitter does not respond to other transmit controls.

VOX-sensitivity and anti-VOX settings should be checked if the transmitter switches are on in response to received audio. Check the related circuits next. A poor VOX delay adjustment will cause unacceptable VOX timing results. A bad resistor or capacitor in the timing circuits or VOX amplifiers could be at fault.

Aligning Transceivers

Do not attempt to align a transceiver without the service manual. The mixing schemes of the modern SSB transceiver are very complicated. The signal passes through many mixers, oscillators and filters. Satisfactory SSB communication requires that each stage be accurately adjusted.

7/R - VCS
Various Case Studies

7/R - VCS - PioSX2300
Pioneer SX-2300 Stereo Receiver

Repairing a Smoking Stereo

In this case study, we had to deal with a piece of stereo equipment that had been carelessly abused by its owner. When he brought the unit into the shop it was completely apart.

Worse Problems

The customer originally attempted to replace a fuse that kept blowing out. After making problems worse through his carelessness, he brought it to us. The customer commented that with power applied, he accidentally dropped the PC board on the transformer, shorting something underneath. After a quick flash, the display stopped glowing and the unit began smoking. He told us that there was no audio output, no illuminated display, and so forth.

The only thing we were sure of was that this stereo had multiple problems. Not only did we have to find out why the unit was blowing its fuse, but we also had to find out what additional damage was caused by the owner's carelessness. We already had a service manual for this unit on hand.

Repair Procedure

We began this repair by checking the fuse, inspecting the PC board for cracks, burnt components, and so forth. The top view of the stereo, with significant parts labeled, is shown in Figure 1. A quick look showed that although the main fuse was not blown it was overrated by 20 A. There also was a small piece broken off the corner of the main PC Board that needed attention. Finally, two of the four large output transistors mounted on the heat sink had holes blown in them.

Properly Rated Fuse

We replaced the main fuse with a properly rated one. Then we took a closer look at the broken corner of the PC board. The customer told us that he had forgotten to unscrew the corner screw on the PC board. As a result, he broke off the corner of the board trying to remove it. One trace was torn, but it was easily repaired

by soldering a jumper wire. Finally, we removed the large transistors along with their heat sink. A quick check with the DMM showed that the transistors were shorted.

Repair Broken Traces

Before you can troubleshoot any problems, all broken and blown traces have to be repaired. The large transistors should not be replaced at this time since the amplifier section will be the last item to be repaired.

With the large transistors removed and the new fuse installed, we plugged the unit in and watched for a reaction (we were prepared for a small fire). We made sure the power switch was in the off position at first. Then, when everything seemed okay, we turned it on.

Nothing Happened

After turning on the power, nothing happened. The unit's display did not illuminate nor was there any indication of overheating or smoke. Since nothing seemed to be working at all, the power supply bridge rectifier was the best place to start troubleshooting. We checked the physical condition of D603. If it looked

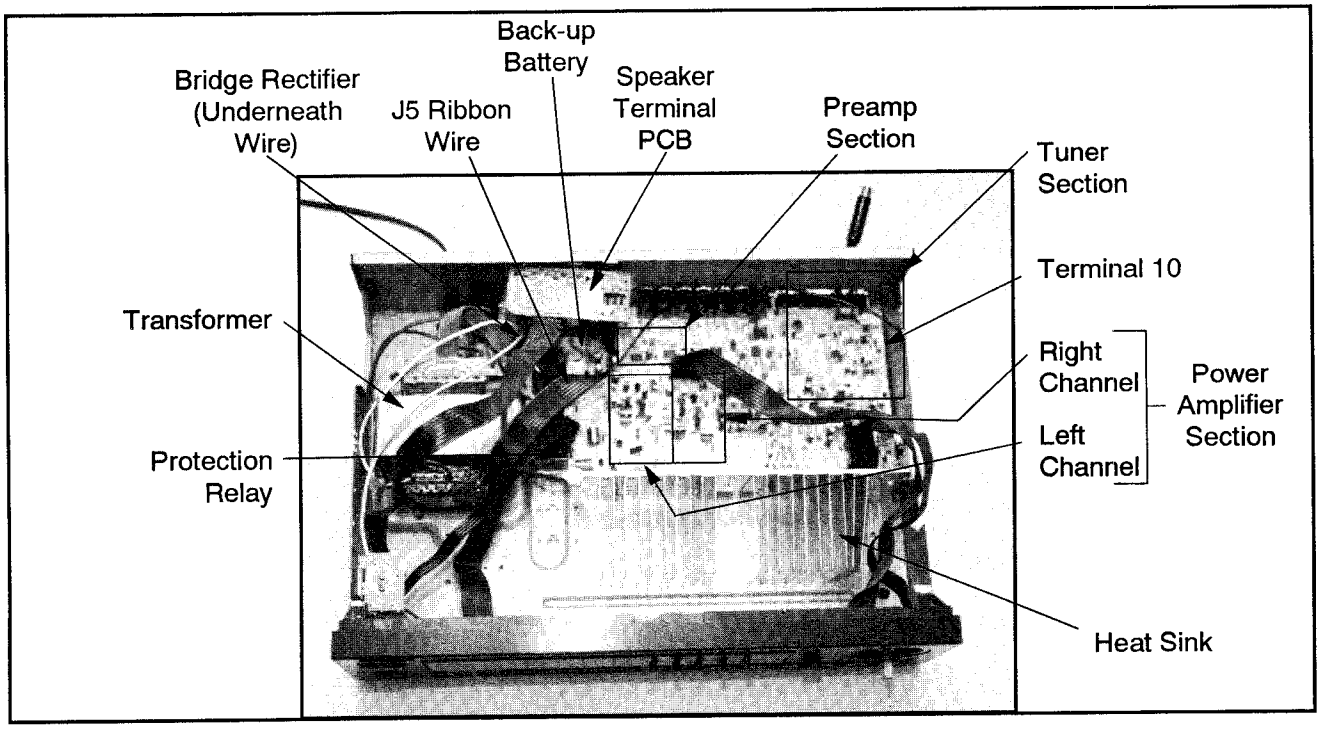

Figure 1: Top view of the Pioneer SX-2300

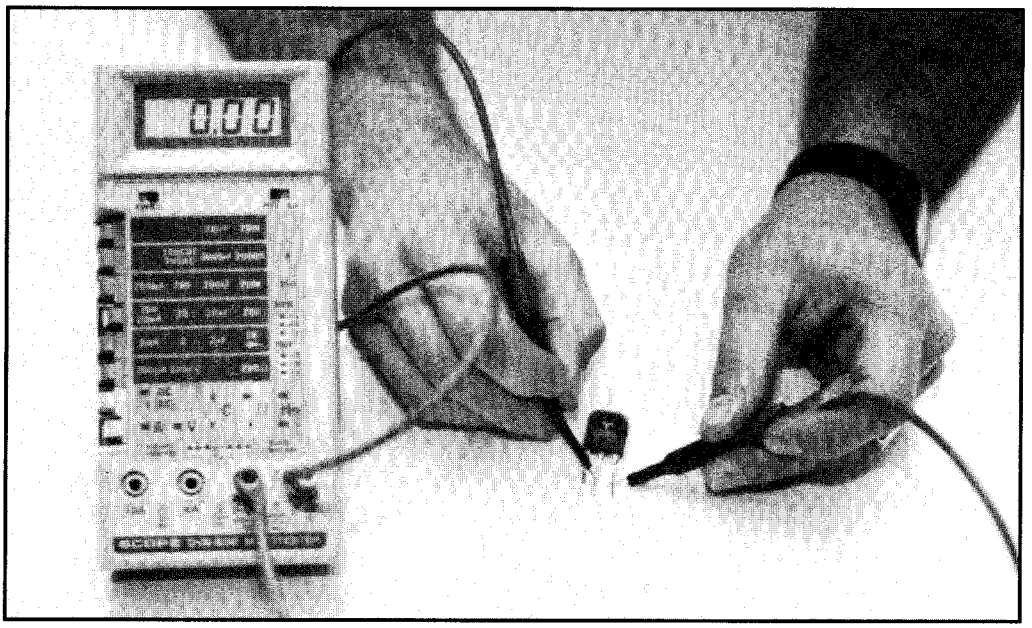

Figure 2: Testing the transistor with a DMM

okay, we would measure the voltages and compare them with the schematic. But it didn't. The bridge rectifier had a huge hole in the middle. We replaced it with an equivalent and retested. Whenever you install a new rectifier, be careful that it doesn't overheat. If it gets too hot, remove power. Since it is inconvenient to re-seat the board each time power is applied, we made sure to insulate the bottom from the chassis to prevent shorting.

Display Lit Dimly

With power applied, the display lit dimly, showing an FM station. The heat generated by the rectifier was minimal. Since the display lit dimly, we figured that the output from the bridge rectifier may be low.We checked the voltage on the DC outputs of the rectifier with a DMM, expecting it to be around ±50 VDC. The voltage measurement was well within the specs of the schematic.

Measure Voltage

Now we measured the voltage on the -27 V wire in the J5 connector. Since the rectifier was operational, the display itself must not be getting the necessary voltage. From looking at the schematic, the voltage that allows the display to illuminate brightly is this -27 V signal. The wire measured 0 V.

Next we measured the voltage on the anode of D608, the 27 V Zener diode that regulates the -27 V line. The -27 V was present. However, while inspecting the

The Pioneer SX2300 as it arrived in the shop; notice that it is already in a state of partial disassemby.

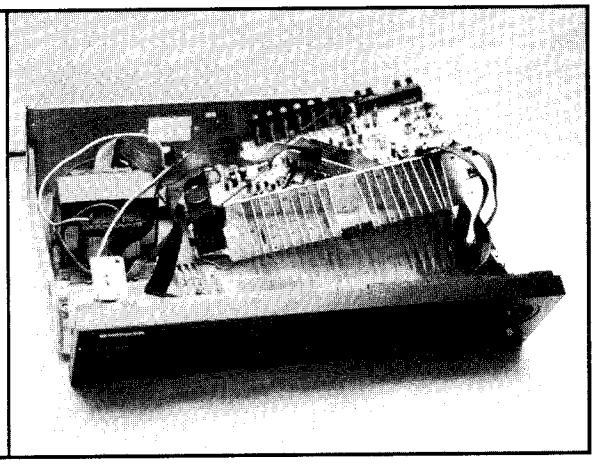

The broken off corner of the PC board with a jumper installed to replace a missing trace. Note also another jumper installed by the owner to replace a blown trace.

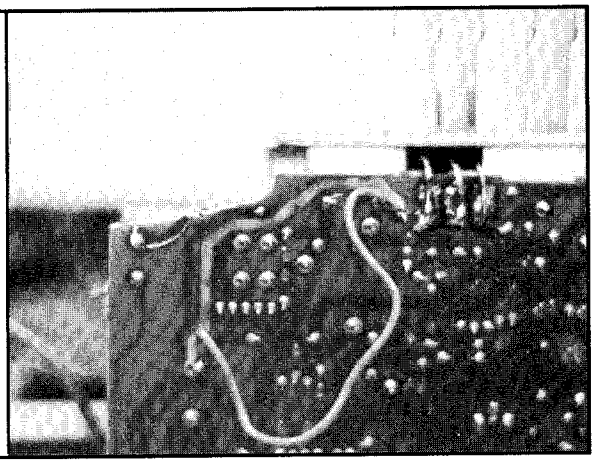

Desoldering the large power transistors.

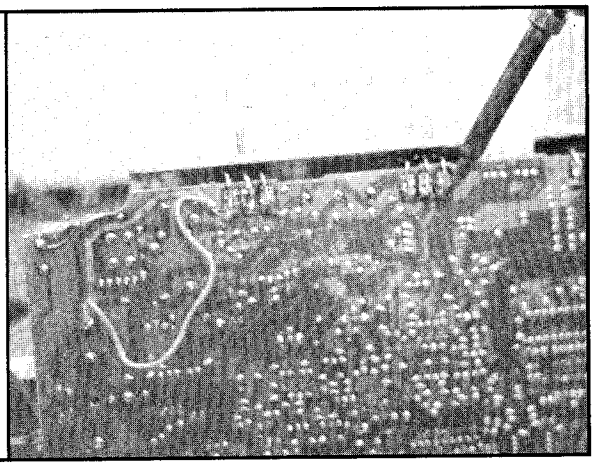

Removing the heat sink with the transistors still attached.

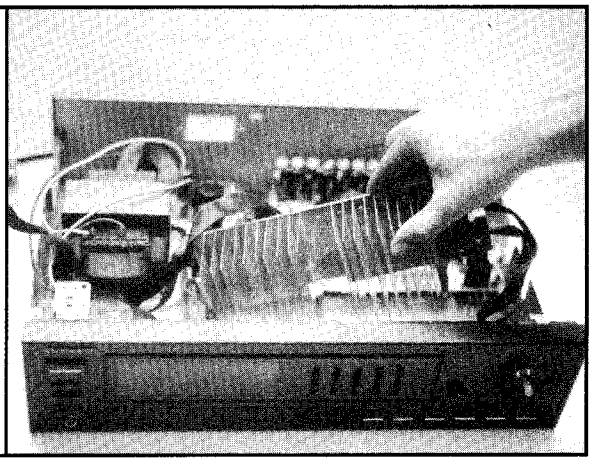

Placing an insulator between the PC board and the chassis.

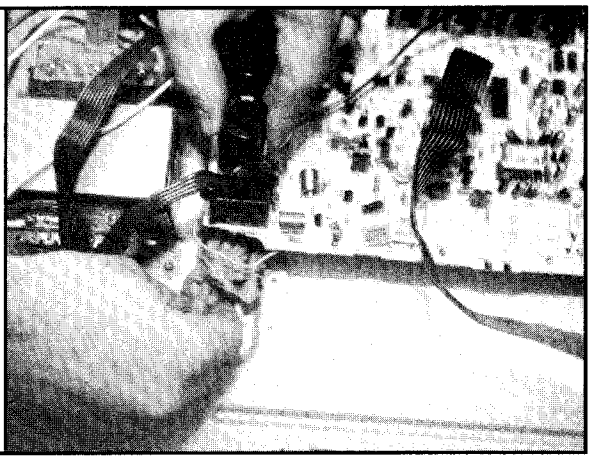

Measuring the bridge rectifier voltage.

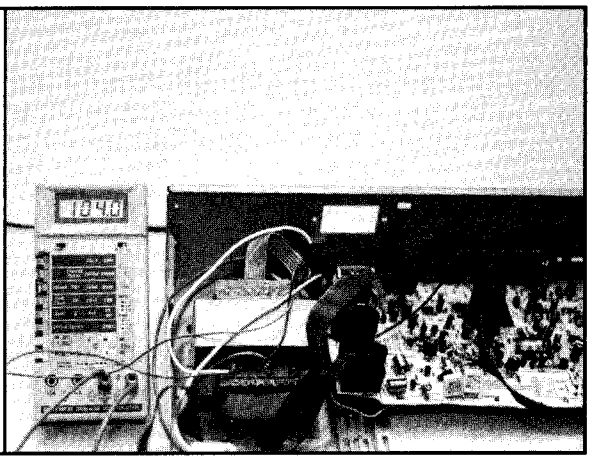

Checking the -27 V wire of the J5 ribbon cable; the low voltage reading indicates why the front display is not lighting.

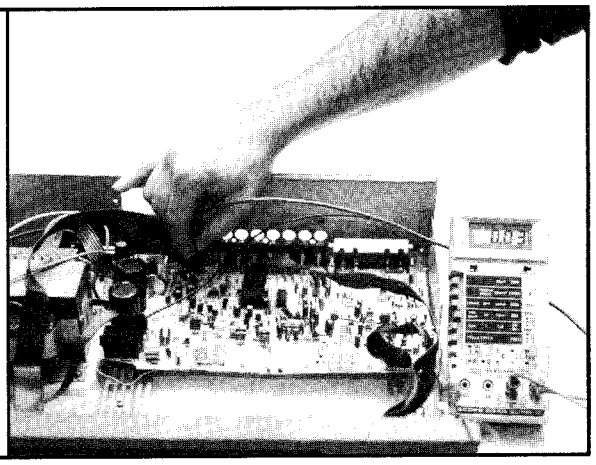

Measuring the ground pin at the AM/FM IF detector chip; the 3.3 V reading indicates why the FM stations will not tune.

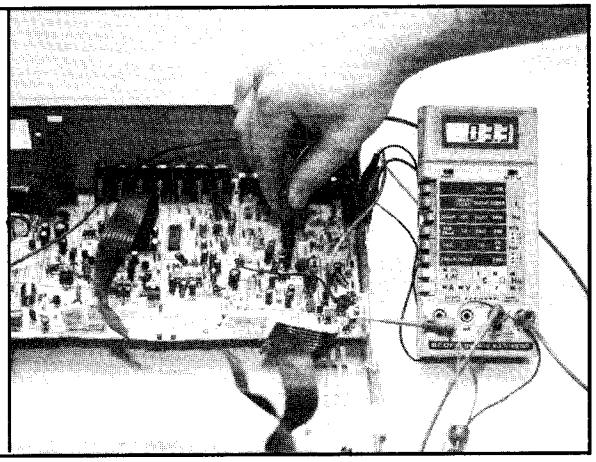

Grounding the post and the terminal by connecting each of them to the chassis.

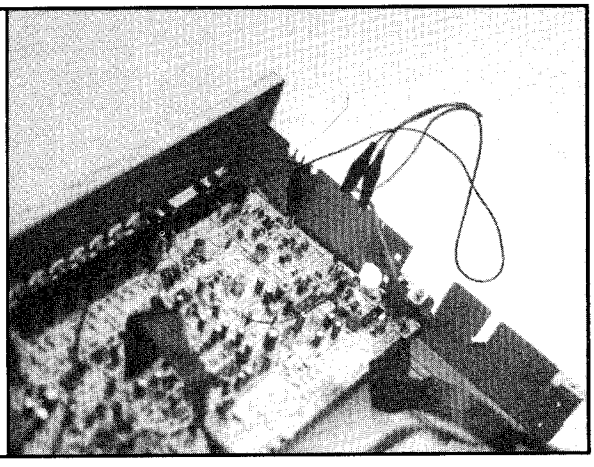

Checking for an audio signal.

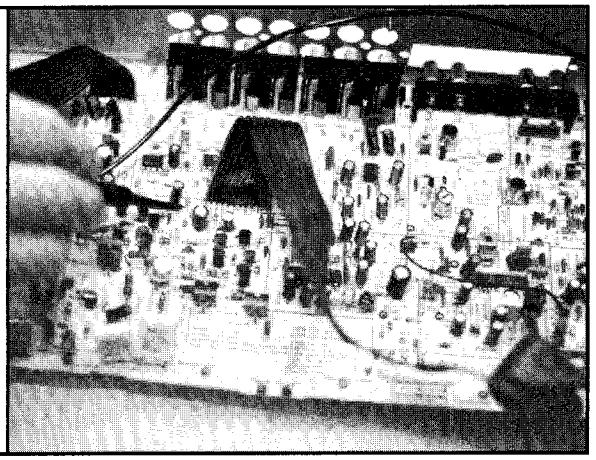

Replacing Q512 with an equivalent.

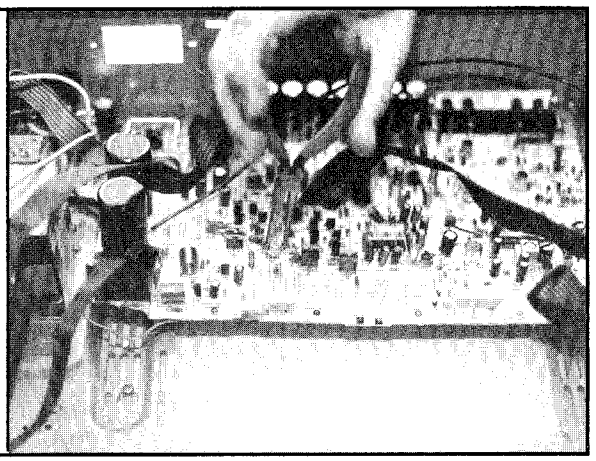

All of the defective components from this repair.

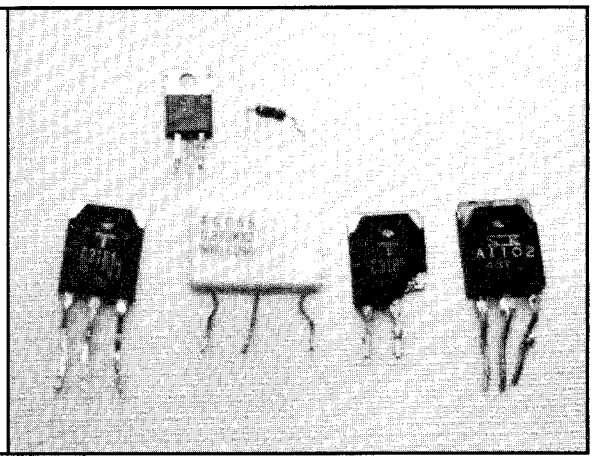

Zener diode, we noticed a blown trace in the area. This seemed to be causing the problem.

Solder Jumper

We soldered a jumper wire over the trace and reapplied power. Now we rechecked for the -27 V on the J5 connector as well as on pin 57 of IC701. We watched carefully for the Zener diode or bridge rectifier to overheat, since whatever blew the trace the first time may draw excessive current again.

With power applied, the display lit brightly and the unit responded to all the buttons on the front panel. We did not notice any signs of overheating at any component. From the looks of it, this was the part of the board that shorted against the transformer when the customer carelessly dropped the board. As expected, the -27 V was now present.

Check Preamp Signal

Now it was time move on to the original problem that the customer had complained about, the power amplifier. But before attacking the power amplifier section, you should always check for a clean preamp signal. With a high input impedance amplifier (using the RCA AUX input of a home amplifier is fine) driving a speaker, we checked for an audio signal at the R OUT and L OUT wires on the J5 connector. Looking here verifies equalizer, function switching, and preamp operation. We prefer to use an external amplifier when checking preamp signals since attaching a speaker directly may be too much of a load for the preamplifier transistors to handle. Also, the signal may be too small to be distinguished from a speaker directly. We used a CD player (any music source

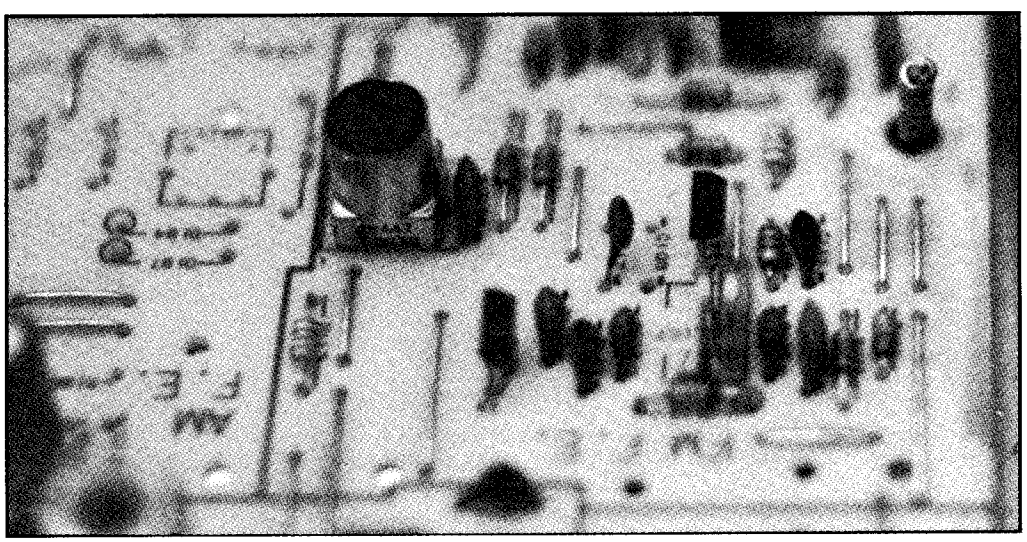

Figure 3: Closeup of Terminal 10

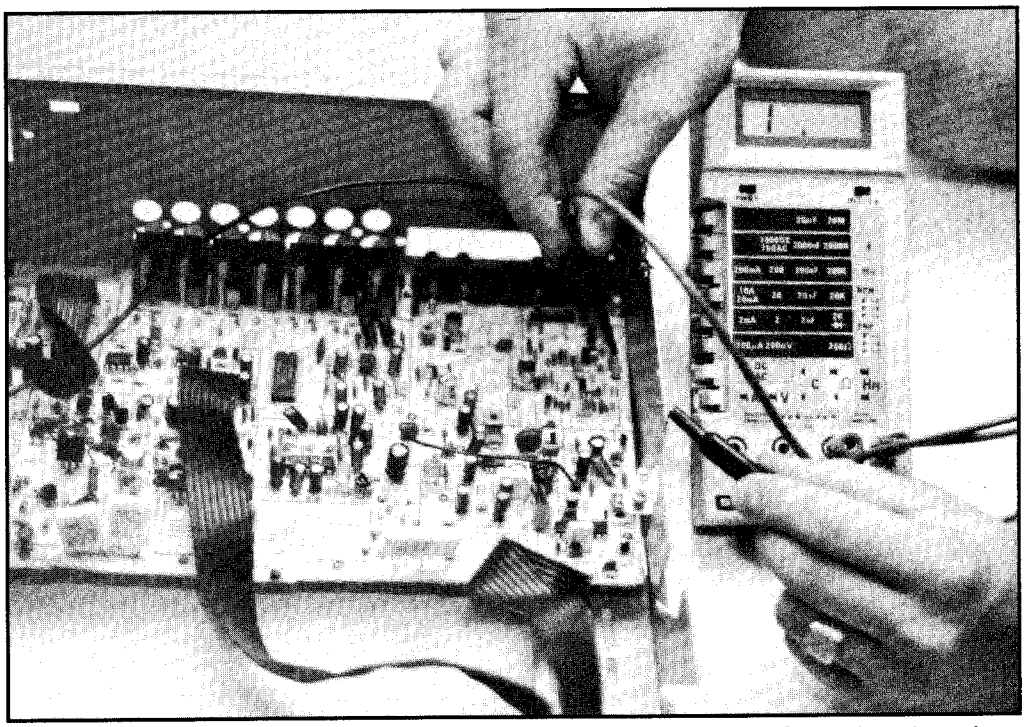

Figure 4: Using a DMM to show that Terminal 10 is isolated from the chassis

will do) connected to the RCA jacks in the back of the unit to try the various selections of inputs: CD, PHONO, and so forth.

Audio Signal Present

Surprisingly, an audio signal was there, on both channels. All modes worked except the tuner. When this mode was selected, the audio changed to a high pitched noise that did not vary regardless of what station was tuned.

We figured that something must be amiss within the FM tuner section of the circuitry. We measured all the voltages around IC101, the AM/FM IF Detector chip, and compared them to the voltages indicated on the schematic. Every voltage measured was way off, at least 5 V high. The one pin voltage that especially seemed odd was on pin 4. According to the schematic, pin 4 is connected to ground, but how can that be if it is at a 3 V potential?

Check Resistance

We decided to remove power and check the resistance from pin 4 of IC101 to another ground source, such as the chassis. We suspected that a trace had blown, which would yield a floating ground on this chip, among other things. At first, the resistance was pretty low, in the 1 KΩ range, but quickly went to infinity. This

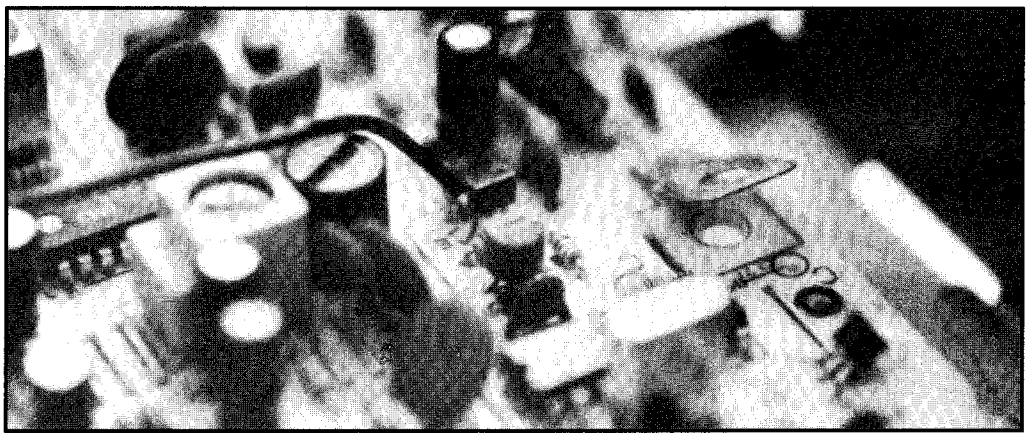

Figure 5: Closeup of the metal tab that requires grounding

told us that the ground pin was isolated from the chassis. The initial resistance was actually some capacitors charging with the voltage produced by the DMM.

Isolated Terminal

A little thinking and some luck led us to the problem, just by inspection. In this unit there is a terminal marked "10" near the corner of the PC board that originally had a piece of wire wrap wire coiled around and cut at the top (see Figure 3). This wire was missing. The terminal is represented on the schematic in the upper left corner, directly above the antenna inputs. A quick check with the DMM showed that this terminal was isolated from ground (see Figure 5). We also noticed another possible floating ground on the board, a few inches down from terminal 10. What made us notice was how this metal tab protrudes from under the board, ready to be screwed into the chassis (see Figure 4). A test showed that this terminal was also isolated from ground.

We soldered a wire from ground to this terminal as well as connected a jumper from the chassis to the metal tab. Then we reattached the preamp and listened to the output in tuner mode. Sure enough, the radio worked fine. It tuned all FM and AM stations. But if the ground was removed from the terminal or the tab, the output returned the noise. A problem like this can drive a repair person crazy, searching for defective circuitry that really isn't there.

Check Audio Signal

Now we checked for an audio signal on R560. It was present, so we checked the bases of Q501 and Q502 with the high impedance amplifier for clean preamp signals. As before, prior to troubleshooting the power amplifier, we wanted to make sure a good signal was at the input to the power amplifier section. Transistors Q501 and Q502 are the first stages of the power amplifier. A nice

strong signal was present on both bases of the transistors. This meant that any further problems with audio amplification were probably within the power amplifier.

Blown Transistors

Now that we were moving on to the amplifier section, some preliminary checks were in order. Whenever troubleshooting a push-pull design such as this, you should look closely at all the transistors in question. Since the unit came into the shop with Q2 and Q4 blown to pieces, something must be wrong with the right channel circuitry. If the final stage transistors are blown, the previous push-pull stage is probably blown too.

We took a close look at the amplifier section of the unit — component side and foil side. We removed and tested Q509 through Q512. We looked for any charred resistors, and pushed on the diodes with a pen to see if they would crack. Sure enough, Q512, the PNP push-pull transistor in the right channel was shorted from collector to emitter. Also, we noticed that R528 was burnt severely.

Replace Resistor and Transistor

We replaced R528 with another 100 Ω resistor and replaced Q512. Then we checked the condition of R534, the dual sand power resistor. Usually, when the output resistor of the first stage blows open, it means that the output resistor of the second stage is open.

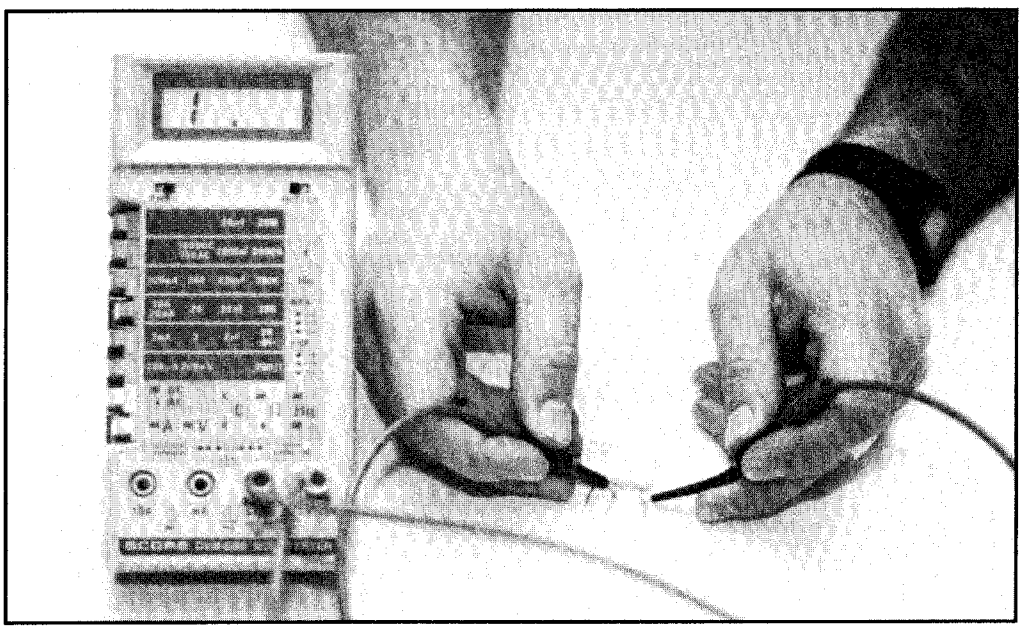

Figure 6: Using a DMM to show an open on R534

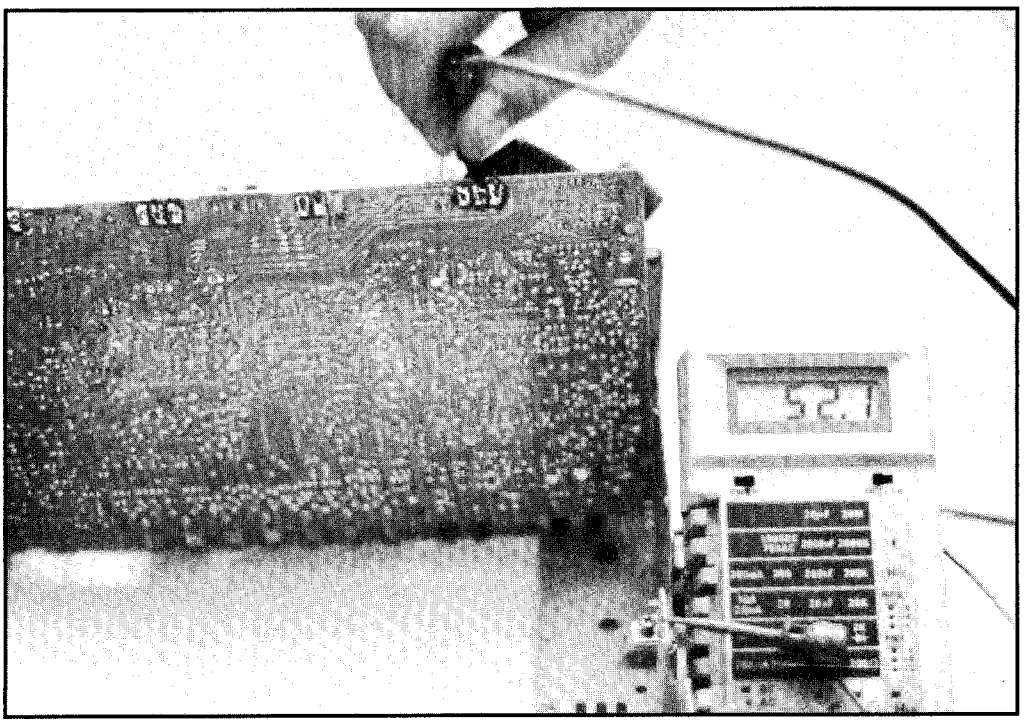

Figure 7: Verifying proper collector voltage before replacing the power transistors

A quick check with the DMM showed one resistor in the dual package was open (see Figure 6). The whole package was replaced with an equivalent by tying two individual 0.33 Ω resistors together. Be sure to use two resistors with very close values so proper balance is maintained in the circuit.

Check Pad Voltages

With power applied to the unit, we now checked the voltages on the collector pads of the four large transistors (see Figure 7). Keep in mind that the transistors are still removed at this point. The voltages were all within spec, ±50 V, so we reinstalled the transistors with equivalents. We made sure to mount them properly to the heat sink using mylar insulators.

Also, we constantly monitored the temperature of the transistors and bridge rectifier. Be careful when checking the temperatures of Q509 through Q512 with your fingers. Don't touch the casings of two transistors at the same time! The metal part of these semiconductor packages are attached to the collector leads. A quick look at the schematic shows that one collector has -50 V, the other has +50 V. Therefore, a 100 V potential is developed from collector to collector.

Measure Speaker Output Voltages

Now we measured the speaker output voltages with a DMM, and since no voltage was present, we attached a speaker and listened to the output. Everything seemed to be working now. It was time to perform the final test, installing the large transistors. We did this and the unit worked great. A clean audio signal was produced on both channels.

We played the stereo for an hour at very high volume and monitored temperatures. We experimented with all inputs, including the tuner, kept switching modes, looking for anything unusual. Everything worked fine.

Conclusion

When beginning a repair like this, it is tough to decide where to start. A good method of attack when faced with multiple problems is to work on the power supply first, then obtain a good preamp signal, and then repair the power amplifier.

We can only assume that the original problem was the amplifier. The customer probably shorted the speaker terminals while it was playing loudly and, therefore, blew the output transistors. The unit kept blowing fuses at this point since the shorted transistors were drawing excessive current. All other problems were customer induced.

Floating Ground

An important lesson to learn from this repair involves the floating ground. Whenever disassembling a unit, don't detach ground wires. Also, when removing PC boards, pay close attention to the screws that secure the board to the chassis. Often, PC boards connect to ground paths through mounting screws.
— *Dana DeMeo*

Problem: Repairing a smoking stereo.

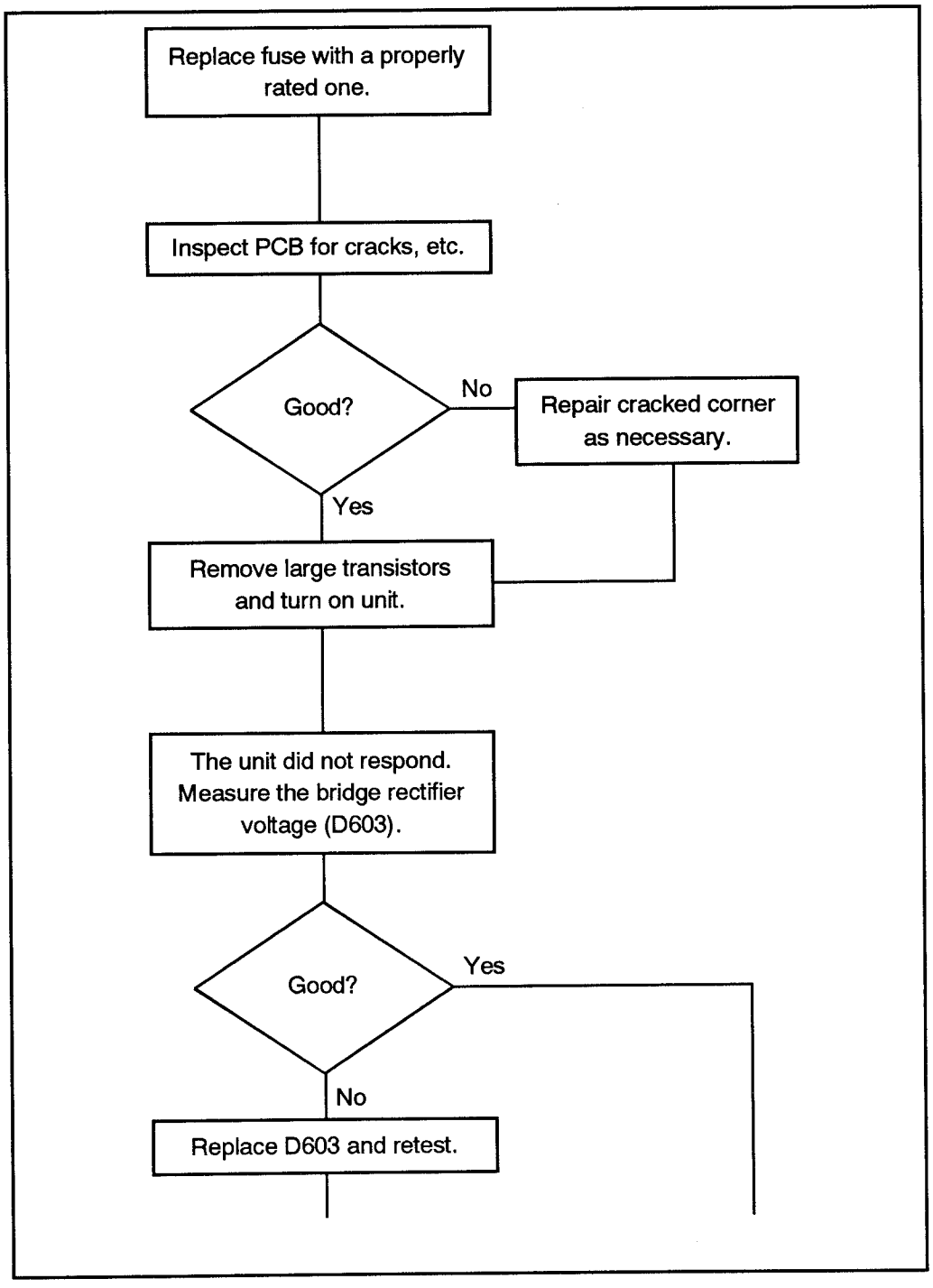

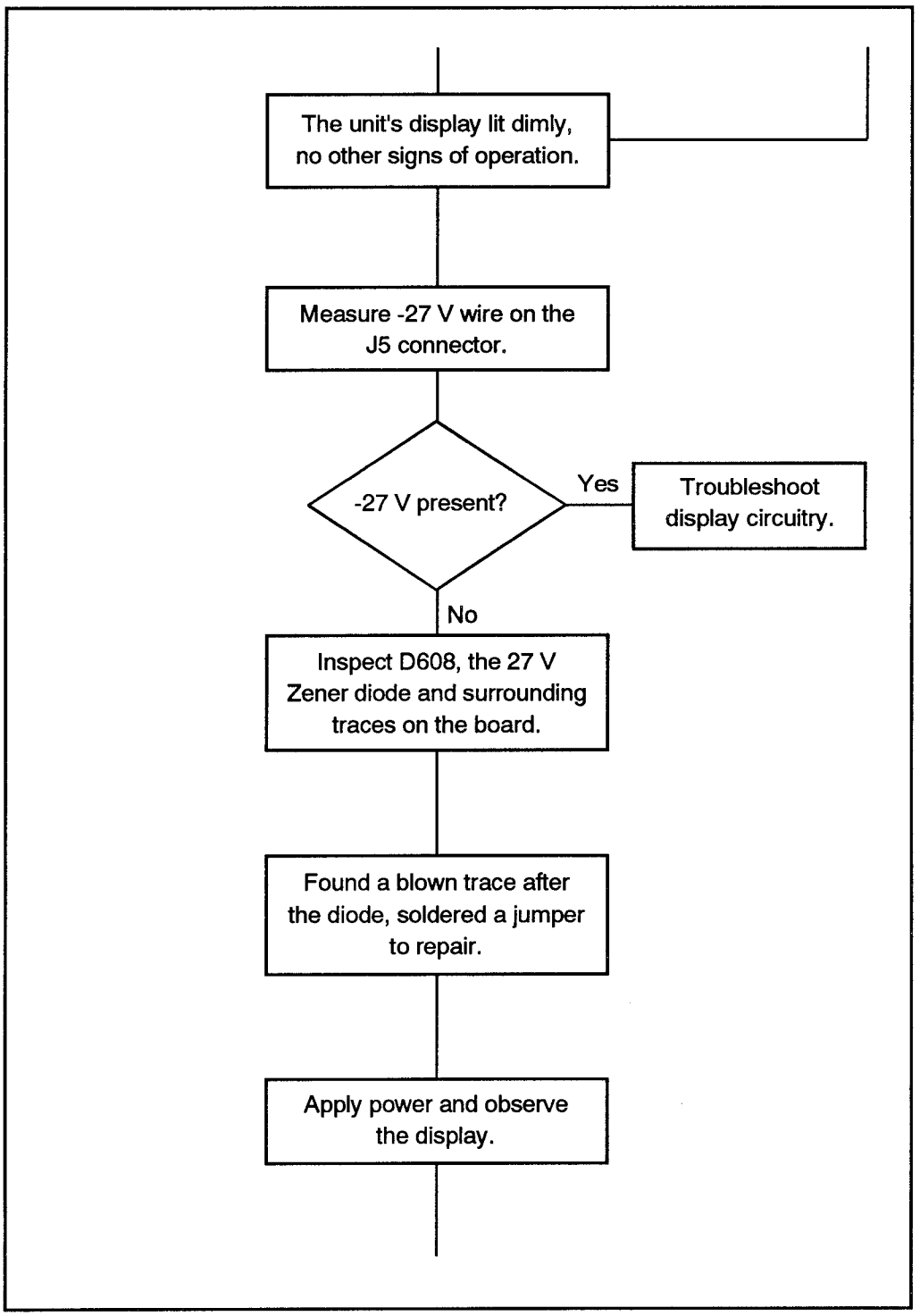
The unit's display lit dimly, no other signs of operation.
Measure -27 V wire on the J5 connector.
-27 V present?
Yes
Troubleshoot display circuitry.
No
Inspect D608, the 27 V Zener diode and surrounding traces on the board.
Found a blown trace after the diode, soldered a jumper to repair.
Apply power and observe the display.

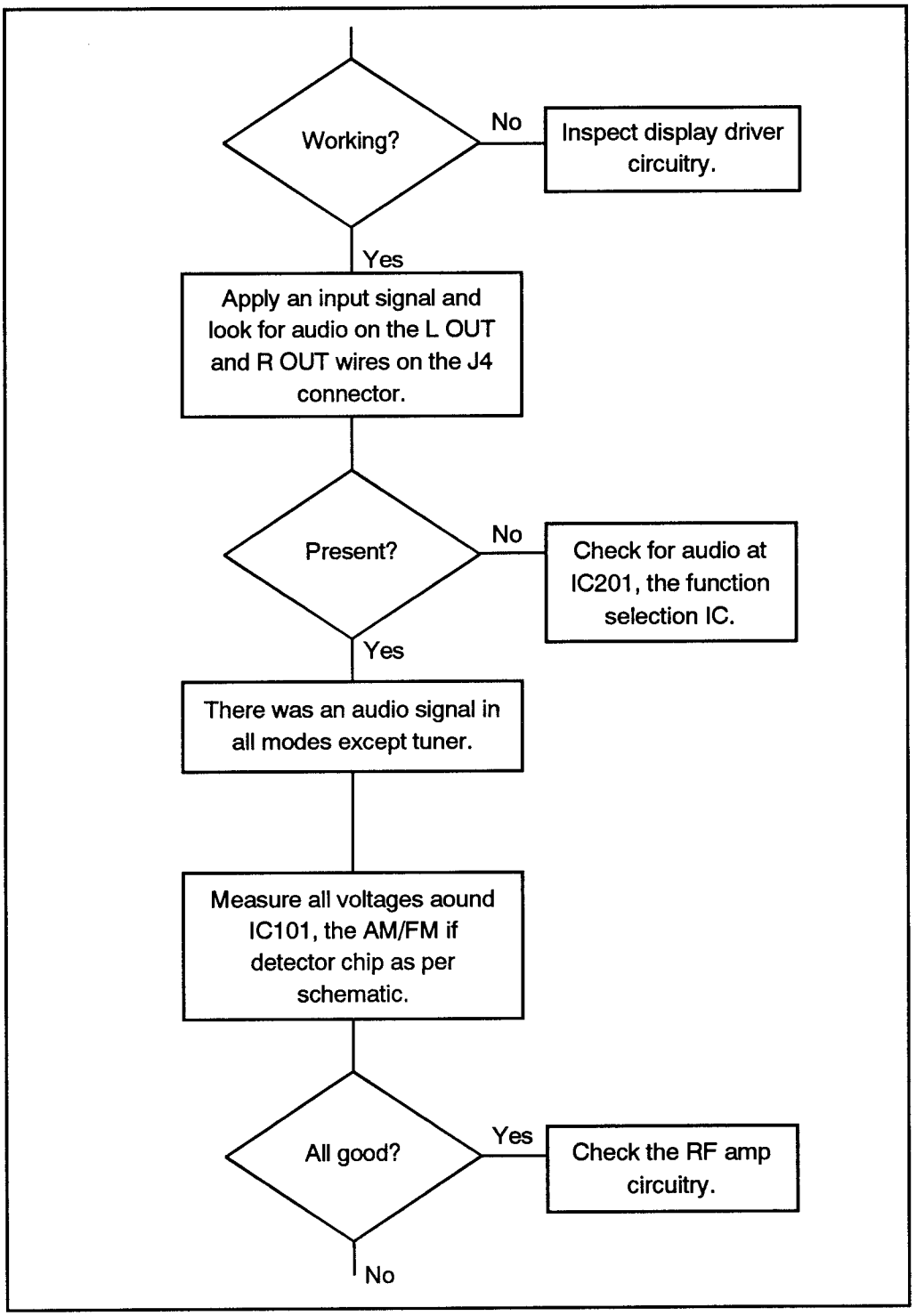
Working?
No
Inspect display driver circuitry.
Yes
Apply an input signal and look for audio on the L OUT and R OUT wires on the J4 connector.
Present?
No
Check for audio at IC201, the function selection IC.
Yes
There was an audio signal in all modes except tuner.
Measure all voltages aound IC101, the AM/FM if detector chip as per schematic.
All good?
Yes
Check the RF amp circuitry.
No

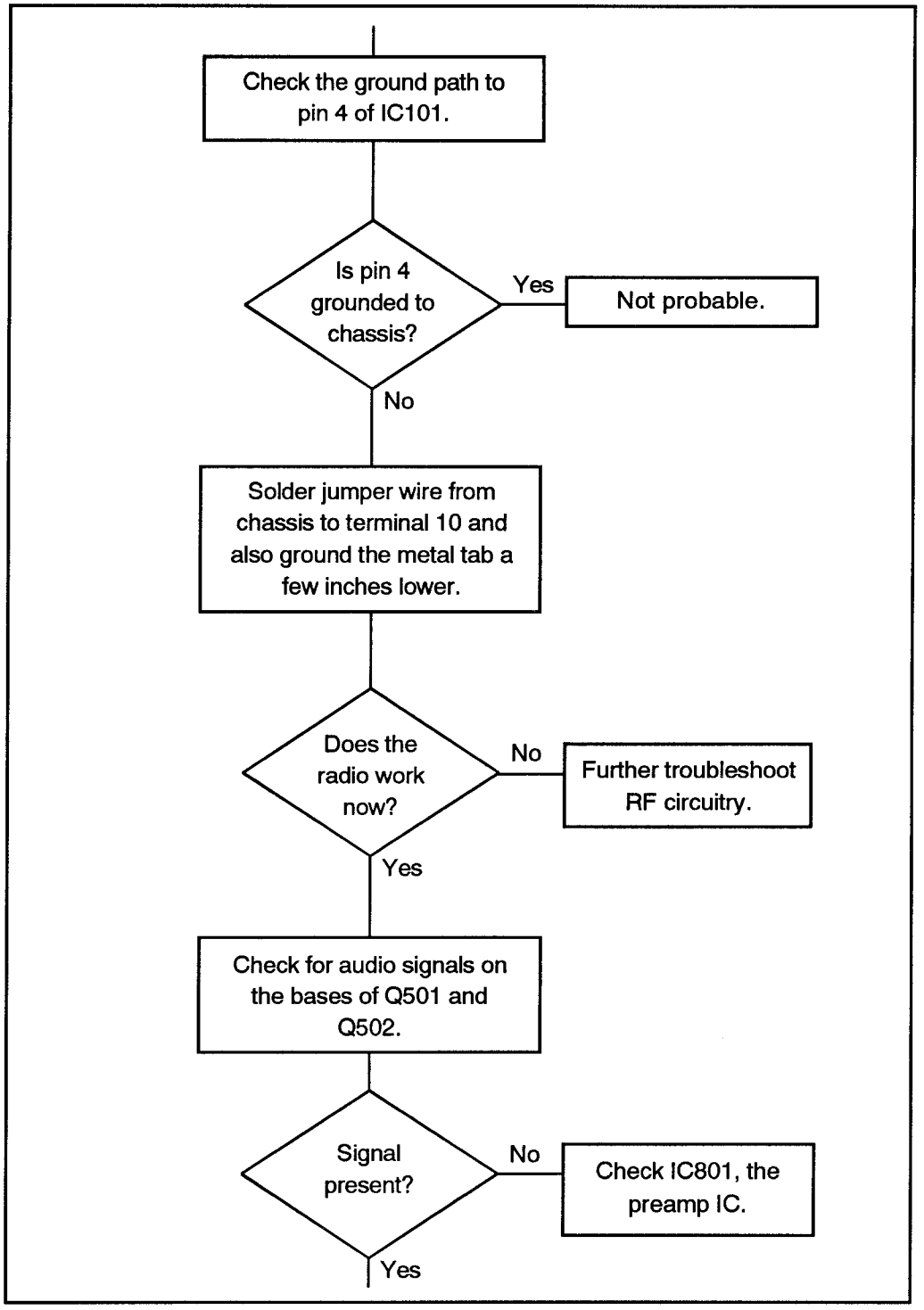
Check the ground path to pin 4 of IC101.
Is pin 4 grounded to chassis?
Yes
Not probable.
No
Solder jumper wire from chassis to terminal 10 and also ground the metal tab a few inches lower.
Does the radio work now?
No
Further troubleshoot RF circuitry.
Yes
Check for audio signals on the bases of Q501 and Q502.
Signal present?
No
Check IC801, the preamp IC.
Yes

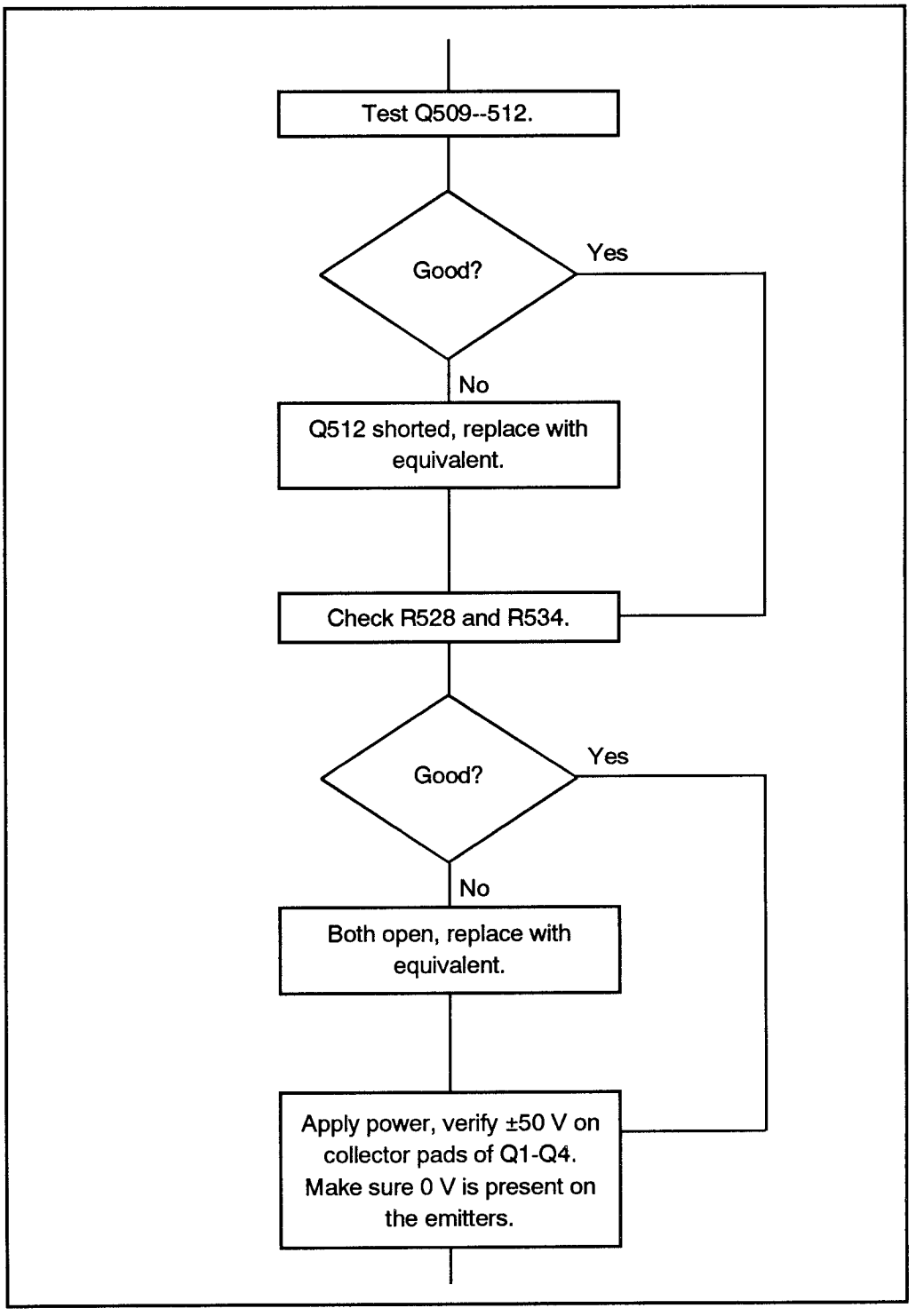
Test Q509--512.
Good?
Yes
No
Q512 shorted, replace with equivalent.
Check R528 and R534.
Good?
Yes
No
Both open, replace with equivalent.
Apply power, verify ±50 V on collector pads of Q1-Q4. Make sure 0 V is present on the emitters.

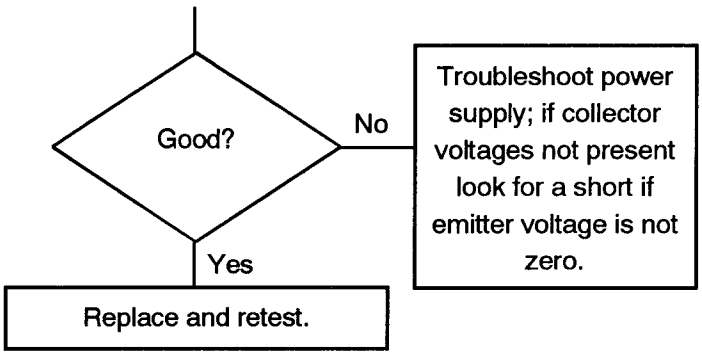

Conclusion: The solution to this repair involved finding the floating ground. Whenever disassembling a unit, don't detach ground wires. Also, when removing PC boards, pay close attention to the screws that secure the board to the chassis. Often, PC boards connect to ground paths through mounting screws.

7/R - VCS
Various Case Studies

7/R - VCS - Tech ST-S8
Technics ST-S8

Introduction

The ST-S8 is a compact AM/FM unit designed for reception and play of the standard radio broadcasts in both monaural and stereo. The unit is relatively simple in design and uses a central 1704 IC to handle much of the processing and control.

The various test and adjustment points are shown in Figure 1. It's important to note that L301 and L304 have been critically set in manufacture. These should not be touched or adjusted.

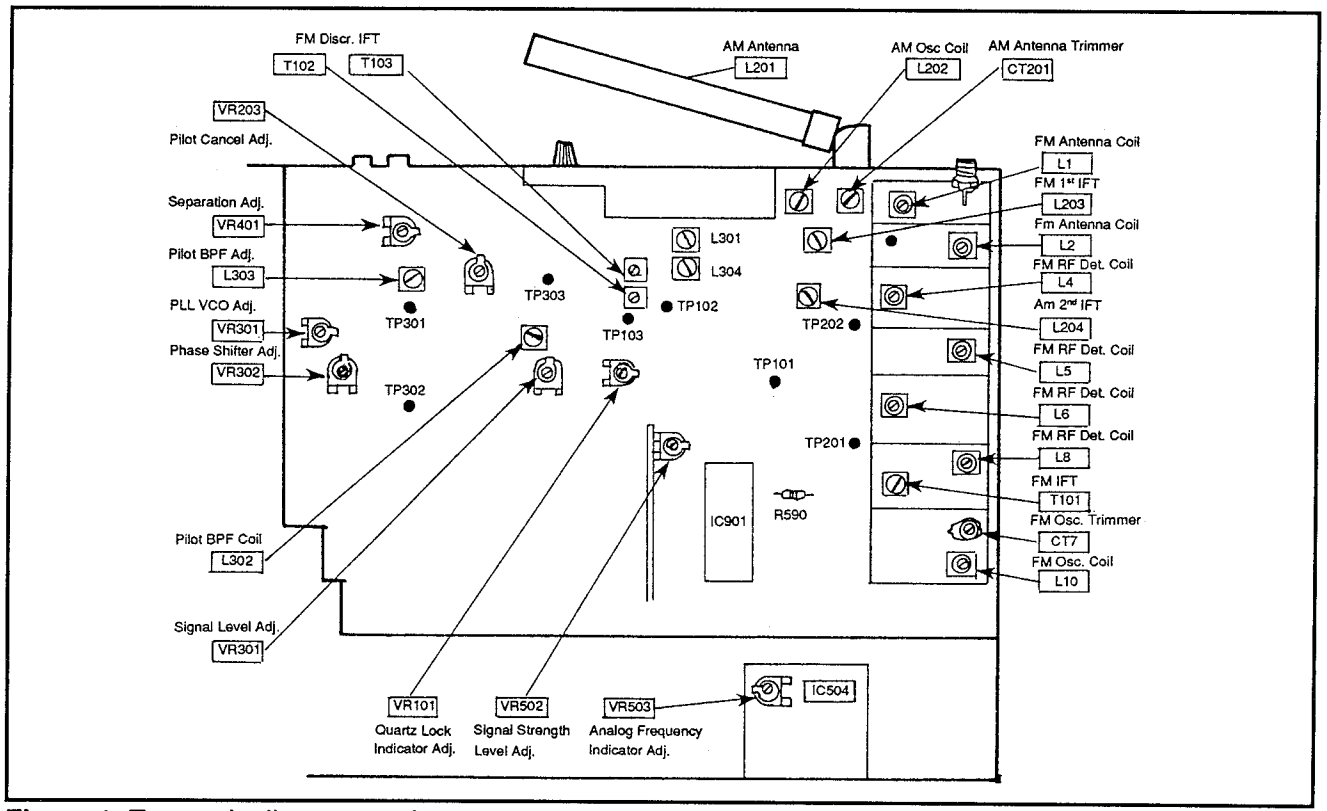

Figure 1: Test and adjustment points

AM Adjustments

To make all adjustments to the AM sections you need a voltmeter (preferably a DMM) capable of measuring both AC and DC, an AM signal generator and a non-metal screwdriver for making adjustments to various components. (A metal screwdriver will change the characteristics of the adjustable component. This is particularly true with coils.)The frequency used with the generator will change, but in all cases use a 30% modulation with 400 Hz. The generator output should be as low as possible while still providing the necessary readings.

Set the Technics' selector to the AM position and the FM/AM allocation selector to the 0.2 MHz/10 kHz position.Place the antenna coil at a 25 degree angle away from the back panel. Connect the AM signal generator to the antenna terminal through a 200 pF capacitor, and with the common going to the chassis ground. You are now ready to make adjustments to the AM sections of the unit.

AM IF Adjustment

Set the AM signal generator to 450 kHz. Set the DMM to read volts AC and connect it to the output terminals. (As an option you can use an oscilloscope hooked to the output terminals.)

L203 is the first IFT; L204 is the second IFT. Adjust these so that output voltage is maximum.

AM RF Adjustment

With the AM signal generator connected as above, set it for a frequency output of 530 kHz. This should show on the set's display. Set the DMM to read DC volts and connect it to TP201. Adjust L202 (the oscillator coil) so that the reading is 1 V ±0.05 V.

Readjust the signal generator to 610 kHz, and verify that the display shows this frequency. Set the DMM to read AC volts and connect it to the output terminals of the unit (in back). Adjust L201 (the antenna coil) for maximum output.

Finally, reset the generator to provide a frequency of 1500 kHz, and again verify this on the display. Leave the DMM set for AC volts and connected to the outputs. Adjust CT201 (the antenna trimmer) for maximum level output.

It's a good idea to repeat the last two steps at least twice to be sure that everything is fine-tuned. This is especially important if the frequency shown on the display wasn't correct.

FM Adjustments

As is always the case, the FM sections tend to be more complex and thus require a larger number of adjustments. To make these adjustments a voltmeter capable of reading AC and DC volts is required. Other equipment needed is an

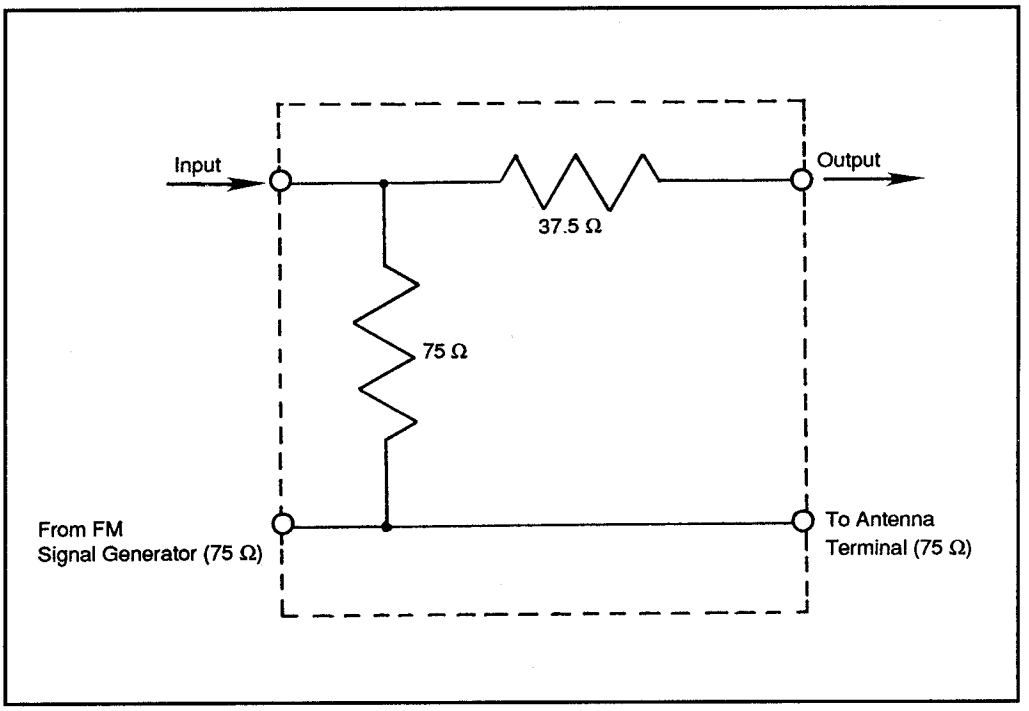

Figure 2: A 75 Ω FM dummy antenna

oscilloscope, a distortion analyzer and a frequency counter with a range of at least 19 kHz to 108 MHz.

The FM signal generator used should provide 100% modulation with 400 Hz at the various frequency settings, except where specifically noted (when nonmodulation is required to make an accurate test). The generator's output should be 72 dB. This is to provide an actual input of 60 dB (1 mV) through the FM dummy antenna shown in Figure 2.

The signal generator is connected to the unit at the FM antenna terminals. To do this a dummy antenna is needed. You can easily build the device yourself. All you need are two resistors (37.5 Ω and 75 Ω) and a little wire. It easier if you install clips on the ends.

Before beginning, place the FM IF band switch to the "normal" position, the FM mode switch to the "auto" position, the display switch to the "signal" position, and the FM muting switch to "off". Place the FM tuning level switch to the "standard" position and the FM/AM selector to the FM position.

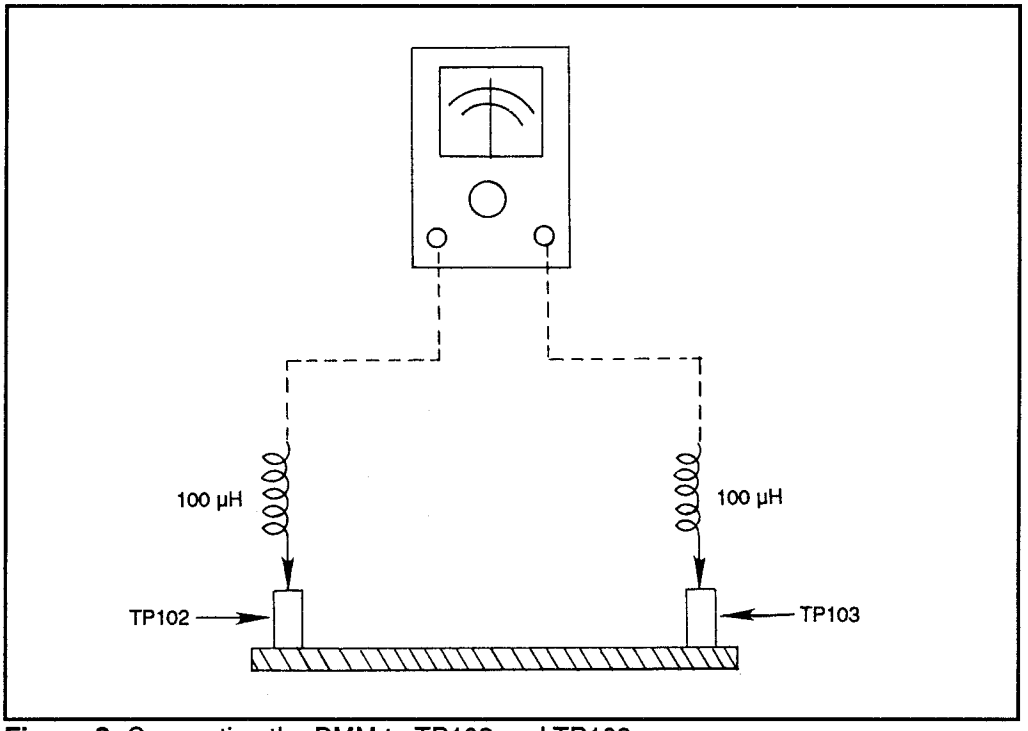

Figure 3: Connecting the DMM to TP102 and TP103

FM IF Adjustment

With no signal input, set the display to read 100.1 MHz. Set the DMM to read DC volts. Attach a 100 µH choke coil to each of the DMM's probes, and these in turn to TP102 and TP103 (as shown in Figure 3).

Adjust the discriminator IFT, T102, so that the voltage reading is 0 V in the 300 mV range.

FM RF Adjustment

Begin with no signal input and the DMM set to read DC volts. Connect the DMM to TP1. Adjust L10 (the oscillator coil) until the voltage reads to within 0.1 V of 4.1 VDC.

Now connect the FM signal generator through the 75 Ω dummy antenna as explained above. Set the generator to supply a 90.1 MHz signal, and check the display to verify that it shows this reading. Connect the oscilloscope to the set's output terminals.

Adjust L4, L5, L6 and L8 (all of which are FM RF detector coils), L1 and L2 (the FM antenna coils) and T101 (the FM IFT).

Add a weak input so that noise is introduced in the output waveform, as shown in Figure 4. Adjust the coils and IFT until the output waveform is vertically symmetrical.

Change the signal generator frequency to 106.1 MHz. Adjust CT7, the FM oscillator trimmer, again with the goal being a symmetrical waveform.

Repeat the last two steps until the waveform is correct and until the dial display indicates the input frequency. Then return to the adjustment on the L10 oscillator coil to be sure that the results for this step haven't changed. If they have, readjust L10, repeat the coil and trimmer adjustments and recheck L10. Repeat this sequence until the readings are exactly correct.

FM Mono Distortion Adjustment

With the FM signal generator connected as above (through the dummy antenna), set the output for 100.1 MHz. Connect the distortion analzyer to the unit's output terminals.

Adjust T103 to minimize the distortion on both the left and right channels. Return to the test above concerning T102 and check the deflection. If need be, readjust T102. (You may also have to repeat the RF coil and trimmer adjustments but this is relatively rare.)

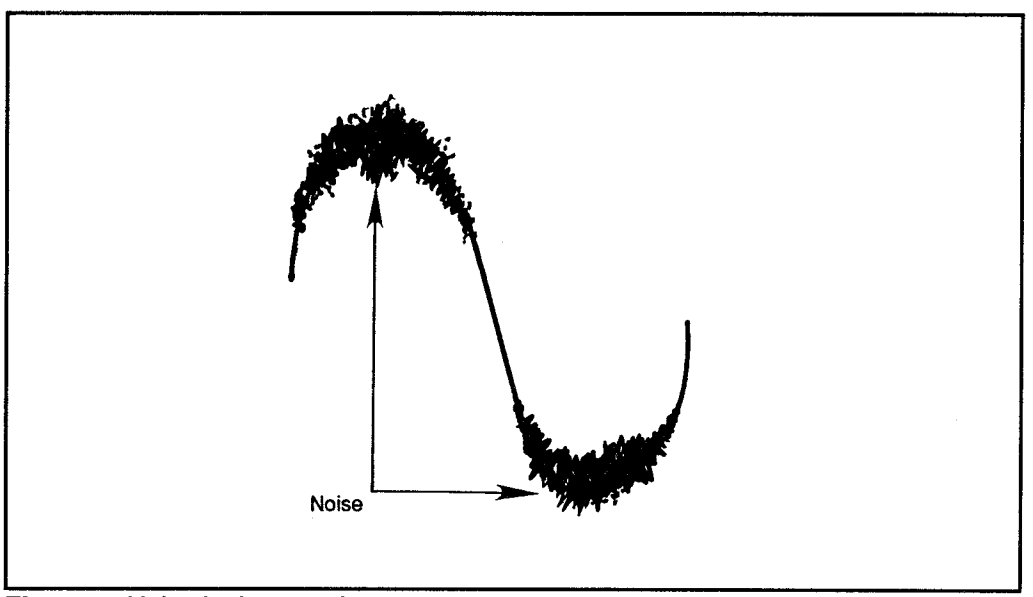

Figure 4: Noise in the waveform

FM Multiplex Pilot (VCO) Adjustment

With the FM signal generator connected to the antenna terminals through the dummy antenna, insert an unmodulated 100.1 MHz signal into the system. Connect a frequency counter to TP302. Adjust VR301 (the pilot or VCO) to get a reading on the frequency counter of 19 MHz ± 30 Hz.

Pilot Bandpass Filter Adjustment

The signal from the FM generator should be at 100.1 and unmodulated. Set the DMM to read AC volts and connect it to TP301. The two bandpass filters are L302 and L303. Adjust these so that the voltage is maximum.

Pilot Cancel Adjustment

With the generator still at 100.1 MHz and unmodulated, connect an oscilloscope to TP303. Adjust L302 (pilot BPF) and VR303 (pilot cancel adjust) to minimize the voltage and to cause a waveform similar to Figure 5.

Phase Shifter Adjustment

For this adjustment the FM signal generator should again be set for 100% modulation with 400 Hz. Set the DMM to read AC volts and connect the probe to the left channel output. Adjust VR302 to bring the left channel output to a maximum level.

Stereo Distortion Adjustment

With the signal connected as above, connect the distortion analyzer the left channel output terminal through the lowpass filter. Adjust T101 to be within ±90° of the preset and already adjusted core position, so that the left channel distortion is minimal.

With this completed, go back to the FM IF and RF adjustments given above and repeat the steps.

Separation Adjustment

Using the same 100.1 MHz signal, adjust the generator to have 100% modulation with 1 kHz. Set the DMM to AC volts and connect the probe to the output terminals, one at a time, through the lowpass filter.

Adjust the separation at the variable resistor VR401 until the right channel output is minimal while the panel control is in the left channel position, and likewise so that the left channel output is minimal with the control in the right channel position.

Signal Level Adjustment

Return the FM signal generator to the 100% with 400 Hz setting (still at a frequency of 100.1 MHz). Reduce the signal strength so that the input level is 50 dB. Turn the variable resistor VR501 in a counterclockwise direction to minimum. Slowly turn the adjusting screw clockwise until the fifth LED comes on.

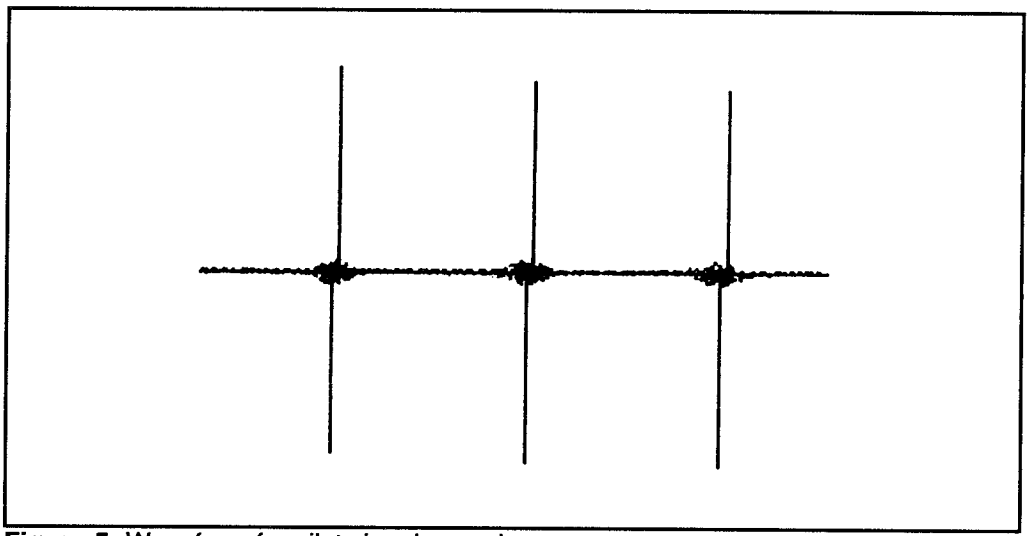

Figure 5: Waveform for pilot signal cancel

Signal Strength Adjustment

Turn on the unit and let it operate for at least one minute to be sure that the power supply is fully warmed and stable.

Increase the signal generator's output to provide 80 dB to the unit. Now push the FM signal button to have the flourescent display indicate signal strength. Adjust the variable resistor VR502 until the level is shown to be 78 dB.

Reduce the generator's output to a level of 40 dB. Check the unit's indicator. It should show this level within a range of 36-48 dB. If it does not, and particularly if the indication is below 36 dB, cut off R590, located near IC901, and try to readjust VR502.

Quartz Lock Indicator Adjustment

VR101 is the quartz lock indicator adjustment. With everything connected as before, turn this variable resistor counterclockwise until the quartz lock indicator goes out. Slowly turn the screw clockwise, adjusting it to a point at which the quartz lock indicator lights up.

Analog Frequency Indicator Adjustment

Change the FM signal generator output frequency to 107.1, and verify that this is shown on the display. Turn VR503 clockwise until the LED 15th from the left goes out. Slowly adjust VR503 until this 15th LED lights up and 14th goes out.

The ICs

Much of the processing is handled by IC901. This is a 42-pin SVID1704C514 chip. This 1704 chip interconnects with the other circuits and chips. Figure 6 shows the pinout configuration of this IC.

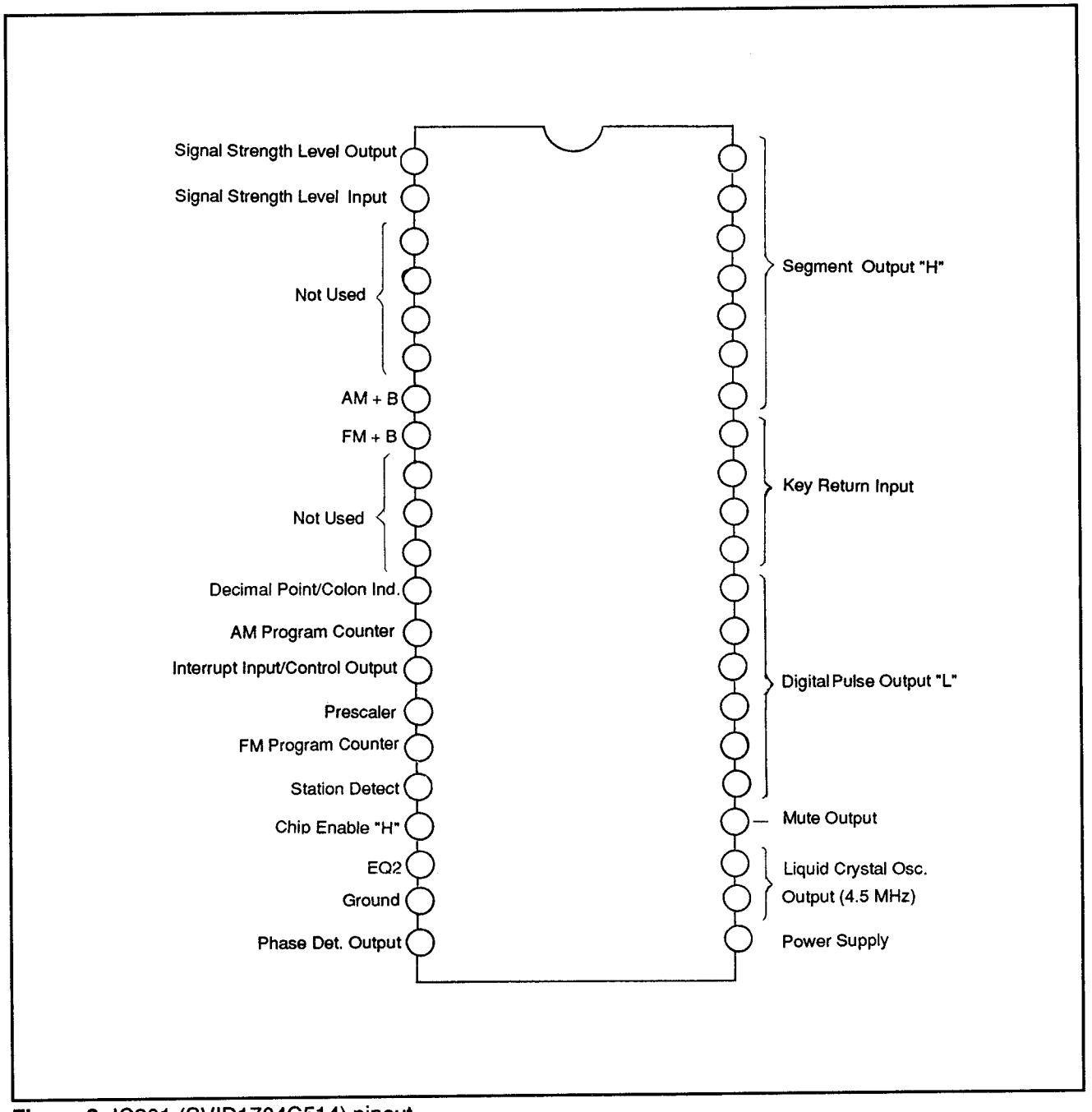

Figure 6: IC901 (SVID1704C514) pinout

Pin Description Table

Pin	Description
1 - 7	Segment output and key matrix signal "H"
8 - 11	Key return signal input
12 - 17	Digital pulse output "L"
18	Muting output ("L" in normal mode; "H" in tuning or preset mode)
19 - 20	Liquid crystal oscillator input (4.5 MHz)
21	Power supply (4.8 V)
22	Phase detect output
23	Ground
24	EQ2 (0.6 V)
25	Chip enable ("H" at normal; "L" at memory holding)
26	Station detector input ("L" in autoscanning, which activates muting circuit)
27	FM program counter input
28	Prescaler control
29	Interrupt (control) input
30	AM program counter input
31	Decimal point indication output in FM; colon indication output during channel display
32 - 34	Not used
35	FM +B voltage control; "H" in FM, "L" in AM
36	AM +B voltage control; "H" in AM, "L" in FM
37 - 40	Not used
41	Signal strength level input
42	Signal strength level output

The remainder of this section shows you the pinouts and typical voltages you can expect at the pins.

Pin Connections

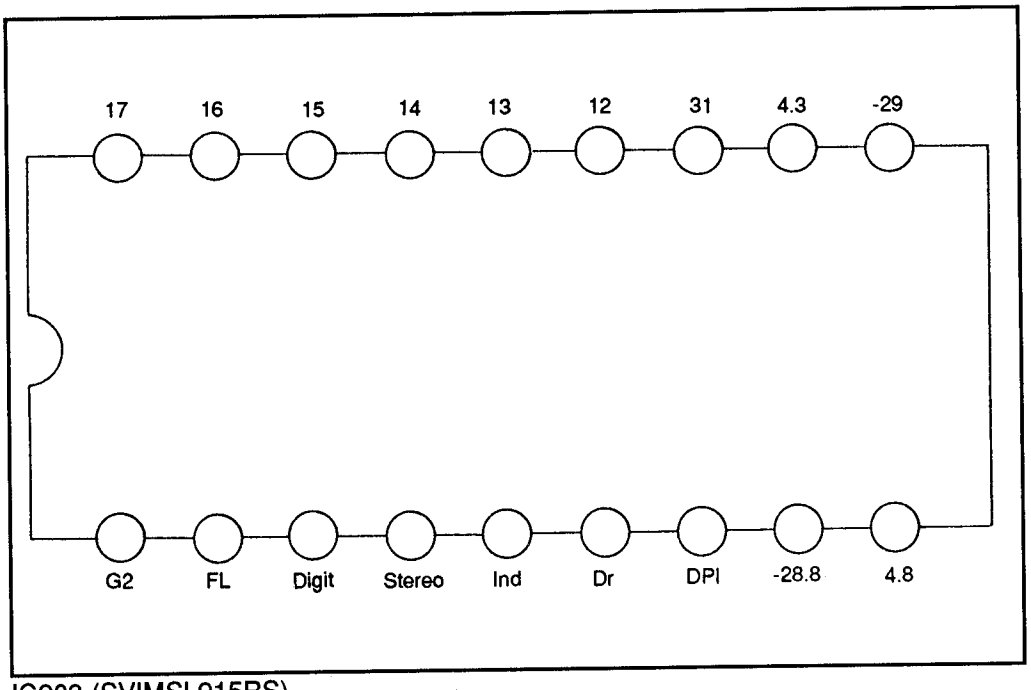

IC903 (SVIMSL915RS)

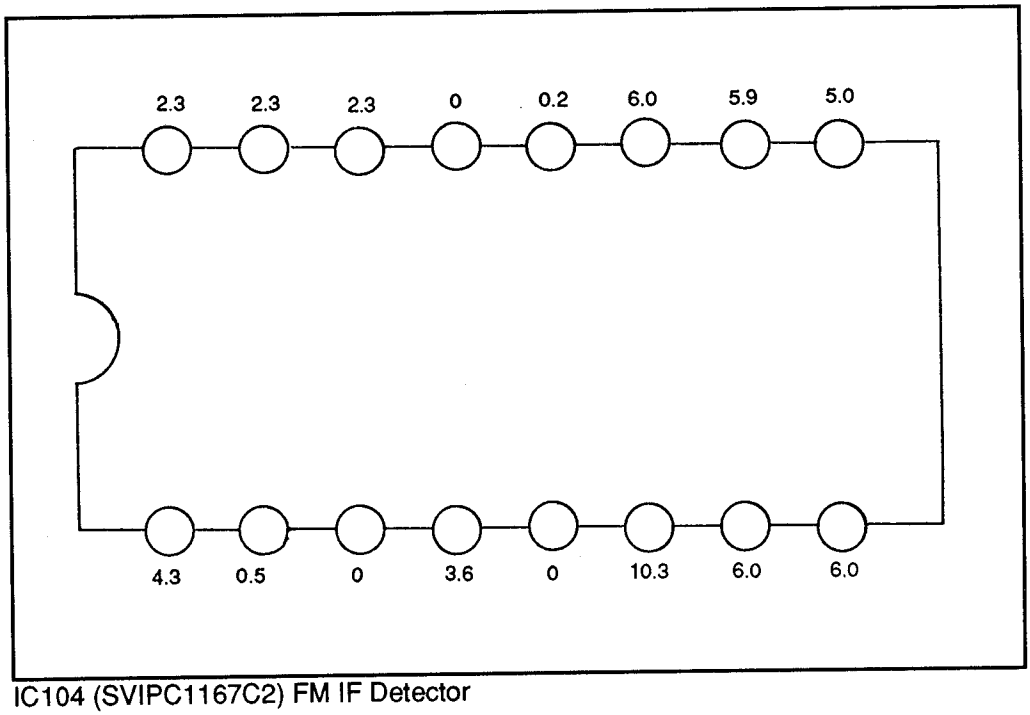

IC104 (SVIPC1167C2) FM IF Detector

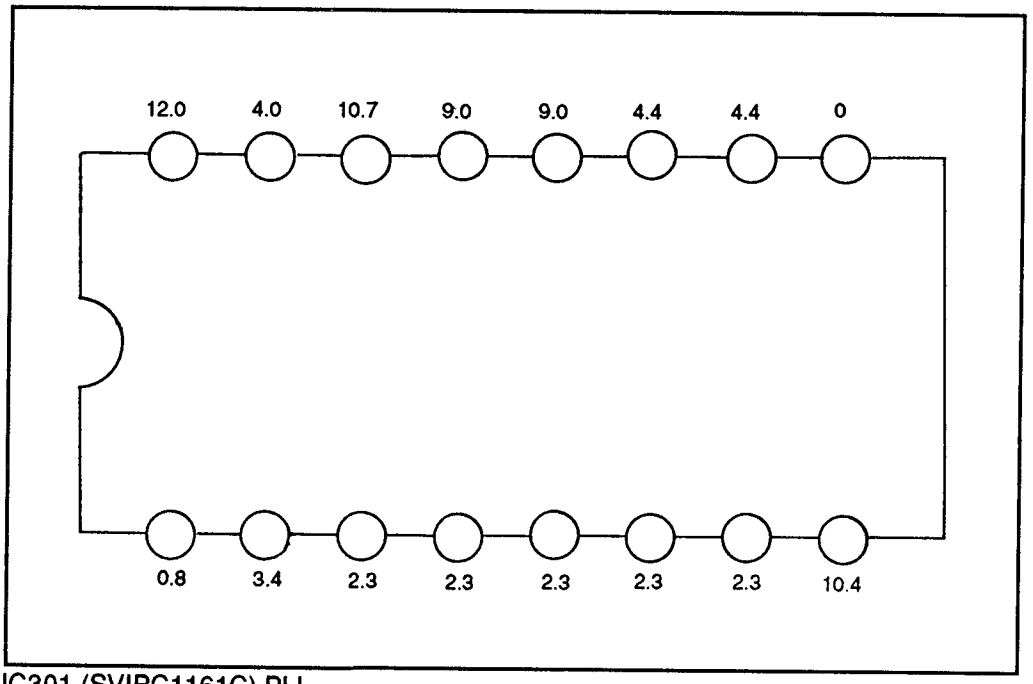

IC301 (SVIPC1161C) PLL

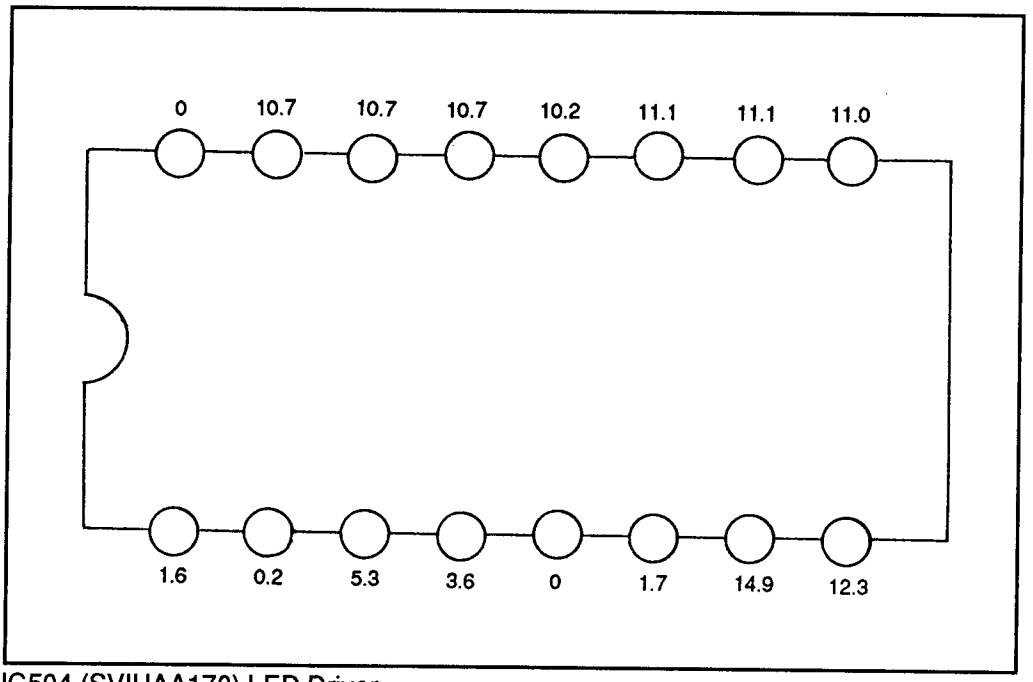

IC504 (SVIUAA170) LED Driver

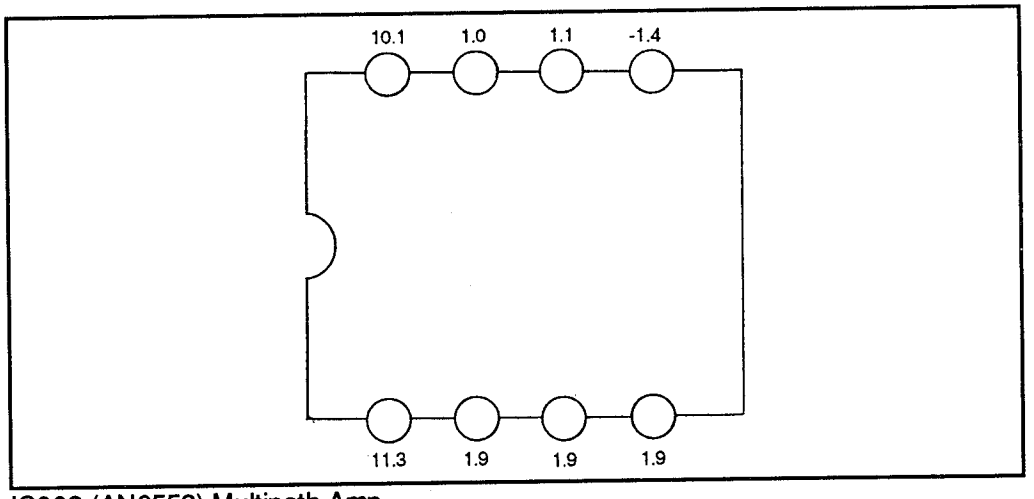

IC302 (AN6552) Multipath Amp

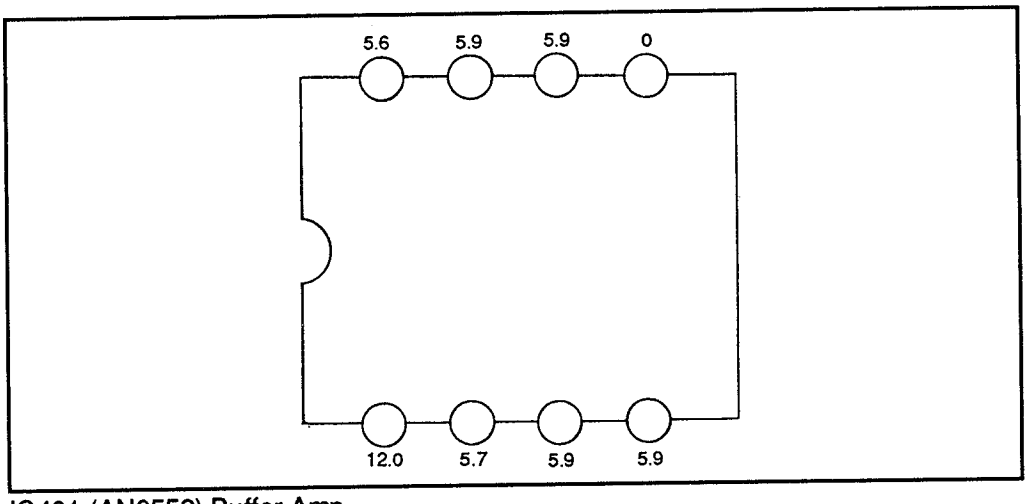

IC401 (AN6552) Buffer Amp

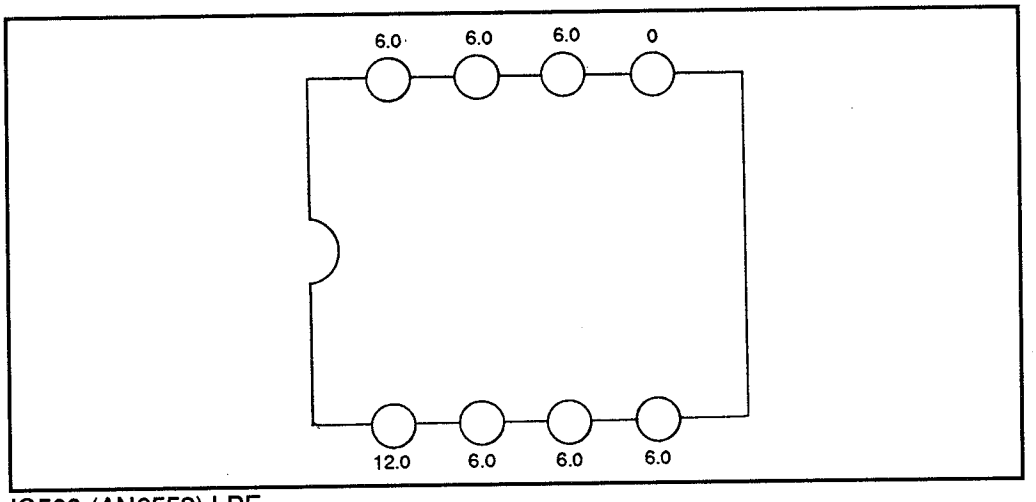

IC503 (AN6552) LPF

7/T - VCS
Various Case Studies

7/T - VCS - ZXP
Zenith XP Tuner

Introduction

This case study covers troubleshooting and repairing the Zenith IS4090-XP series tuner with built-in tape player/recorder. The information provided can also be applied to the many different makes and models of tuners available.

Adjustments

As with any receiver, the unit has been factory aligned and should not be adjusted unless a component has been replaced or someone has been tampering with the settings.

Assuming that you use exact replacement parts, alignment should not be necessary even after fairly extensive service and repair. The only exception to this is when one or more of the many coils is replaced. Even then alignment may not be necessary. The trick is to always use exact replacement parts when servicing, especially when the equipment at hand is a receiver.

General Troubleshooting

The key to general troubleshooting is to determine where the problem is originating. If the FM works and the AM does not, there is a problem in the AM tuner section and not the FM section (this also eliminates the audio output and tape sections). If neither radio section works, or if there is no output at all, the problem does not lie in the AM or FM sections, but is more likely in the audio section.

RF Checks

Units which have AM and FM are generally easier to troubleshoot for this reason. Quickly test to see if the problem is in an RF section or in an amplifier section. If one of the two bands works, the amplifier section is functional. If neither works, the RF sections are probably fine. Having the built-in tape player/recorder gives you an additional easy step. It is highly unlikely that the tape section will record or play if neither RF section is working.

Watching the tape section gives you even more information. If it seems to be playing (i.e., the tape is moving), chances are good that the power supply is not the source of the problem.

FM Multiplex

If there is a problem with the FM multiplex portion of the receiver, you must decide if the problem lies in the RF, IF or the detector portions of the receiver, or if the problem is indeed in the multiplex section at all. By using the composite output of the multiplex generator and injecting at the output of the detector, various problems can be found.

Waveforms

Figure 1 shows the waveform patterns that should be found during testing. These waves can be found in many stages and used for troubleshooting. For example, if the waveform is missing at the third amplifier, but not after the second, check all the circuits between the second and third stages.

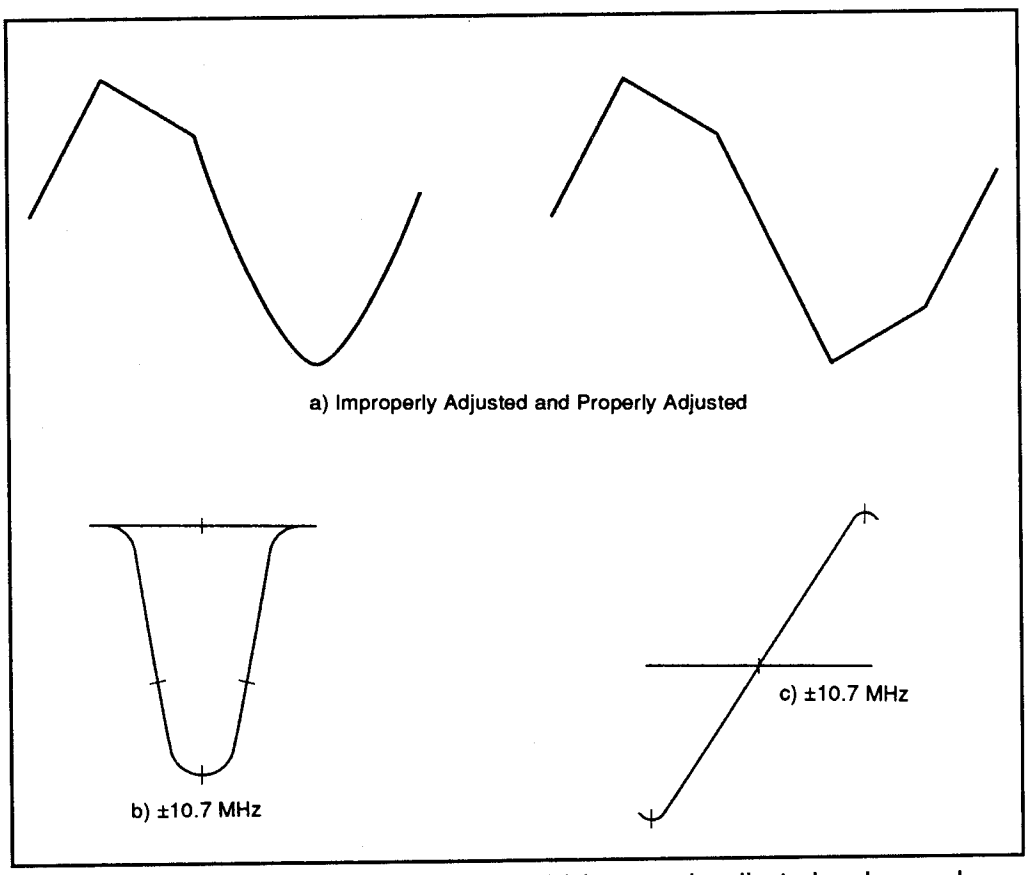

Figure 1: Waveform patterns for alignment, (a) improperly adjusted and properly adjusted; (b) ±10.7 MHz markers in lower quadrants; (c) ±10.7 MHz markers centered on cross-hair

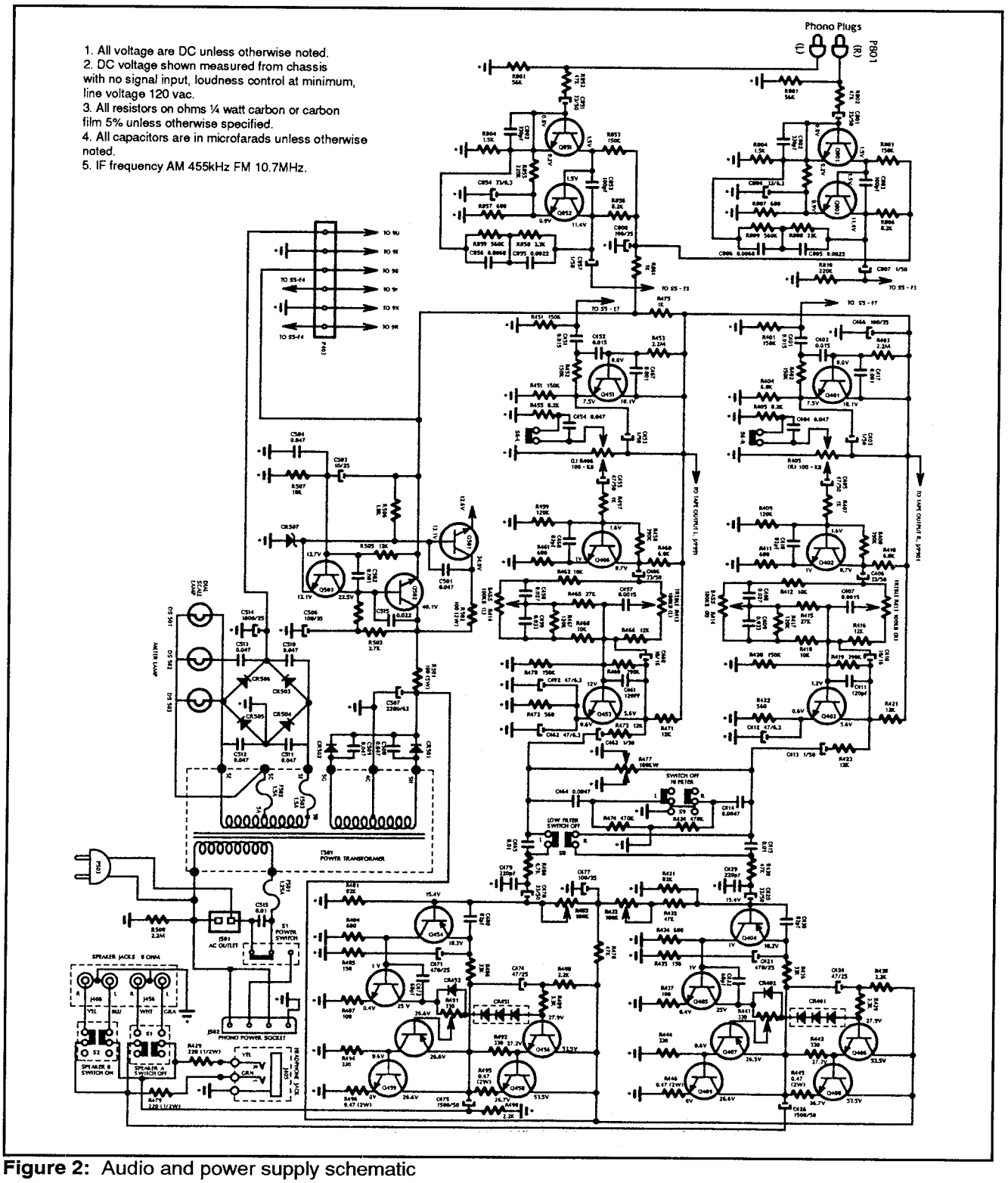

Figure 2: Audio and power supply schematic

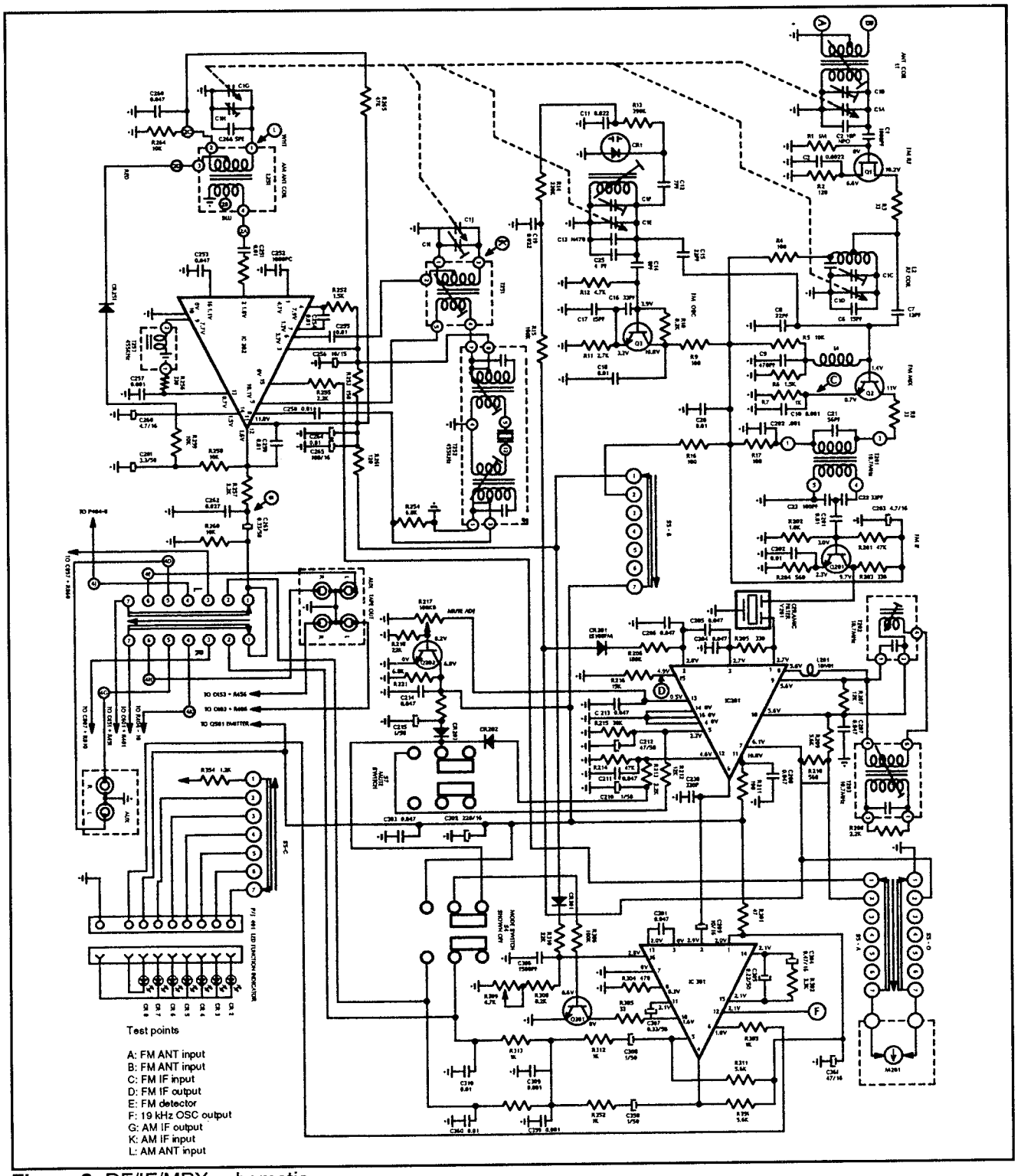

Figure 3: RF/IF/MPX schematic

The waveforms found should be similar in form and magnitude to those shown but may vary slightly from one unit to the next. Still, they are characteristic as to what will be seen in multiplex circuitry.

The various schematics that may be used for reference are shown in Figures 2 and 3. Figure 2 is the audio and power supply schematic. Figure 3 is the RF/IF/MPX schematic and is used when adjusting or repairing the AM and FM tuners.

Schematics

These schematics are probably the best information possible for locating faulty components. Found at each transistor location is the correct voltage level that should be present when the unit is at rest (not passing a signal, but turned on). Simply checking these locations can help to isolate the problem. The ICs all have voltage level readings for all the pins. By using a DMM you can quickly ascertain whether a section is working properly or not, and, in most cases, discover the problem.

The test points are indicated through the text and on the schematic sheets fairly clearly. Locating them on the actual boards can sometimes be difficult, but, hopefully, the text will lead you to the correct location.

AM Alignment

AM alignment should be done by the sweep method shown below. Aligning by alternate methods is not recommended, but may be necessary if your sweep generator does not have sweep capabilities for the AM IF.

Test Equipment

For AM IF alignment you need an oscilloscope and an AM sweep signal generator or 10 kHz deviation and 60 Hz modulation for the full bandpass display. Make sure the unit is turned to the AM band and connect a modulation frequency to the horizontal input of the scope.

Testing

Locate test point "L" (the AM antenna input). This is in the AM gang antenna section. Short this test point to chassis ground. Attach the generator output probe "A" as the dummy antenna.

The generator should be connected to test point "K", which is the AM IF input located at T251 pin 1. Connect the scope to the detector output, test point "G". Set the input frequency to ±455 kHz and the dial so that the gang is closed. The generator should be set to the center frequency of the ceramic filter.

Next, tune the generator to the center of the total bandpass. The generator should not be changed for the rest of the AM IF alignment procedures.

With the gang closed, center the frequency of the ceramic filter in T252. This controls the amount of symmetry of the gain and should be adjusted for maximum gain and symmetry. Adjust T252 primary, T252 secondary and T253 for the alignment procedure. Adjust T253 to its maximum reading.

Next is the alignment of the oscillator to the dial scale. Begin by removing the short between test point "L" and the chassis ground. There should be no dummy antenna used for this alignment.

Connect the generator through one turn of wire loosely connected to the AM wave magnet antenna. Connect the oscilloscope to the detector output test point "G".

The input frequency for the first part should be set at 1600 kHz. Tune the dial to 1600 kHz as well and make adjustments at C1I until you detect the input signal of 1600 kHz when the dial is set at 1600 kHz.

Next tune the dial to 600 kHz and set the input signal frequency to 600 kHz. The scope should detect the signal of 600 kHz. If not, adjust T251 until this is so. Repeat these two adjustments until there is a minimum variance (maximum accuracy).

The next alignments are for the antenna stage. Set both the dial and the input frequency to 1400 kHz. Adjust C1H until the signals are matched.

Set the input frequency and the dial to 600 kHz. Adjust L251 if needed. Repeat the C1H and L251 steps until there is a minimum change. This concludes the AM alignment procedures.

AM Alignment Without Sweep Generator

For a proper alignment without a sweep generator, use a signal with 400 Hz modulation. Set the receiver to the AM band. Begin as before by shorting the test point "L" (of the AM gang antenna section) to the chassis ground.

With the generator's probe A used as a dummy antenna, connect the generator to test point "K". Connect VTVM to the detector output test point "G". The input signal should be ±455 kHz and the gang should be closed. The AM IF input is located at T251, pin 1.

Rock the generator while adjusting T252 primary for a maximum level. Next adjust T252 secondary for a maximum level. Continue adjusting the primary and secondary T252 until there is a maximum output and minimum change. Also, the output signals should be equal when the generator is detuned.

Next, send the input frequency to the ceramic filter in T252. Adjust T253 until there is a maximum signal.

Remove the short between the test point "L" and the chassis ground. (This disconnects the dummy antenna.) Connect the VTVM to the detector output test point "G". Loosely connect one turn of wire, with this coupled to the AM wave magnet antenna and thus to the receiver's generator.

Input a signal of 1600 kHz and tune the dial to 1600 kHz. Adjust C1I for the best signal. Input a signal of 600 kHz and set the dial to 600 kHz. Adjust T251 for the best signal. It's best to repeat these two adjustments at least twice for maximum signal and minimum change.

Change the dial setting to 1400 and input a signal of 1400 kHz. Adjust C1H for the best signal. Again tune the dial to 600 and input a signal of 600 kHz. Adjust L251 if needed. If an adjustment is needed, it is advisable to repeat each of these tests and adjustments.

FM Alignment

Multiplex

The FM signal circuitry is of a multiplex design. This means that the RF, IF and detector alignments must be set so that the unit works normally on monaural signals yet also decodes stereo signals.

The use of a multiplex generator is an excellent way of troubleshooting since there is the composite multiplex signal present along with the RF signal. This composite signal can be very useful for signal tracing the multiplex portion of the receiver.

The composite signal used for multiplex alignment must modulate the RF carrier. The input is to the FM antenna terminals. Alignment using this composite signal is then possible.

It should be noted that multiplex alignment cannot be made by using the composite signal injected at the output terminal of the detector. If the signal is injected at this point, there is always some phase shifting in the RF, IF or detector circuits. This can cause improper alignment.

The FM section uses a wide bandpass and requires the use of a signal generator that has frequency modulation of 50 Hz and a deviation of 250 kHz. You also need an oscilloscope to align the RF and FM sections of the receiver.

IF Amplifier

The IF amplifier stages require a maximum amplitude and symmetry in order to achieve the best output signal. Use markers to obtain the IF curve symmetry. Put the receiver to the FM position. Set R217, R309 and T201 to the middle positions. Then connect the generator to the receiver, and connect the generator ground to the gang frame. The generator output probe "A" is connected as the dummy antenna.

Shunt C1E to ground with a .001 mF capacitor. Connect the generator to test point "C", which is the FM IF input found at emitter of Q2.

To align the IF transformer for maximum output and symmetry, and to achieve the scope pattern shown in Figure 1-b, connect the scope to test point "D" (found at IC201, pin 15). The input signal should be set to 10.7 MHz and the gang closed. Tune the generator to center the total bandpass waveform.

Do not change the generator frequency for the rest of the tests. The input frequency should be the center frequency of the ceramic filter, Y201. Refer to the following table for the ceramic filter types and their frequencies.

Ceramic Filters		
Color Code	**Nominal Center Frequency**	**Frequency Range**
Black	10.64 MHz	10.61 to 10.67 MHz
Blue	10.67 MHz	10.64 to 10.70 MHz
Red	10.70 MHz	10.67 to 10.73 MHz
Orange	10.73 MHz	10.70 to 10.76 MHz
White	10.76 MHz	10.73 to 10.79 MHz

Adjust T201, top and bottom, until the scope pattern is the same as Figure 1-b. This concludes the IF transformer alignment.

The FM detector alignment uses a signal of 75 kHz deviation with a 1 kHz modulation. (If the generator being used does not have the ability to provide output for audio modulation, use the horizontal output from the generator, or the oscilloscope's horizontal sweep.) Connect the generator modulation frequency to the oscilloscope's horizontal input. Adjust the generator IF frequency to be at the center of the bandpass waveform.

Connect the generator to test point "C" (the FM IF input at the emitter of Q2). The generator output probe "A" is again connected as the dummy antenna.

Using a distortion analyzer connected through A100, check the center frequency of the ceramic filter Y201. (Refer to Table 1 for the correct frequency reading.) Adjust T203 to read the minimum distortion level.

If a distortion analyzer is not available, connect the oscilloscope to test point "E" (the FM detector output, pin 6 of IC201). Make sure the gang is closed. Adjust T203 to read a linear scope trace with no curve at the ends of the trace.

Next, with the oscilloscope connected to test point "E" (pin 6 of IC201), adjust T202 to achieve a center reading on the tuning meter.

Mute Adjustment

Remove the shunt across C1E. Disconnect the FM antenna, then connect the generator between test points "A" and "B", the FM antenna inputs. A 300Ω balanced load serves as the dummy antenna to the receiver. Feed a 98 MHz signal to the unit with the dial set to 98 MHz. Adjust R217 (mute) so there is no sound output when the input is below 1.7 V with the mute switch on.

Set the input signal to 106 MHz and the dial to 106 MHz. Adjust C1F so the oscillator is the same as the dial scale.

Set the input signal to 90 MHz and the dial to 90 MHz. Adjust L3 to assure that the oscillator output is the same as the dial scale.

Set the input signal to 106 MHz and the dial to 106 MHz. Adjust C1C so that the FM detector stage is maximized.

Set the input signal to 90 MHz and the dial to 90 MHz. Adjust L2 (if necessary) to assure the detector stage is maximized.

Repeat each of the last four steps until the FM antenna stage is maximized. This concludes the mute adjustments.

Left/Right Alignment

Connect a frequency counter or oscilloscope to test point "F". This is the 19 kHz oscillator output found at pin 12 of IC301. Input an unmodulated RF carrier signal to the unit. The signal should be about 100 V which will obtain a full-limiting effect at the point near 98 MHz. Adjust R309 until the frequency counter reads about 19 kHz ±100 Hz.

An alternate method would be to connect test point "F" to the oscilloscope's vertical input and an accurate 19 kHz signal to the oscilloscope's horizontal input. Adjust for a square synchronized waveform.

Connect the scope and/or a DMM to the left tape output. Feed a 98 MHz signal to the unit. Try each of the settings, L+R, L-R and L only. Check for separation and a maximum left output. Connect the oscilloscope and/or DMM to the right output and repeat the process.

This concludes the FM alignment and testing.

RF Injection

RF signals should be injected at a point in the FM band where there is no other signal present (to avoid interference and/or false readings). When possible, the center of the band is preferred.

Audio Alignment

Adjust the generator's RF input frequency to the same point. The AGC signal should be maximized. This determines whether the unit is on the correct signal and not an image.

Audio alignment assures that the audio output for the left and right channels are at the proper levels. To begin the adjustment, set the bass, treble and balance controls to their middle positions. The volume should be turned down. Adjust the output stages for proper idle current with no signal input before performing the adjustments.

With no input signal, connect the DMM across R446. Adjust R441 for a 10 mV (20 mA) reading across this resistor. Repeat the procedure with the meter across R496. This is the best method for making the audio output idle current adjustments.

An alternate method is also available. Again, set the the bass, treble and balance controls to their center positions. Set the idle current controls R441 and R491 to their minimum positions. Connect the generator to the right auxiliary input with an input signal of 20 kHz at 150 mV. Connect the oscilloscope to the right speaker output. Adjust R441 until the crossover distortion just disappears.

Move the generator to the left auxiliary input with the same input of 20 kHz at 150 mV. Move the scope to the left speaker output. Adjust R491 until the crossover distortion disappears.

To adjust the audio output driver bias, set the controls as before (bass, treble and balance controls to the middle position and the volume all the way down). Connect the generator to the right auxiliary input and the oscilloscope to the right speaker output. The input signal should be set to 60 Hz at 180 mV. Adjust R433 to obtain an equal clipping on both peaks of the waveform. If needed, increase

the generator level slightly to achieve a clipping effect. The scope pattern should look like that shown in Figure 1 (a) (see page 2).

Move the generator connection to the left auxiliary input and the scope to the left speaker output. The generator should be the same as before. Adjust R483 and obtain the waveform like that of Figure 1 (a). This concludes the audio output driver bias adjustments.

Table of Contents

Section 8
Automobile Electronics

Table of Contents

8/TE *Test Equipment*

8/TR *Troubleshooting and Repair*
8/TR - EC *Electronic Controls*
8/TR - EC - CC *Cruise Control*
8/TR - ECM *Electronic Control Module*
8/TR - ECM - CL *Code Listings*
8/TR - PS *Power Systems*
8/TR - PS - BS *Battery Systems*
8/TR - PS - CS *Charging Systems*

8/VCS *Various Case Studies*
8/VCS - K *Kenwood*
8/VCS - K - CA *KAC-8020 Car Amplifier*

Table of Contents

8/TE
Test Equipment

There are a variety of electronic test items that can be used with automobiles. Short of having an automobile electronic testing and scope unit, your most important piece of test equipment will be the DMM.

DMM

The DMM must be able to measure high impedance. A DMM with a 10 MΩ input impedance should be used because this type of meter will not load down the circuit and create a faulty readings. Some circuits in the Electronic Control Module (ECM) have a very high resistance.

Test Light

An unpowered test light can be very handy in locating shorts to ground or voltage. This test light can also be used to check wiring for complete circuits (e.g., continuity).

Circuit Tester

A circuit tester is needed to check all relays and solenoids before connecting a new Electronic Control Module. The circuit tester will indicate a pass or fail response (via a red or green LED) and usually the polarity of the circuit being tested. (A DMM could probably be used for most of these tests.)

Miscellaneous

Various other test items may, or may not be required. Refer to the automobile-specific manuals to determine needed equipment.

8/TR - EC
Electronic Controls

8/TR - EC - CC
Cruise Control

The electronic cruise-control system can be either a vacuum link system or an electro-motor cruise (or may be available in some other configuration). Figure 1 shows a typical cruise-control switch. This will often be mounted as part of the turn signal lever.

Vacuum Cruise Control

The vacuum cruise-control system is electrically actuated and vacuum operated. The multifunction control switch is located on the left side of the steering column and has a slide switch which has three positions, ON, OFF, and Resume with a Set button located at the end of the stick. This type of system is designed to operate at speeds above 30 MPH.

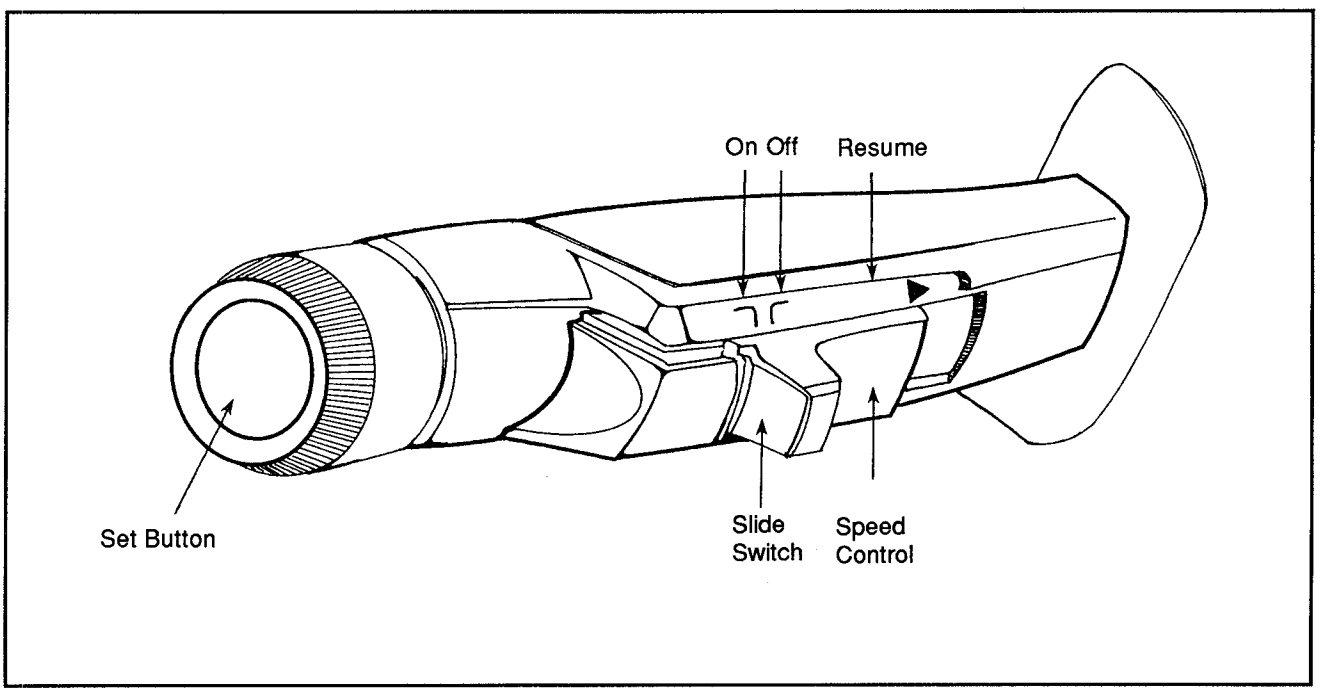

Figure 1: Cruise control switch

When the Set button is pressed, it will engage the system, setting the speed to remain at the current speed. A normal braking action, or even a slight tap on the brake, will cause the cruise control to disengage. It can be reset by pressing the Resume button.

By switching the ON/OFF switch to the OFF position, it will cancel the current cruise control, and clear any preset cruise value.

If the accelerator is depressed further than the current cruise speed, the vehicle will increase in speed. After releasing the accelerator pedal, the cruise control will resume the set speed.

To test the cruise control the vehicle will need to be road tested (driven and tried). A broken speedometer cable from the transmission to the speed control servo will disable both the speed control system and the speedometer. Flutter in the speedometer can cause surging in the speed control system. Any problems with the speedometer must be corrected before proper testing of the cruise controller is possible.

Electrical tests at the servo are done with a 12 V test lamp, using a test clip at one end and a straight probe at the other. A good servo ground is necessary before proceeding to other electrical tests.

The test clip is connected to the positive battery terminal. The test probe is touched to the metal cover of the servo (refer to the service manual for the location of the servo). The lamp should light. In the lamp fails, there is a poor ground. Repair the ground connection.

Connect the test lamp between ground and the brown wire with the red tracer. The ignition switch is then turned on and the cruise control set to the ON position. The test lamp should come on. Push the Set button and see if the lamp goes out. Listen for a click at the servo. If the test lamp does not respond correctly, there is a blown fuse, a defective control switch, or faulty wiring. If the click is not heard at the servo, the servo is defective. Replace the bad item or fix the wiring.

Next, connect the test lamp from ground to the white wire with the red tracer. Turn the ignition and cruise switch to the ON position. Push the Set button. The test lamp should come on when the Set button is depressed. If the lamp does not respond correctly, there may be a defective switch or bad wiring.

The next step is to connect the test lamp between ground and the blue wire with the red tracer. Again, turn the ignition and cruise-control switch ON. The test

lamp should be lit. If not, there may be a bad brake switch, clutch switch, cruise control switch, or bad wiring.

To check the parts of the cruise control switch, disconnect the wiring harness leading up the steering column. Connect a 12 V positive source to the yellow wire terminal in the cruise-control harness connector (male). Attach one lead of the test lamp to ground and the other to the brown wire with the red tracer terminal. The test lamp should be on when the cruise-control switch is in the ON position. The test light should be off when the Set button is pushed or when the cruise switch is off.

Move the test lamp lead to the dark blue wire with the white tracer. The test light should be on when the slide switch is in the ON position. It will be off when the switch is in the OFF position.

Next, move the test lamp lead to the white wire with the red tracer. The test lamp will be off when the slide switch is in the ON position. The test light should go on when the Set button is depressed and off when the button is released. The lamp will go on when the slide switch is moved to the Resume position and off when released.

If any of the above are not working correctly, the switch is most likely bad and should be replaced. It may be possible that the wire connections are bad or broken and could be in need of repair.

Vacuum Supply Test

This is more of a mechanical repair than an electronic one, but the vacuum can cause the servo to appear as it is failing.

Disconnect the vacuum hose at the servo and install a vacuum gauge in the hose. Start the engine and note the gauge at idle. The vacuum gauge should be reading about ten inches of mercury. If not, check for vacuum leaks (as specified in the service repair manual) and/or replace the vacuum hose.

Adjustments to the Cruise Control

The clevis of the cruise-control cable is retained on the stud of the lost motion line by a spring clip. This is shown in Figure 2. A visual inspection will verify if this connector is working properly or not.

The cruise control cable is connected to the servo by means of a wire clip as shown in Figure 3. If the clip is missing, the cruise control will not work. The cable is connected to a cable support bracket by a clip located about seven inches from the stud on the lost motion link. The engine will need to be started and run until it is at operating temperature.

The spring clip from the lost motion link stud should be removed. The clearance between the stud and the cable clevis is about 1/16 of an inch (1.66 mm). A gauge pin should be inserted between the cable clevis and the stud.

Loosen the clip at the cable support bracket and remove any slack from the cable. Tighten the clip at the cable support bracket to the specified setting(e.g., 45 in./lb.)

The lock screw adjustment controls the lock-in occurrence of the cruise control unit. When the Set button is pushed and released at speeds greater than 30 MPH, the speed control system is activated and the system locks in and holds the vehicle at virtually the same speed at which it is moving.

If the engine is poorly tuned, the vehicle is overloaded, or there is slack in the throttle control cable, the lock-in screw will be affected. The screw can only be

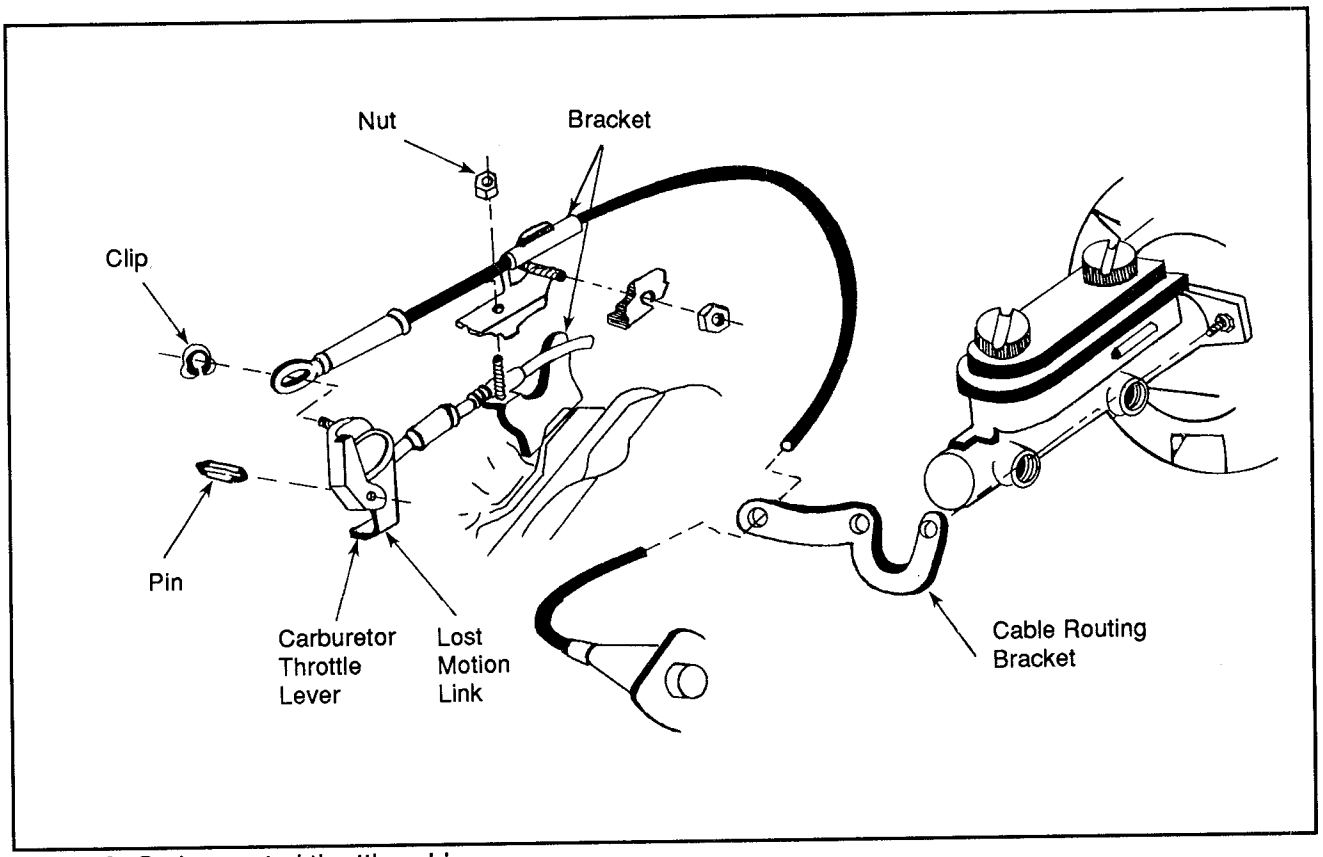

Figure 2: Cruise control throttle cable

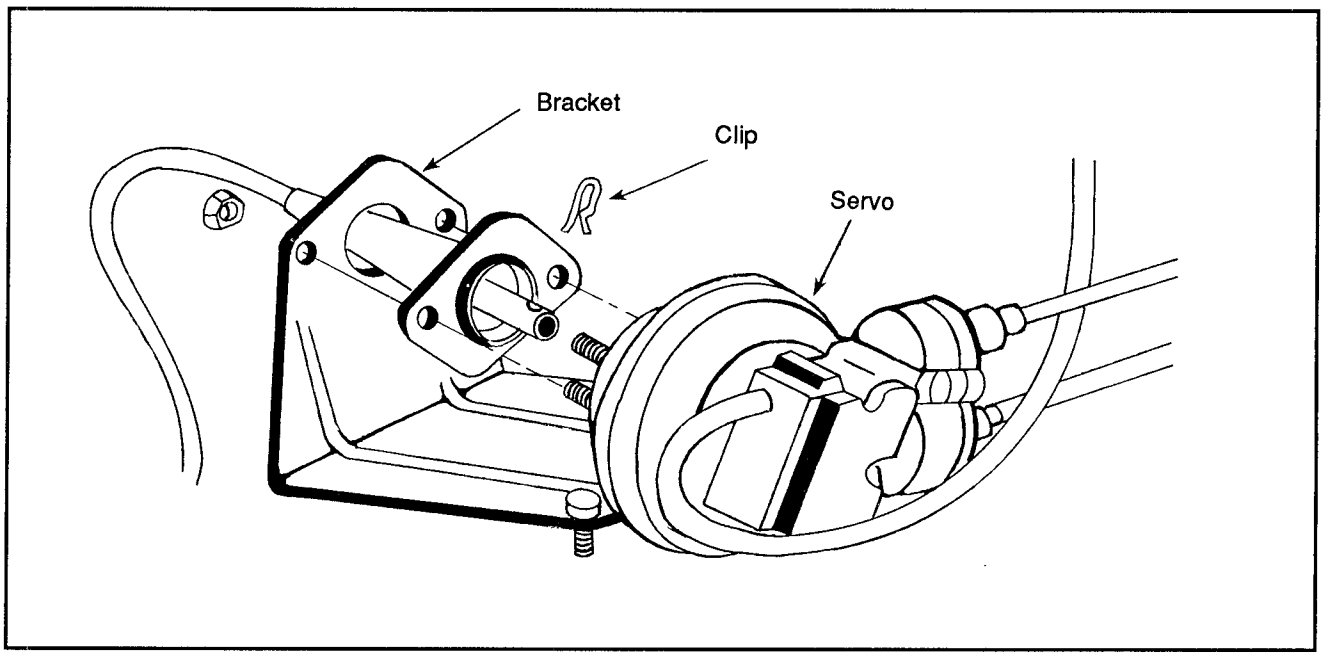

Figure 3: Cruise control cable as connected to the servo

accurately adjusted after proper diagnosis of the cruise-control system operation. The screw should never be turned more than 2 turns in either direction or damage to the unit may occur.

Electro-Motor Cruise Control

The electro-motor cruise control is a speed control system which maintains a desired vehicle speed under normal driving conditions. It has the ability to cruise, coast, resume speed, accelerate, or have the speed increased/decreased in increments. This system operates more smoothly than does the vacuum control system.

The cruise control system uses a control module to obtain the desired vehicle cruise operation. In the module can be found an electronic controller and an electric motor. The controller monitors vehicle speed and controls the motor.

The motor moves a connecting strap and throttle linkage in response to the controller to maintain a constant desired speed. The controller has a built in limit that will not allow it to operate at speeds below 25 MPH.

The cruise system is controlled from the turn signal mounted cruise controller as shown before in Figure 1. There are two to three electrical release switches to disengage the cruise system. Two are located on the brake pedal and the other

can be found on the clutch pedal bracket (for those vehicles with manual transmission).

The brake pedal uses two switches to stop cruise control on a vehicle with cruise. The combined stop control switch and a plunger type release switch are used. When the brake pedal is pushed, each switch stops the cruise control system. The cruise system will remain disengaged after the release of the brake pedal.

The cruise control module will be found in the engine compartment. Consult the service manual for the specific vehicle for the location. If the unit becomes faulty, it cannot be repaired but must be replaced. With virtually no exceptions, the only source of replacement will be a factory authorized dealer.

Testing the unit is pretty much limited to checking cable connections, cruise switch operation and fuse checks. These were explained in the vacuum section and will apply here as well.

8/TR
Troubleshooting and Repair

8/TR - ECM
Electronic Control Module

Introduction

The Electronic Control Module (ECM) has a computer to control fuel delivery, air management, some emission control systems and ignition timing. It may also control the transmission converter clutch, the downshift controls and the manual shift light. The one described in this section should work with most GM automobiles built after 1981.

Operating Procedure

It's not uncommon for the ECM to be damaged even by things seemingly unrelated. For example, ECMs have been ruined when a car has been in for repainting. The operating temperature of a typical ECM must be under 185° F. When an automobile is put into a baking oven, temperatures will often exceed this level. The ECM may need to be replaced afterwards, or be insulated against these temperatures.

Scan Tool

Normally, the ECM is diagnosed with a scan tool which is interfaced to the computer command control system. The system can, however, be checked using an ordinary DMM.

The scan tool is designed to interface with the ECM, supplying a visual reading of most inputs to the ECM and some outputs. To understand the use of the scan tool, review the instructions supplied with it. The scan tool stores and displays codes reported by the ECM. These codes lead you to the area with the fault. These codes are most likely automobile specific, (GM codes are GM codes, etc.) and are not reproduced here.

Block Connector

Figure 1 shows a typical block connector which is connected to the ECM. This connector is usually found under the dash on the driver's side nearest the door and is called the Assembly Line Diagnostic Link (ALDL). There may be an access panel that has to be removed to get to the ECM connector. The various pins used are discussed as follows:

- Pin A is used as a ground for the other pins.

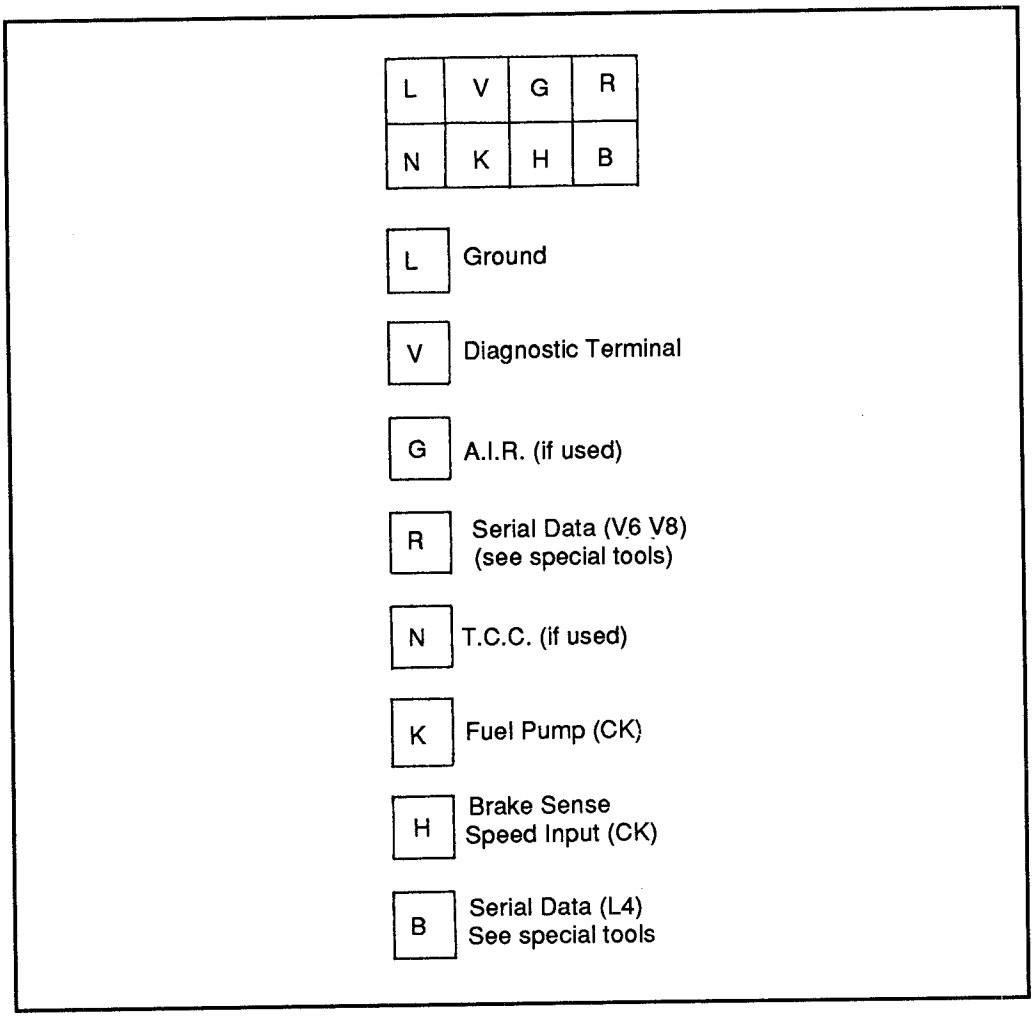

Figure 1: Terminal block for GM electronic control modules

- Pin B is the "diagnostic terminal". If this pin is grounded (connected to Pin A, the "Service Engine Soon" (SES) light will flash codes entering the Diagnostic Mode. This is done with the key turned on and the engine not running. If the engine is running, the light will flash Field Service information to determine if the system is in a "Closed Loop" or "Open Loop" operation mode.

- Pin C is used to diagnose some air management systems and is wired to the ground side of the electric air control valve.

- Pin E is the serial data line on many different types of vehicles and is used by the "Scan" tool to read various system data information.

- Pin F is used to diagnose the transmission converter clutch (TCC) system and is wired to the ground side of the TCC solenoid.
- Pin G is used to diagnose the fuel pump circuitry on many different vehicles. If not tested here, the test points will be in the engine compartment near the fuel pump relay.
- Pin H is used to check the braking system of many vehicles.
- Pin M is a serial data line used by the "Scan" tool to read various system data information.

Diagnostic System

The Electronic Control Module system has a diagnostic system built into it. If any problem in the engine has been detected while the engine is running, the "Service Engine Soon" light on the instrument panel will be lit. This light will also be used for a bulb and system check.

Alternate Testing Tools

Without the use of the "Scan" tool, these tests can be done with the use of a tachometer, test light, DMM with 10 MΩ impedance, a vacuum gauge and various jumper wires.

Codes

The various codes that may be reported (either by using the "Scan" tool, or the "Service Engine Soon" light) are listed below. Note that these codes do not apply to all vehicles.

CODE	CIRCUIT	CAUSED BY
12	ECM	Diagnostic mode.
13	O_2 Sensor	The oxygen sensor circuit or sensor was open for one minute when off idle. Could be an open oxygen sensor circuit.
14	Coolant Sensor	High temperature indication. The sensor or signal line becomes grounded for 3 seconds.
15	Coolant Sensor	Low temperature indication. The sensor, connections, or wires open for 3 seconds.
21	Throttle Position Sensor (TPS)	Signal voltage high. TPS voltage greater than 2.5 V for 3 seconds with less than 1200 rpm.
22	TPS	Signal voltage is low. A shorted (to ground) or open signal circuit will produce code in 3 seconds.
23	Manifold Air Temperature Sensor (MAT)	Low temperature indication. Occurs when connections or wires are open for 3 seconds.

CODE	CIRCUIT	CAUSED BY
24	VSS	No vehicle speed present during a road load deceleration.
25	MAT	High temperature indication. Signal line becomes grounded for 3 seconds.
32	Exhaust Gas Recirculation (EGR)	Vacuum switch shorted to ground on start-up. Switch not closed after the ECM has commanded EGR for a designated period of time. EGR solenoid circuit open for a designated period of time.
33	Manifold Absolute Pressure Sensor(MAP)	Low Vacuum. MAP sensor output to high for 5 seconds or an open signal circuit.
34	MAP	High Vacuum. Low or no output from sensor with engine running.
35	Idle Air Control (IAC)	IAC error.
42	Electronic Spark Timing (EST)	ECM has detected an open or grounded EST or Bypass circuit.
43	Electronic Spark Control (ESC)	Signal to the ECM has remained low for too long or the system has failed a functional check.
44	Lean Exhaust Indicator	Oxygen sensor voltage remains below 0.2 V for about 20 seconds.
45	Rich Exhaust Indicator	Oxygen sensor voltage remains above 0.7 V for about 1 minute.
51		Faulty MEM-CAL, PROM, or ECM.
52		Fuel CALPAK missing or faulty.
53		System over voltage. Indicates a basic generator problem.
54	Fuel Pump	Low voltage. Fuel pump voltage is less than 2 V when reference pulses are being received.
55	Computer Control Module	Faulty ECM.

Bulb Check

With the ignition switch turned on, and the engine not running, the "Service Engine Soon" light should be on. This indicates that the ECM has made a complete circuit to turn the lamp on. If the lamp does not come on, the bulb will need to be replaced. Refer to the service manual for proper removal and replacement of the bulb.

System Check

The system check will be done by using the ALDL connector found under the instrument panel. Terminal B (diagnostic terminal) should be jumpered to

terminal 1 (ground). The ECM will enter either the diagnostic mode or the field service mode.

Clearing Codes

When the ECM stores a code, the "Service Engine Soon" light will come on and a code is stored in memory. If the problem is intermittent, the light will go out after 10 seconds as the fault disappears. The code will be stored in memory for 50 engine starts, or until the battery voltage has been removed for at least 30 seconds. Codes will need to be cleared after any repairs have been made. Some diagnostic charts will tell you to clear the codes prior to using the chart. This allows for locating errors faster.

The ECM can be easily damaged when connecting/disconnecting power. The key switch should be off when removing power (either by the battery cable, ECM pigtail, ECM fuse, etc.).

Diagnostic Mode

The diagnostic mode has been entered when the ignition is on and the engine is stopped. Terminal A and B are jumpered together. The "Service Engine Soon" light will flash a code 12 to indicate that the diagnostic system is working. This coding is done in a sort of Morse code fashion. The light will blink once for the tens column, pause, then blink twice for the ones column. This code will be repeated three times and will continue to repeat if no other codes have been stored in the ECM.

Any other stored codes will then be flashed. An example of this would be code 54. This would indicate a problem with the fuel pump. The light would flash five times, then a short pause and flash four times. Each code will flash three times, and then return to the code 12 and start the cycle over again. Refer to the code chart listed above for meanings of various codes.

Codes can be obtained only when the engine is not running and the ignition is on. All computer-controlled relays and solenoids are energized in the Diagnostic Mode with the exception of the fuel pump relay.

Field Service Mode

If terminal B is grounded to terminal A when the engine is running, the system will enter the Field Service mode. The "Service Engine Soon" light will show whether the system is in the "Closed Loop" or "Open Loop" mode, and if the fuel system is operating normally.

With the terminals grounded, the engine at normal operating temperature, and running at 1400 to 1600 rpm for at least two minutes, the light can be checked.

When the fuel system is operating normally and the system is in a "Closed Loop" mode, the light will be flashing at a rate of once per second. If the light is flashing at 2.5 times per second, the fuel system is in an "Open Loop" condition. This indicates that the oxygen sensor voltage signal is not being properly sent to the ECM.

The system will flash "Open Loop" after the engine starts for 30 seconds to 2 minutes or until the sensor reaches normal operating temperature. If the system fails to go to a "Closed Loop", the fuel pump may need repair work, or sensor replacement.

If the light remains on most of the time, it indicates that the exhaust is rich. The oxygen sensor signal voltage will be above 0.55 V and steady. This will be indicated by a code 45.

If the light remains off most of the time, it indicates that the exhaust is lean. The oxygen sensor signal voltage will be less than 0.35 V and steady. This will indicate a code 44.

ECM Replacement

When the automobile key switch is turned on, the ECM begins a diagnosis of all items within its control, including itself. The code system will indicate a failure of a specific circuit, or the ECM. If the ECM fails and needs replacing, it will give a code 55.

If the ECM was replaced and the error was not corrected, the following information may be the cause:

- A shorted solenoid, relay coil or harness may cause a ECM fail. A short test should be used to test the connection harness.
- The PROM / MEM-CAL could have possibly failed. It operates as part of the ECM and may need to be replaced. A bad PROM or MEM-CAL installation error will usually return a code 51.
- An incorrect PROM/MEM-CAL application can cause malfunctions and may or may not send a code.
- The connector at the ECM may be the problem and need to be removed and checked.
- The new ECM may be faulty.

ECM Intermittent Codes

An intermittent code means that a code is stored in the memory, but the circuit is OK. Most intermittent problems are caused by faulty electrical connections or wiring. Careful checking of the wiring associated with the problem area will need to be done. Check the wiring diagrams in the service manual for the specific vehicle.

There could be a poor mating of the connector halves, or the terminals are not fully seated in the connector body. Ensure that the connectors are making good contacts and are not being inhibited by some foreign object or have other gapping problems.

If the problem cannot be located, connect a DMM to the suspected circuit and measure the voltage while operating the vehicle.

If there is a loss of a code in memory, you will need to disconnect the TPS and idle the engine until the "Service Engine Soon" light comes on. Code 22 should be stored and kept in memory after the ignition is turned off for at least 10 seconds. If this doesn't happen, the ECM is at fault.

A defective relay, solenoid, or switch may cause electrical system interference to occur. There will usually be a sharp electrical surge present. The problem will most often be found when the faulty component is operating. Improperly installed electrical components (lights, radios, CD-players, etc.) could be the cause of the problem.

8/TR - ECM
Electronic Control Module

8/TR - ECM - CL
Code Listings

Step-By-Step Instructions For Code Listings

Many of the various Electronic Control Module (ECM) codes are listed below and with step-by-step instructions to locate the problem. The codes chosen will work for a variety of makes and models of GM vehicles. They may or may not work for all models. These are example steps to help in troubleshooting various electronically controlled devices and sensors to be found in a vehicle.

Oxygen Sensor Circuit Code 13

Code 13 is sent for errors in the oxygen sensor circuit for all GM engines. This will occur with the engine at normal operating temperature. The terminals A and B are shorted and the engine is in the Field Service Mode. The engine should be run at 1200 rpm for one minute. View the "Service Engine Soon" light.

If there is a flashing "Open Loop" condition (flashes at a rate of 2 times per second), the ignition should be turned off. The oxygen sensor should be disconnected, and connector circuit 412 should be jumper harnessed to ground. Start the engine and observe the SES light. If it flashes "Open Loop" for about 1 to 4 seconds, then goes OFF for at least 30 seconds, the oxygen sensor or connector is bad and should be replaced.

If the "Open Loop" test doesn't happen, turn the engine off but leave the ignition switch on. Check the voltage of circuit 412 (refer to the service manual for the location of this) at the O_2 sensor harness connector using a DMM. The reading should be 0.3- 0.6 V (300-600 mV). If the voltages check out, the fault could be the ECM and not the oxygen sensor, an open circuit 413, or open circuit 412.

When the flashing code indicates a "Closed Loop" (flashes at 1 time per second), refer to the intermittent codes section discussed above. Intermittent responses are discussed for some of the codes listed, but not for all. The intermittent problem can occur for any of the codes that can be reported.

Coolant Temperature Sensor Circuit - Code 14

Run the engine for at least one minute, or until the SES light comes on. Turn the ignition switch off from the Run position so the engine stops. Do not turn the key all of the way off, as this will clear the code. Ground terminals A and B on the ALDL and note the code.

If the code is 14, turn the ignition off to clear the code. Disconnect the coolant sensor. Start the engine and run for 1 minute or until the SES light comes on. Turn the ignition switch to the ignition on and engine stop mode. Connect the ALDL terminals A and B. If there is still a code 14, check to see if circuit 410 is shorted to ground, or circuit 410 is shorted to a sensor ground circuit or a faulty ECM. If the code is code 15, replace the faulty coolant sensor.

Coolant Temperature Sensor Circuit - Code 15

Begin with the engine off (to clear codes 14 and 15) and the ALDL terminals A and B not shorted. Start the engine and run for 1 minute or until the SES light comes on. Turn the ignition to the on mode with the engine stopped. Connect terminal A and B of the ALDL. Note the code from the SES.

If the code is 15, turn the ignition off to clear the codes. Disconnect the coolant sensor connector. Jumper the harness terminals together. Start the engine and run for 1 minute, or until the SES light comes on. Turn the ignition key to the ignition on and engine stopped position. Connect terminal A and B of the ALDL and note the code on the SES.

If the code is 15, leave the ignition on, and the engine stopped. View the coolant sensor harness circuit 410 with a DMM and check for voltages between 4 and 6 V. If found, the sensor ground circuit is open or the ECM connection is faulty or the ECM is bad. If the voltage is not found, circuit 410 is open or faulty or the ECM connector or ECM is bad.

If the code is14, the coolant sensor connection, or coolant sensor is bad. Replace the sensor and/or check the connection.

Throttle Position Sensor Circuit - Code 21

For this test, the engine should be at normal operating temperature. The ALDL terminals A and B should not be connected. Turn the engine off to clear codes. Start the engine and idle in the neutral position with the AC off. Do this for 1 minute, or until the SES light comes on. Turn the key to ignition on, and the engine stopped. Connect terminals A and B of the ALDL and note the code.

If the code is 22, check the TPS sensor ground harness connector with a test light hooked to 12 V. If the light is on, the TPS connector or sensor is bad. If the light is off, there is an open sensor ground, bad connection or bad ECM.

If the code is 21, check to see if circuit 417 is connected to a voltage source or if the ECM is faulty. If there is no code 21 or the problem is intermittent, or if no other code is stored, refer to Section *"8/TR-ECM"* Page 7.

Throttle Position Sensor Circuit - Code 22

For this test, the engine should be at normal operating temperature. The ALDL terminals A and B should not be connected. Turn the engine off to clear codes. Start the engine and idle in the neutral position with the AC off. Do this for 1 minute, or until the SES light comes on. Turn the key to the ignition on, and with the engine stopped. Connect terminals A and B of the ALDL and note the code.

If the code is not 22, or the problem is intermittent, or if no other code is stored, refer to Section *"8/TR-ECM"* Page 7.

If the code is 22, disconnect terminals A and B. Turn the ignition off to clear the codes. Disconnect the TPS and jumper a 5 V reference circuit to the TPS signal circuit at the harness connector. Start the engine and idle as before. After the SES light has lit, shut off the engine and turn the ignition switch to on. Note the code.

If the code is 21, adjust the TPS (if adjustable) to manufacturer specifications. If no adjustment is possible, replace the TPS.

If the code is 22, remove the jumper and check for a 5 V reference signal from the ECM at the TPS harness connector F. If the voltage is 4 to 6 V, there is an open or short to ground in the signal circuit or a faulty connector or ECM. If the voltage is below 4 V, there is an open or short to ground in the 5 V reference circuit, a faulty connection, or bad ECM.

Vehicle Speed Sensor Circuit - Code 24

The type of vehicle speed sensor must be determined before continuing, otherwise a misdiagnosis might occur. This code can be disregarded if it occurs when the drive wheels are not turning.

To check the speed sensor, the speedometer should be functional, as should the cruise control. If either of these items is experiencing problems, they should be corrected first. Shut off the cruise control. Since the drive wheels must be turning, they will have to be lifted. If this is not possible, the test will have to be conducted while driving the vehicle.

You will be probing the ECM connector with a DMM, checking for a voltage on circuit 437. Start and idle the engine in the "Drive" mode. The voltage reading should be a varying voltage between 1 and 6 V.

If the voltage is less than 1 V, check circuit 437 for a short to ground. Check the ECM for a poor connection.

If the voltage is 5 to 12 V and steady, check circuit 437 for an open. If circuit 437 and the ECM connections check out OK, check for a bad vehicle speed sensor or buffer assembly. Refer to the electrical section of the chassis service manual for the vehicle under test.

Map Sensor - Code 33

This code indicates when the signal voltage is high. The engine should not have a rough, unstable, or incorrect idle before this check. If so, correct it first.

Start with the ignition switch off to clear any codes. Do not connect any terminals on the ALDL. Start the engine and run for 1 minute or until the SES light comes on. Turn the key to the ignition on and engine stopped mode. Connect terminals A and B together. Note the code.

If the code is 33, turn the ignition off to clear the codes. Disconnect the MAP sensor electrical connector. Disconnect terminals A and B. Restart the engine and run for 1 minute or until the SES light comes on. Shut off the engine and turn the ignition on. Connect terminals A and B of the ALDL.

If code 33 is present, it means the signal circuit is shorted to the voltage side, or the ECM is bad.

If code 343 is present, check for a plugged or leaking sensor vacuum hose. If the vacuum hose is OK, there is an open in the sensor ground circuit or a faulty sensor.

Map Sensor - Code 34

This occurs when the signal voltage is low. Start with the ignition off to clear any codes. The ALDL A and B connectors are not jumpered. Start the engine and run for 1 minute or until the SES light comes on. With the engine off and the ignition on, connect A and B of the ALDL.

If a code 34 is found, turn the ignition off to clear the codes. Disconnect the MAP sensor and jumper the harness connector terminal B to C. Start the engine and run for 1 minute, or until the SES light is on. As usual, shut off the engine and turn on the ignition. Connect A to B on the ALDL and note the code. If the code is 33, replace the sensor.

If the code is 34, remove the jumper from terminal B to C of the harness. Check for voltage between the harness connector terminal A and C using the DMM. If the voltage reading is between 4 and 6 V, there may be an opening in the MAP signal circuit 432, a short to ground in circuit 432, or a faulty ECM connector or ECM.

If the voltage is below 4 V, there may be an open in the 5 V reference circuit 416, a short to ground in circuit 416, a short between circuit 455/469 and circuit 416, or a faulty ECM connector or ECM.

Electronic Spark Timing Circuit - Code 42

Begin with cleared codes. Idle the engine for about 1 minute or until the SES light comes on. With the engine off and the ignition on, connect A to B on the ALDL.

If code 42 is present, turn the ignition off and disconnect the ECM connectors. Turn the ignition on. Use the DMM in the ohms range to measure between 1000 and 2000 Ω. Check the ECM harness connector circuit 423 with the DMM and ground. It should have a reading of 500 Ω or less. If it does not, there is an open circuit 423, a faulty connection or faulty ignition module. Replace the defective component.

If there is a reading of 500 Ω or less, check the ECM harness connector circuit 424 with a test lamp connected to 12 V and note the reading.

If the test lamp is on, disconnect the ignition module 4-way connector and see how the light reacts. If the light stays on, the circuit 424 is shorted to ground. If the light goes off, there is a faulty ignition module.

If the lamp is off when checking circuit 424 with the test light, check the ECM harness again with the DMM to circuit 423 and ground. Reconnect the lamp to 424 and see if the ohms reading goes from under 500 to well over 5,000 Ω.

If the reading does not increase to greater than 5,000 Ω, disconnect the ignition 4-way connector and read the meter. The resistance should have gone high (an open circuit.) If so, there is a faulty connection or faulty ignition module. If not, circuit 423 is shorted to ground.

If the ohms reading climbed to over 5,000, reconnect the ECM and idle the engine for one minute or until the SES light comes on. If the light is on (code 42) there is a faulty ECM.

8/TR - PS
Power Systems

8/TR - PS - BS
Battery Systems

Introduction

The primary area to be checked before any others, must be the power section of the automobile. If the power section is not working, or is working improperly it could be caused by the battery or alternator system.

Electrical Systems Diagnostic

The battery is the main source of power for the automobile. Automobiles are based on a 12 VDC power system. The engine electrical system diagnosis includes checking the battery, charging system (generator and related wiring), cranking system (starter and related wiring), ignition system (distributor, spark plugs and wiring) and the glow plug system for diesel electrical systems.

Basic Functions

The battery has three basic functions in the electrical system. It provides the source of power needed for cranking the engine, acts as a voltage stabilizer for the electrical system, and can (for a limited time) provide the power needed when the electrical load used exceeds the output of the generator.

Sealed Battery

Most vehicles today use a sealed battery (or semi-sealed battery) in their electrical system. These batteries are intended to be maintenance free (or relatively so). The battery may have no filler caps in the cover - no openings at all except for a small vent hole. This vent allows small amounts of gases produced by the battery to escape. These gases can be explosive if exposed to open flames. Never check a battery using a lighter or other open flame as a light source. For the same reason, never smoke around a car battery, especially a charging one. (When charging, the level of these gases increases.)

Hydrometer

The tool used to test a battery is the hydrometer. This device has a green ball that rises or falls depending on the specific gravity of the electrolyte. If the ball shows in the viewing window, the charge of the battery is at 65% or greater.

If the battery is of the sealed-type, it may have a built-in hydrometer or other indicator. A green dot will be visible within the view window when the charge

is 65% or more. If there is a dark green, or no visible color, the charge is below 65%. The battery should be charged until the green dot appears in the view window. (The battery may need to be shaken slightly to make the green ball appear).

If the indicator is clear or light yellow, it means the fluid level has dropped below the bottom of the hydrometer. This could be caused by a leaking broken case, the battery tipping beyond 45°, normal wear-out, or overcharging because of a problem in the electrical system. Check the system and/or replace the battery.

Battery Ratings

Batteries are rated according to their reserve capacity in minutes and their cold cranking power in amperes. Both of these methods involve measuring the battery terminal voltage after a specified time period and discharge current. The reserve capacity is the length of time it is possible to travel at night with the minimum electrical load and no generator output. It is expressed in minutes and refers to the time required for a fully charged 12-V battery at a specific temperature (80° F) to be discharged at a constant current (25 A) to reach a terminal voltage of 10.5 V. The cold cranking ampere test measures the amperage supplied by the battery at 0° F for 30 seconds.

Checking the Battery

The battery should be periodically checked (monthly) for obvious damage like cracked or broken casing or a cover that allows for leaking to occur. In the event there is leaking or cracking, the battery must be replaced.

Electrolyte Levels

In batteries that have fill holes and even in some maintenance free batteries, the levels of the electrolyte (water mixed with sulfuric acid) should be checked monthly, especially in warmer climates. The electrolyte levels in each of the six cells should be just above the metal plates, or slightly higher. Each cell of a battery supplies a little more than two V.

Load Testing

Testing Procedure

The battery should be disconnected from the automobile to do a load test. Install an adapter for screw terminal batteries (like the AC-Delco ST 1201 or equivalent), or use 3/8" bolts in the screw holes. Do not over tighten the screws—turn only until the screw does not turn anymore. Install a voltmeter and battery load tester to the adapters. Remove the surface charge of the battery by applying a 300-A load across the adapters for about 15 seconds. Turn the load off and wait 15 seconds for the battery to stabilize.

Apply the specified load selected from the specifications chart for the battery and observe the battery voltage after 15 seconds with the load connected. Then, turn off the load. If the battery voltage does not drop below the minimum voltage as shown in the following list, the battery is good and can be returned to service.

Minimum Voltage List

Temperature	Minimum Voltage
70° F & above	9.6 V
60° F	9.5 V
50° F	9.4 V
40° F	9.3 V
30° F	9.1 V
20° F	8.9 V
10° F	8.7 V
0° F	8.5 V

If the battery passes the load test, it is in good condition and no further testing is necessary. If it fails the load test, perform an open circuit voltage test to see whether the battery should be charged or replaced.

Open Circuit Voltage Test

When the battery fails the load test, the state of charge will need to be checked. Open circuit or no load voltage is a good measurement of the charge after the battery has stabilized. This will take a couple of minutes of rest with open circuits after the load test has been completed.

The change of voltage with charge is small and most battery testers use special voltmeters with scales expanded to better show the percentage charged. If the charge is at 75% (12.4 V or more), the battery is considered charged and should not be charged further. If it failed the load test but has a 75% or better reading, the battery should be replaced. If it is under 75%, it should be charged and load tested again. If the load test fails again, the battery must be replaced.

Load testing and open circuit testing can be done by your local automotive parts dealer and is usually free. They can quickly determine if you need to replace or charge the battery. Often, they can quickly recharge your battery and redo the tests.

Battery Recharging Procedures

Warning!

When batteries are being charged, an explosive gas mixture forms beneath the covers of each cell. Do NOT smoke near batteries on charge or which have recently been charged. A spark can occur where the live circuit is broken. All open flames must be kept away from the battery.

Safety Precautions

When you must charge a sealed battery, take the following safety precautions:

- Do not charge the battery if there is a green dot visible, except immediately following a prolonged cranking.
- Do not charge the battery if the hydrometer reading is light yellow. Replace the battery.
- If the battery feels hot (125° F), or if there are violent gases or a spewing of electrolyte through the vent holes occurs, discontinue charging immediately. This is an indication that an explosive condition is developing.
- Batteries should only be charged until the green dot appears in the hydrom eter. A slight tipping or shaking of the battery may be necessary to make the green dot appear.
- For the best results, the batteries should be charged while the electrolyte and plates are at room temperature. A battery that is extremely cold may not accept current for several hours after starting the charger.
- Charge the battery until the green dot appears. Check the battery every half hour when charging.
- After charging, the battery should be load tested.

Charging Time Required

The time required to charge the battery depends on several things.

Battery charger outputs determine how long a completely discharged battery will take to charge. A one ampere current, for example, can take 72 hours or more to charge even a medium-sized battery that has completely discharged. (A larger battery may require as much as twice as long as a smaller battery.)

The temperature of a battery at 0° F will take longer to charge than a battery at 80° F. If a fast charger is connected to a cold battery, the current will be accepted more slowly at first, then will increase over time as the battery warms.

The state of the charge will depend upon how drained the battery really is. Electrolyte is nearly pure water and a poor conductor in a completely discharged battery, so current is accepted very slowly at first.

To charge a very low battery (or one that is completely discharged) the following steps should be taken. Failure to do so may cause charging damage and ruin what was a perfectly good battery.

Charging Procedure

Measure the voltage at the battery terminals with a DMM. If the voltage is 10 V or below, the charge current will be very low. It could take some time before the battery accepts a current in excess of a few milliamperes. Such low current may not be detectable on ampmeters built into many chargers.

Set the battery charger on the highest setting (if it has one). Make sure that the polarity is correct. Some chargers feature polarity protection circuitry which will prevent charging unless the charge leads are connected to a battery's terminals correctly. A completely discharged battery may not be able to activate this circuitry so do not put your trust in it.

A completely discharged battery must be recharged for a sufficient number of ampere hours (AH) to restore it to a usable level. As a general rule of thumb, this may be calculated from the reserve capacity (RC) rating of the battery. For example if a battery has an RC of 75, and a 25 A charge is applied, the charge time becomes 3 hours.

After any battery charge with this method, it is best to perform a load test to ensure proper useability.

8/TR - PS
Power Systems

8/TR - PS - CS
Charging Systems

Introduction

The charging system consists of the battery, the generator (or alternator), the regulator, and the charging system indicator lamp. The generator/alternator supplies the electrical power required for charging the battery and operating the accessories of the vehicle.

With many charging systems, the voltage regulator is a separate unit. With others, such as most GM-based generators, the regulator is integral (built-in). In the latter case, if the regulator malfunctions, the generator will need to be replaced as a whole. Figure 1 shows a typical generator. It is controlled by a conventional fan and pulley system in the automobile. There is an internal fan cooling system, rectifier bridge and regulator system.

The regulator voltage settings vary with temperature, and limit the voltage by controlling the rotor field current. The regulator switches the rotor field current on and off at a fixed frequency of about 400 cycles per second. By varying the on/off time, a correct average field current for proper system voltage control is obtained.

The charge indicator is usually found on the instrument panel as a battery symbol. This display will light when the ignition is first switched on and goes out when the engine is running. If the charge indicator is on with the engine running, a charging system problem is indicated. The indicator will glow at full brilliance if any charging problem occurs or if the system voltage is too high or too low.

Noisy Generator

Noise from a generator may be caused by a loose drive pulley, belt, mounting bolts, worn or dirty bearings, or a worn stator. If the pulley, belt and mounting bolts are snug, yet the noise continues, the generator will need to be replaced. This is usually a simple matter of unplugging the connectors, loosening the mounting bolts, and installing the new generator by reversing the steps.

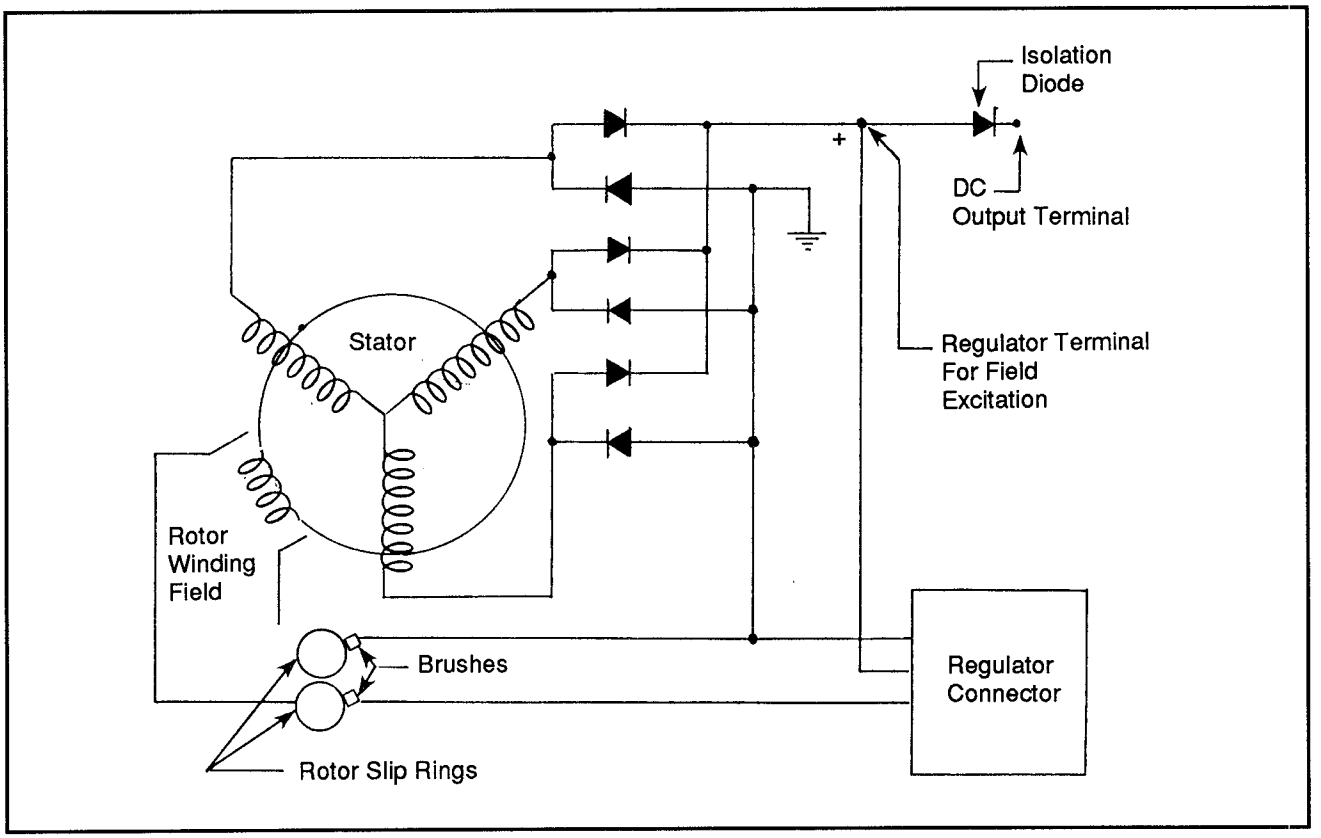

Figure 1: Typical generator

Testing the Generator

The wiring and generator belts must be working properly before making any test on the generator. Also, the battery should be fully charged and connected properly. To avoid damage to the vehicle's electrical system:

- Do not polarize the generator.
- Do not short across or ground any of the terminals in the charging circuit except as specified in any instructions.
- Never operate the generator with the output terminals disconnected.
- Make sure the generator and battery have the same ground polarity.
- When connecting a charger or booster battery to the vehicle battery, connect negative to negative and positive to positive. Also, when charging a battery, remove one lead of the battery from the system to avoid generator damage.

Trouble Indication

Trouble in the charging system will show up as one or more of the following conditions:

- Abnormal indicator lamp operation.
- An overcharged battery which may be spewing electrolyte from the vents.
- An undercharged battery as indicated by the hydrometer readings, poor starting and other symptoms.

A basic wiring diagram for a charging system is shown in Figure 2. When the generator operates normally, the vehicle battery lamp will only be on when the automobile is started and then go out. An undercharged battery is often a sign that some accessory has been left on for a period of time. Check this out before wasting time testing the system.

Visual Inspection

Testing of the generator first begins with a visual inspection of the belt for wear and proper tension. The service manual will designate the proper tension required, but will typically not have more play than a quarter of an inch in either direction. An electrical test and load test of the generator can easily be performed by your local automotive parts dealer and will cost little or nothing.

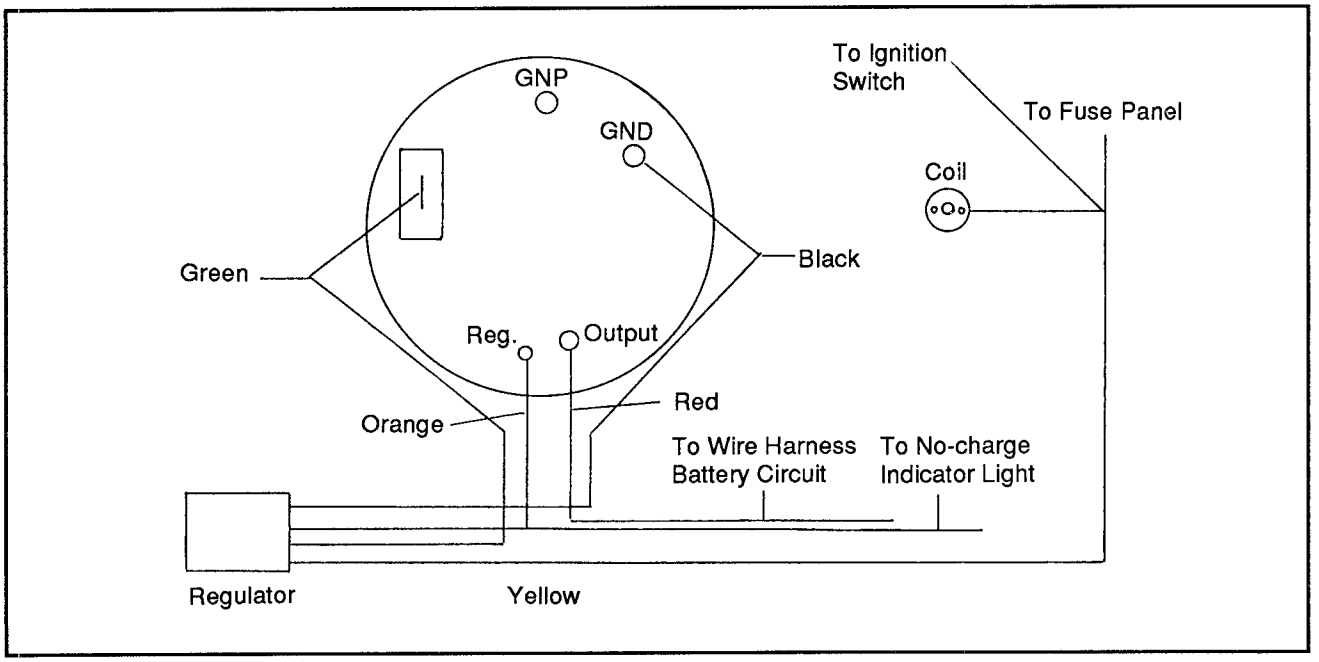

Figure 2: Generator wiring diagram

Battery Lamp "ON"

With the ignition switch on and the engine stopped, the battery lamp should be on (in systems with an indicator lamp). If the indicator fails to light, detach the wiring harness at the generator and ground the "L" terminal lead. If the lamp lights, replace the generator. If the lamp does not light, locate the open circuit or replace the lamp.

Battery Lamp "OFF"

With the ignition switch on and the engine running at a moderate speed, the lamp should be off. If not, detach the wiring harness at the generator. If the lamp goes out, replace the generator. If the lamp stays on, check for a grounded "L" terminal wire in the harness.

Battery Undercharged/ Overcharged

If the battery is undercharged or overcharged, detach the wiring harness connector from the generator. With the switch on and the engine not running, connect the DMM from ground to the "L" terminal of the wiring harness, and to the "I" terminal (if used). A zero reading indicates an open circuit between the terminal and the battery. Correct as required.

Connect the harness connector to the generator and run the engine at a moderate speed with all the accessories turned off. Measure the voltage across the battery. The reading should be above 16 V. If not, replace the generator.

Connect an ammeter at the generator output terminal and turn on the accessories. Load the battery with a carbon pile to obtain a maximum current draw. The voltage reading should still be continuous at 13 V or above. If it isn't, or if the current output (in amperes) of the generator is lower than the full-load rating, replace the generator.

This concludes the battery and charging system checks. These checks should always be done before continuing with any other electrical problem tracing in automobiles. Most systems are dependent on a good working battery and generator/alternator. If these are bad, they must be fixed or replaced before proceeding with any other steps.

8/VCS - Al
Alpine

8/VCS - Al - PCS
7293 Pull-Out Car Stereo

Curing a Stereo Installer's Headache

In this case study, a professional installer brought an Alpine 7293 pull-out car stereo into the shop. He simply stated that the unit didn't work and knew nothing else. The stereo was in pretty good condition; there were no signs of serious abuse to the chassis or the face.

Initial Repair Procedure

We began our repair procedure by applying power to the stereo to see what would happen. Nothing happened. The unit's face did not light nor was anything coming out of the speakers. When we inserted a tape, however, we could hear the motor spinning and the tape moving. This was an indication that some power was getting to the unit. A top view of the stereo, indicating all its significant parts, is shown in Figure 1.

Remove Screws

We removed the appropriate screws and lifted out the entire radio from its chassis. Then we removed the connector on the sleeve and plugged it directly into the back of the unit. The connector on the sleeve must be removed because testing is not possible with the sleeve on and power can only be applied via the sleeve connector. If no sleeve is supplied with the radio, Alpine sells the appropriate connector. In a worst case scenario, examination of the connector from the inside of the unit can usually show which wires are which by their color and observing where they connect internally.

Check for Blown Traces

We took a good look at the bottom of the PC board for blown traces and burnt components. We saw that four surface mount components were charred and cracked. As a standard practice, checking the physical condition of the board and components can save time before diving into the troubleshooting process.

At this point, it was time to purchase a service manual from Alpine. Once you

notice blown surface mount components, a schematic is necessary to complete the repair. Trying to follow traces on these boards is impossible. Also, new components will have to be ordered and the only place to find the part numbers are within a service manual.

Repairing with the Service Manual

Using the component diagram and the schematic in the service manual, we identified the bad components as Q205 and Q206, two transistors associated with the muting circuitry, and D810 and D811, two diodes that feed the audio into the power amplifier chip.

We now removed the four screws securing the cassette mechanism to the board and extracted the mechanism, taking care when disconnecting the PC mounted

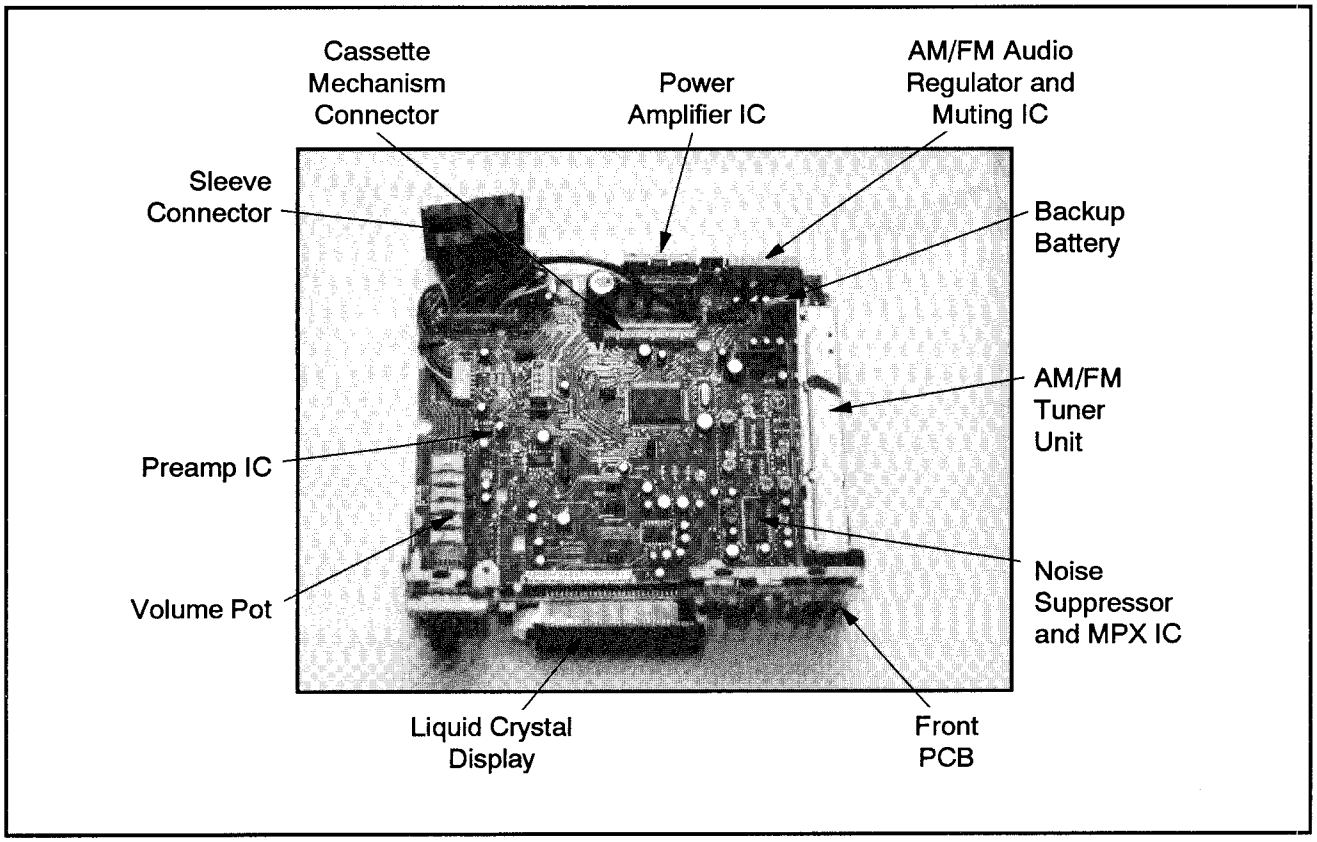

Figure 1: Top view of the car stereo with the cover and cassette mechanism removed

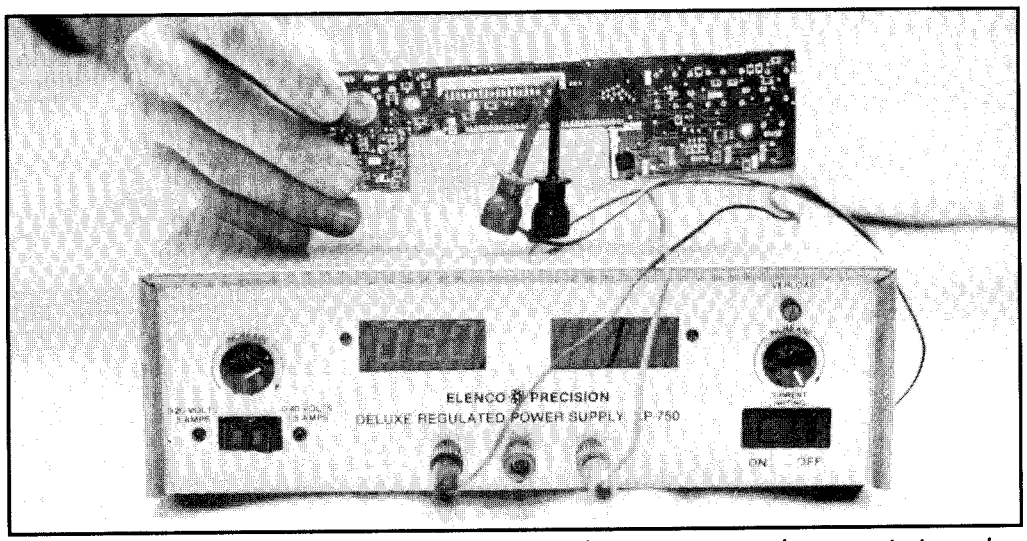

Figure 2: To test the bulb, we applied voltage from an external source to two pins of the front PC board connector.

connector. We applied power and directed a very bright, concentrated light (a small maglight) on the unlit display. We looked closely for any signs of LCD excitation.

Tackle Display Problem

Before troubleshooting the amplifier circuit, which obviously needs some attention since four components are blown in the audio signal's path, we thought the display problem should be tackled. Just because the display does not light does not imply that the CPU is not functioning. This particular display is a liquid crystal type, which means that it needs an external light source to be viewed. If you shine a bright light into the display and see numbers or letters, it means that the microprocessor is working. Sure enough, we saw the word TAPE on the display. This indicated a problem with the back lighting of the display, not the display processor itself.

Measure Voltage

We measured the voltage on pin 19 of the front PC board connector, CH401. Lack of power from the main PC board could have been the reason why the display was not lighting. If this were the case, it would mean that power supply problems existed within the unit. Pin 19 is a great place to start measuring, since the measured voltage tells you where to troubleshoot next.

To our surprise, 9 V was present at pin 19, with respect to the chassis. This meant that something on the front PC board was defective. We removed the two screws

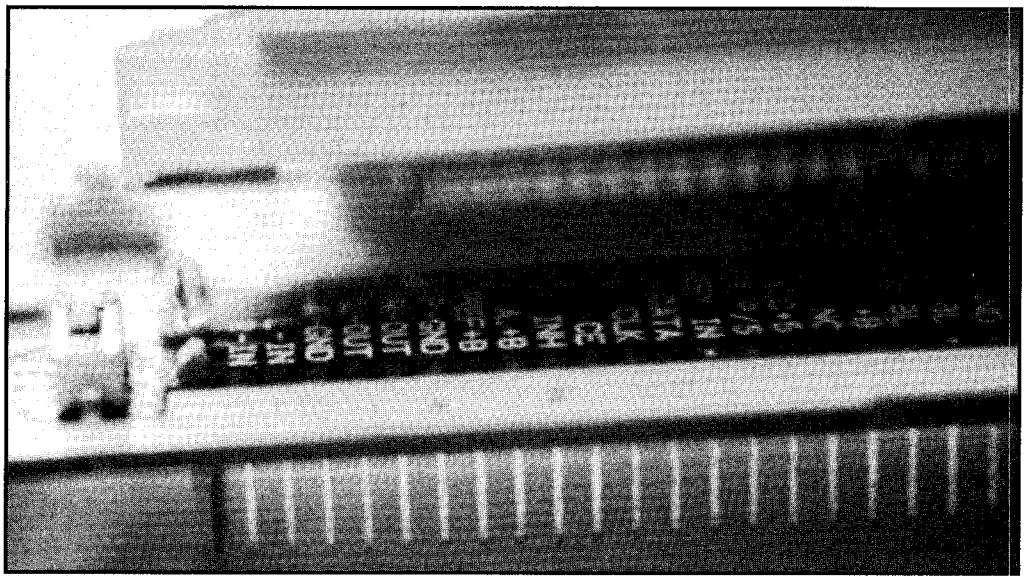

Figure 3: Closeup of the bulb that illuminates the liquid crystal display

holding the front PC board to the chassis and carefully pulled off the board. You have to be extra cautious when disconnecting the PC mounted connector.

Defective Bulb

A quick look at the schematic showed that PL401, the bulb that illuminates the back light of the display, is powered via resistors R407 and R408. We took a good look at these resistors. They looked fine, so we applied 9 V to pin 19 on the connector and observed the bulb (see Figure 2). We also measured the voltage across the bulb from the foil side of the board. As expected, the 9 V was present across the bulb's solder pads, which meant that the bulb was burnt out. Although we were confident before inspection and measuring that a dead bulb was the culprit here, taking a few seconds to check the resistors and measure the bulb voltage doesn't hurt.

Lift Display

We now needed to replace the bulb with an equivalent. In order to remove the bulb from the board, the display must be lifted (see Figure 3). There are two white plastic posts that secure the display to the board. They can be heated up with the soldering iron while pulling up. Another idea is just to carefully pry up the display and use a dab of hot-melt glue to re-secure it. Afterwards, you can reconnect the front PC board to the main board, apply power and see if the problem is fixed. In this case, after we replaced the bulb, the display illuminated the word TAPE.

Now that the display was working, it was time to pursue the next problem, the

amplification. We were able to begin troubleshooting before replacing Q205 and Q206 since these are only muting transistors and do not affect the operation. The RCA jacks are a great place to start the amplifier repair process. If you find audio signals there, you know that everything is operational up to and including the preamplifier. In this case, however, there was no sign of audio signals on the RCA jacks.

Remove Defective Components

We removed power from the unit and inverted it. Then we carefully desoldered and removed the four defective components. Whenever you do any desoldering, make sure not to lift the traces on the board by using too much heat. After removal, clean up the traces and make certain that no shorts exist from pad to pad.

We reapplied power and pushed the BAND button on the front panel to get the unit out of the tape mode and into FM. We also attached an antenna and tuned in a nearby FM station. Finally, we attached an external amplifier to the RCA jacks.

Verify Preamplifier Operation

Before troubleshooting the power amplifier, we needed to verify preamplifier operation. Since no signals were present on the RCAs, something before (or possibly including) the preamplifier chip must be bad. We prefer to use an external amplifier when checking preamp signals since attaching a speaker directly may be too much of a load for the preamplifier transistors to handle. Also, the signal may be too small to be distinguished from a speaker directly connected to the preamp.

We turned the volume knob to maximum and, using a high input impedance amplifier driving a speaker (using the RCA AUX input of a home amplifier is fine), probed for an audio signal on the PC board (see Figure 4). The best place to look is the volume pot. A glance at the schematic showed that pot #1 and pot

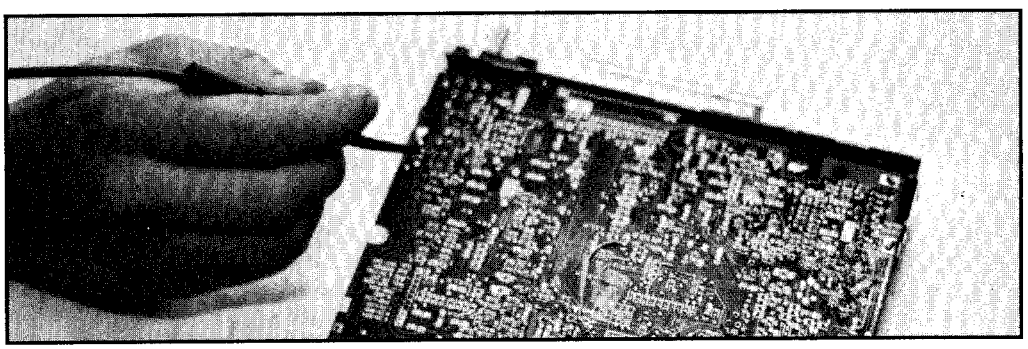

Figure 4: Searching for an audio signal on the volume pot

The Alpine 7293 car stereo as it arrived in the shop.	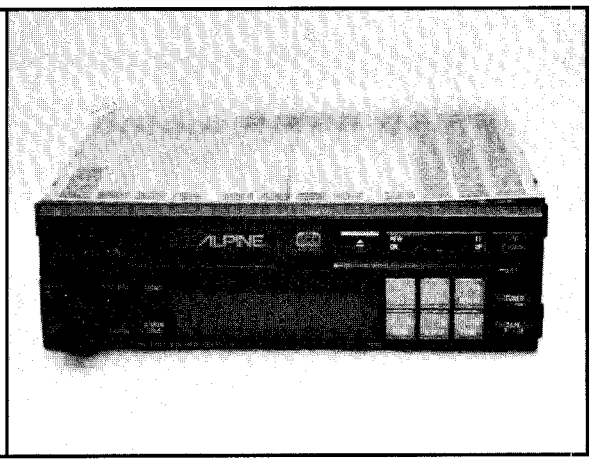
Removing the connector from the sleeve.	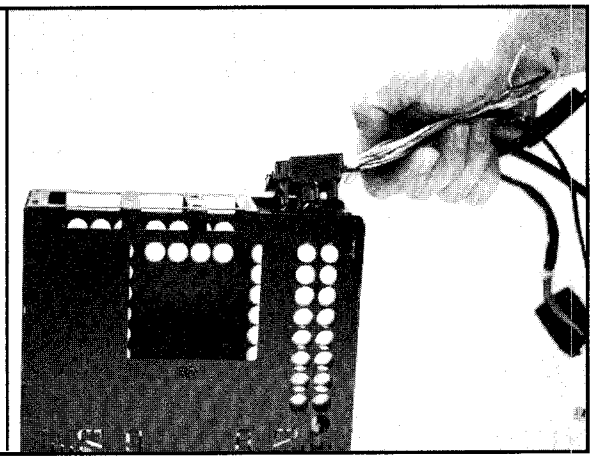
Removing the cassette mechanism from the base.	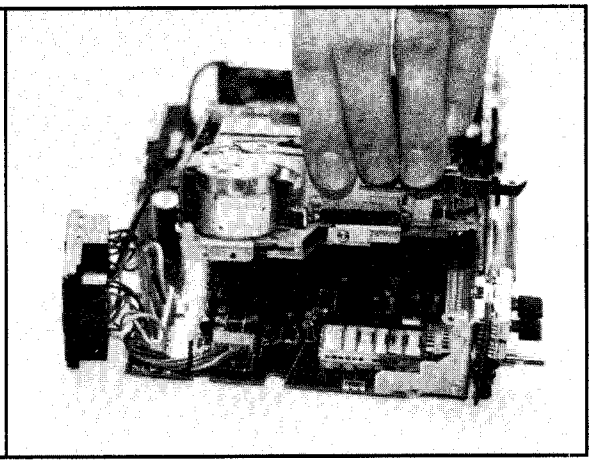

Removing the circuit board from the chassis.

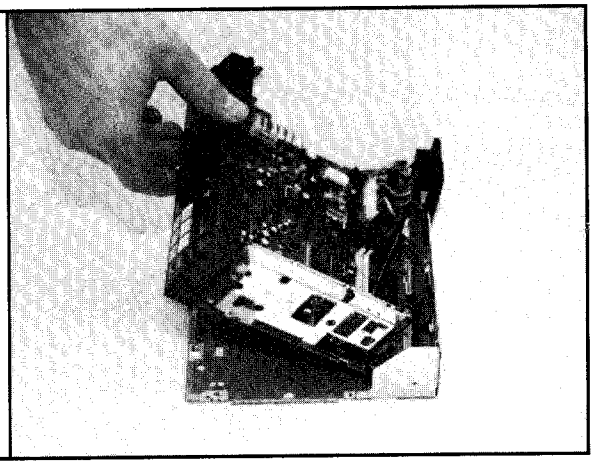

Removing the front PC board.

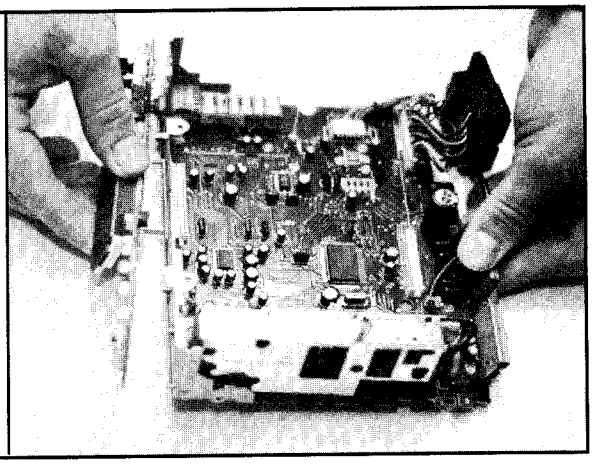

Soldering a new bulb into the board (back view).

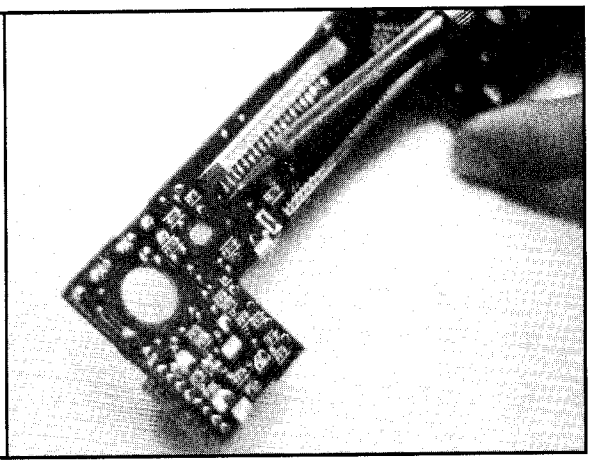

Gluing the display onto the PC board

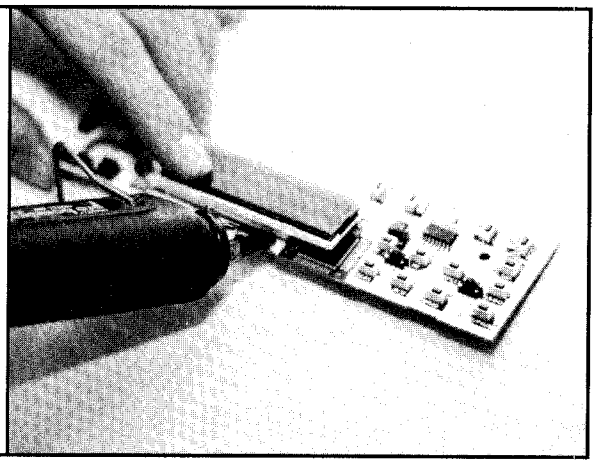

Measuring pin 14 of the amplifier IC to verify that the voltage is correct.

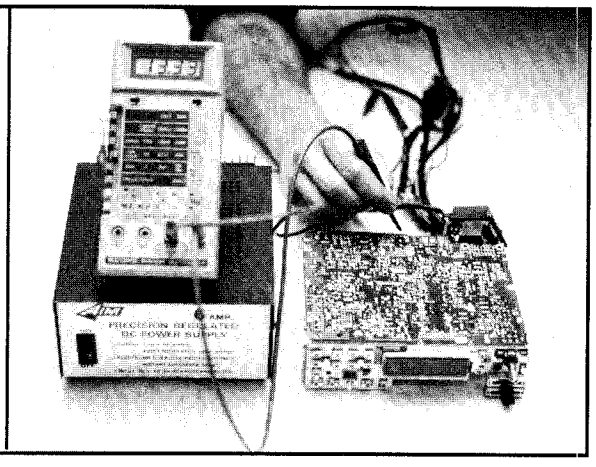

Replacing the amplifier IC.

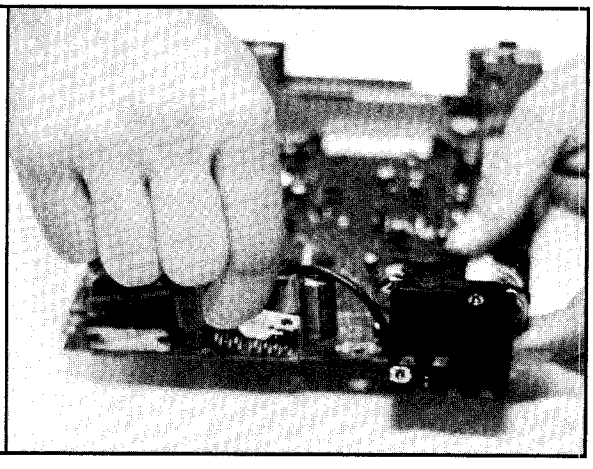

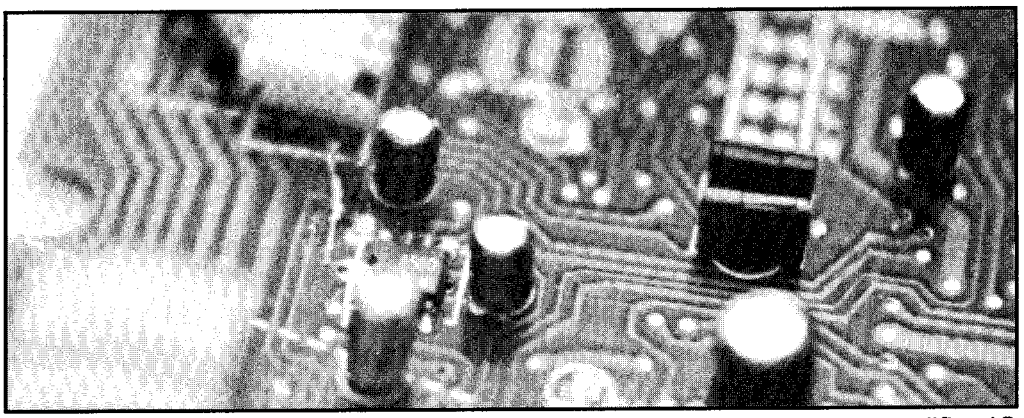

Figure 5: Closeup of the blown trace (now repaired) near the preamplifier IC

#2 should be checked since these are the first places the audio signal enters before the preamplifier. We were happily surprised to find a clean audio signal on both channels of the volume pot.

Trace Preamp Signal

Now that we located a good preamplifier signal, we needed to trace it through the circuitry until we found the problem. We placed the unit right side up and checked for audio signals on pins 3 and 5 of IC302, the inputs to the preamplifier. Naturally, if signals are found there (which they should be), then pins 1 and 7 of the same chip, the outputs of the preamplifier, should be checked next. In this case, we found that the signals at the inputs to the IC were fine; however, there

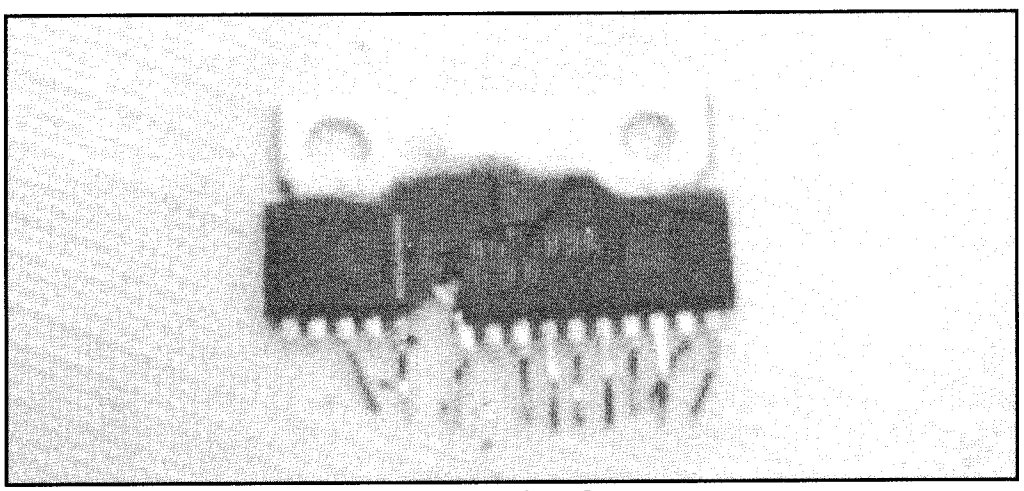

Figure 6: Closeup of the defective amplifier IC

was absolutely nothing leaving the preamplifier.

When there is something going into a chip and nothing coming out, either the power to the chip isn't there or the chip is bad. We checked for a ground on pin 4 and Vcc on pin 8 of the preamplifier chip. Although Vcc was present, the ground pin was floating around 5 V.

Check Manual

Using the exploded view of the PC board in the manual, we followed the trace that connects pin 4 to ground. Then we looked closely to see if the trace was burnt or broken. Sure enough, on the top layer of the board, we found a small break in the trace near the IC. We soldered a small jumper wire (see Figure 5) and rechecked for audio signals at the output of the preamp; they were there. We rechecked for signals on the RCA jacks. As expected, the audio was clear and undistorted. Another problem was fixed.

Replace Diodes

Before continuing any further with tracing the signal, D810 and D811 had to be replaced. These components were ordered from Alpine. Also, we removed the heat sink cover from IC301, the power amplifier, and found a nice big hole in it (see Figure 6). As a result, one of those had to be ordered, as well as the two muting transistors that burned. The cost came to $21.00 (including shipping) for the four surface mount components from Alpine. The AN7183 was purchased

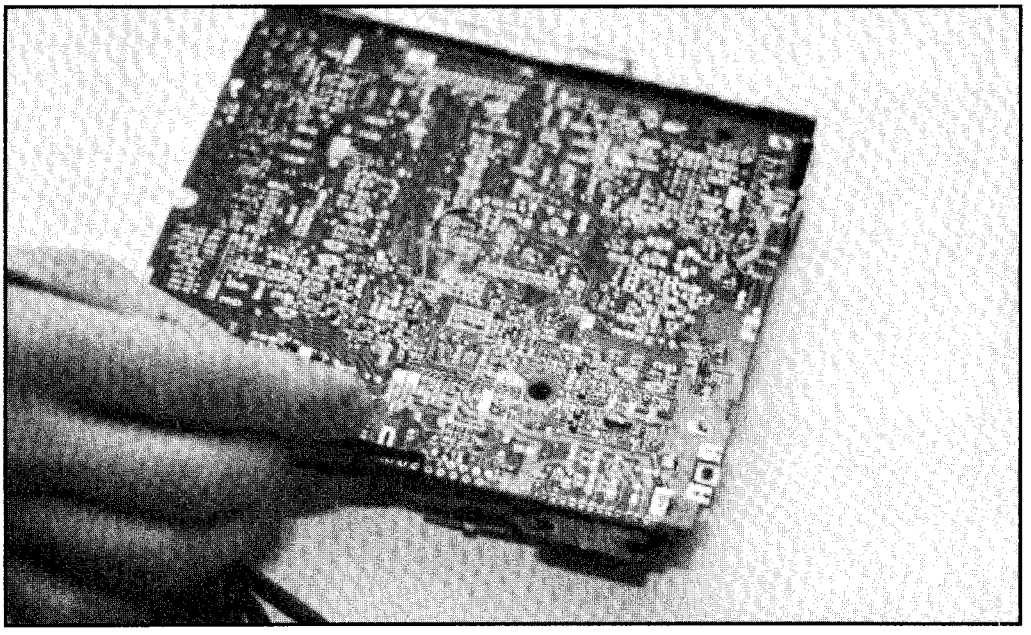

Figure 7: Checking for the audio signal before installing the new IC

from Consolidated Electronics for $12.00, a bargain compared to Alpine's price of $32.00.

Measure Voltage on Pads

We removed the power amplifier IC and applied power. Then we measured the voltages on the pads of the PC board and compared them to the schematic. The chart on the schematic makes checking voltages a breeze. We checked the solder pads that correspond to pins 6 and 12 of IC301 for audio signals (see Figure 7). Everything measured okay, so we installed the new IC and diodes. We applied power, hooked up a test speaker to the output, and hoped for the best.

At this point, we were not too concerned with blowing out the amplifier chip again. As long as the voltages on the board checked out, we expected everything to be fine. Sure enough, the unit played loud and clear. You cannot play music too loud before securing the amplifier IC back to the heat sink or it may overheat.

We re-installed the tape mechanism and verified operation of the tape. Then we completely reassembled the unit and let it run for a few hours to assure reliability.

Conclusion

After one quick look at the amplifier chip, it became obvious that somebody either shorted the speaker outputs or attached the battery to the wrong wires. This kind of repair usually entails only the replacement of the amplifier chip and possibly some transistors in the previous stage. A burnt out display bulb is another common ailment with car radios. — *Dana DeMeo*

Problem: Face does not display anything.

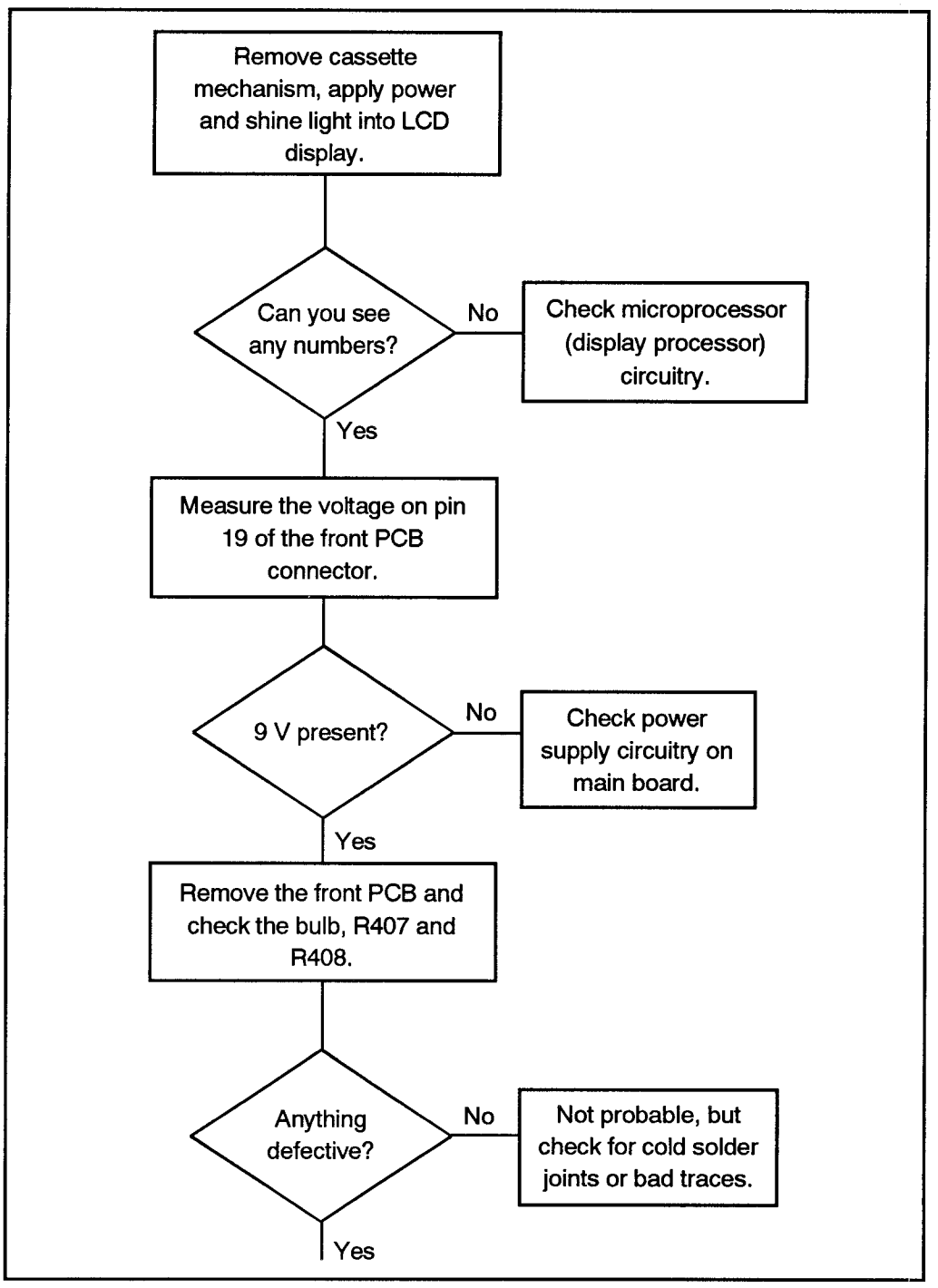

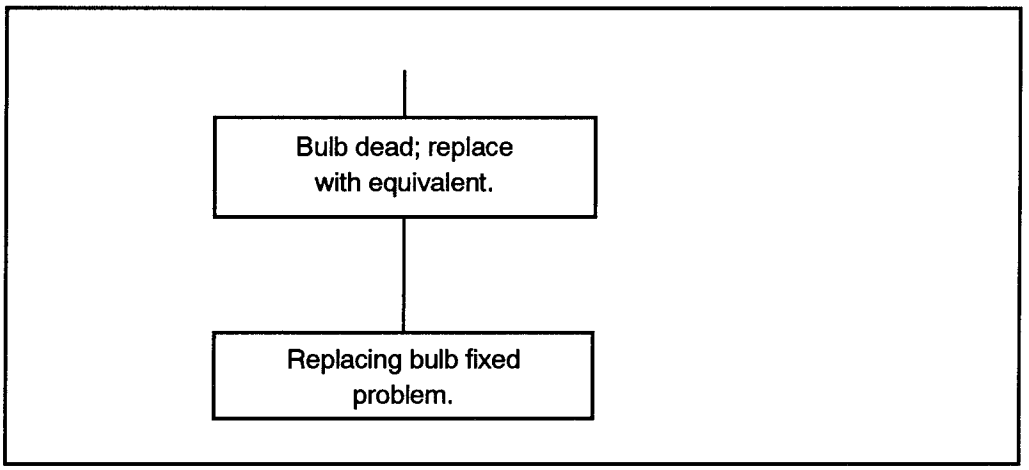
Bulb dead; replace with equivalent.
Replacing bulb fixed problem.

Problem: No audio output.

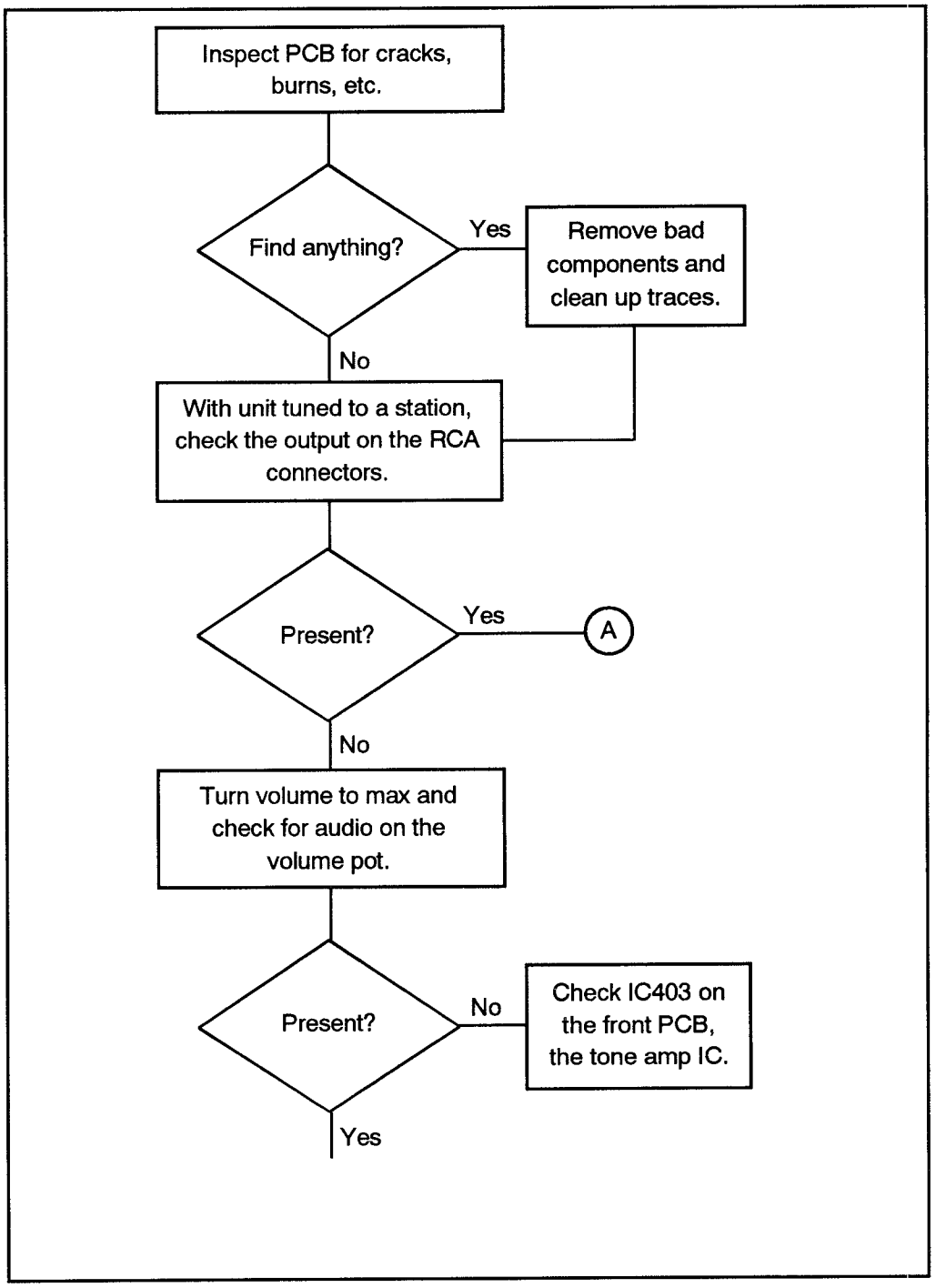

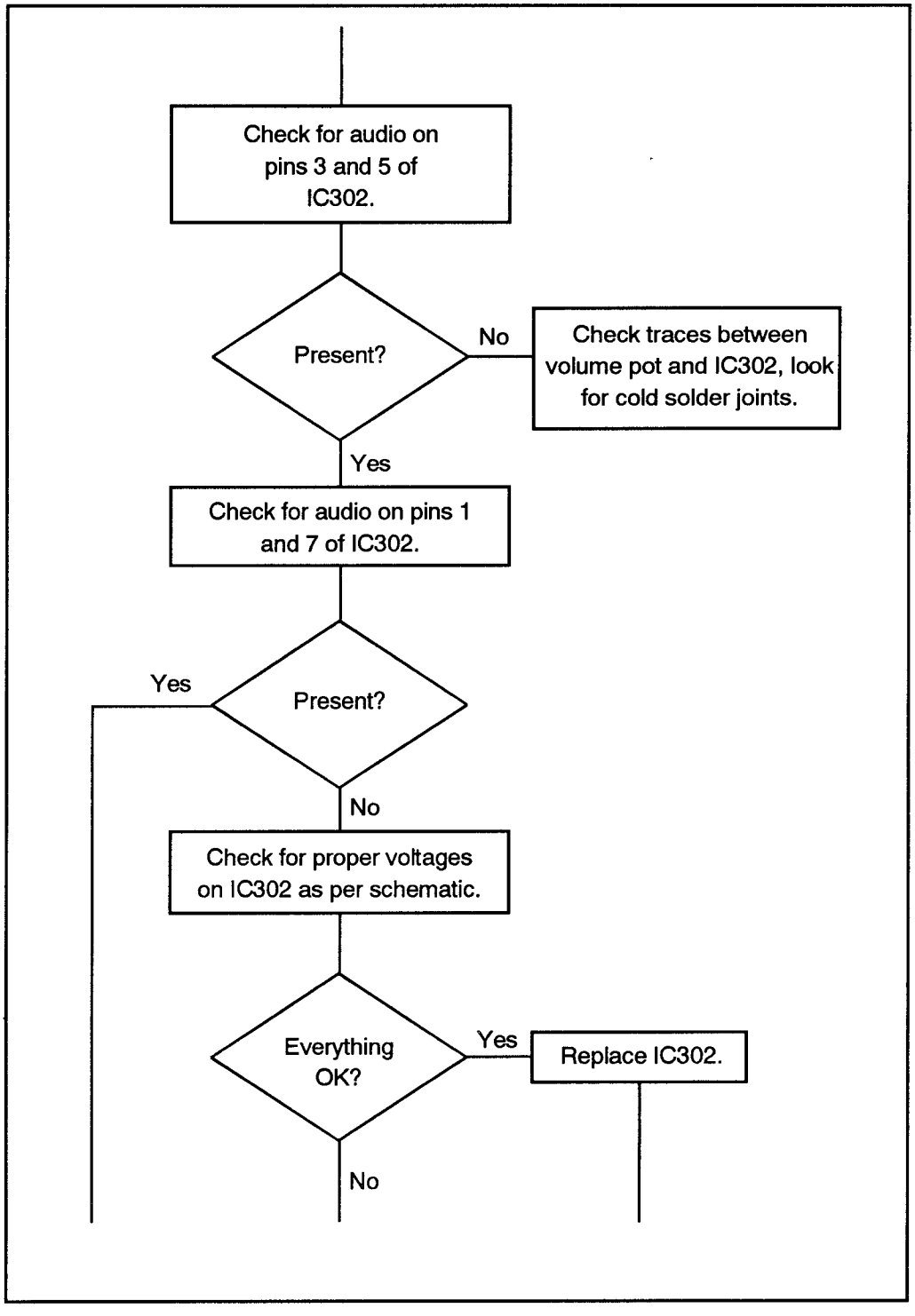
Check for audio on pins 3 and 5 of IC302.
Present?
No
Check traces between volume pot and IC302, look for cold solder joints.
Yes
Check for audio on pins 1 and 7 of IC302.
Present?
Yes
No
Check for proper voltages on IC302 as per schematic.
Everything OK?
Yes
Replace IC302.
No

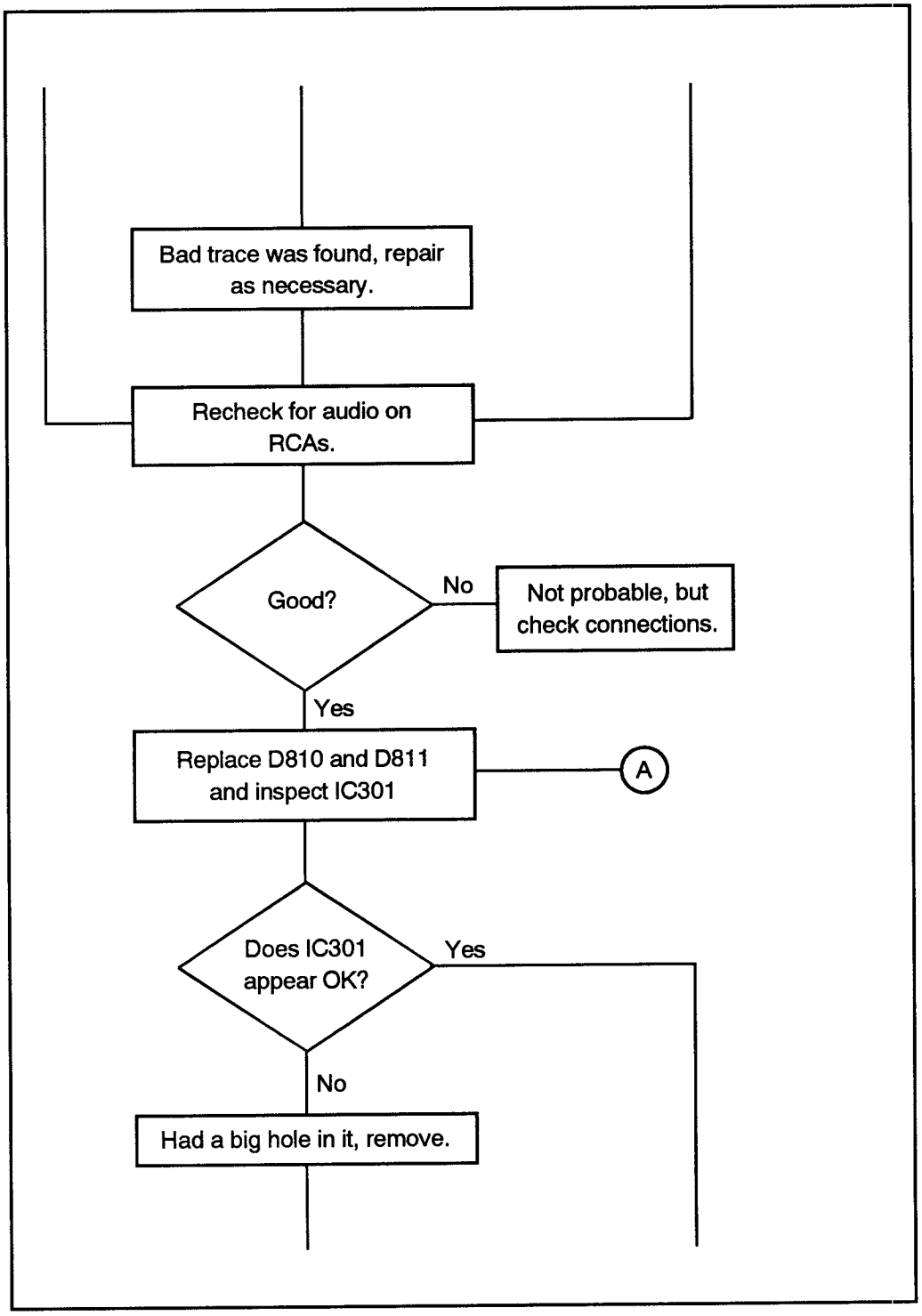
Bad trace was found, repair as necessary.
Recheck for audio on RCAs.
Good?
No
Not probable, but check connections.
Yes
Replace D810 and D811 and inspect IC301
A
Does IC301 appear OK?
Yes
No
Had a big hole in it, remove.

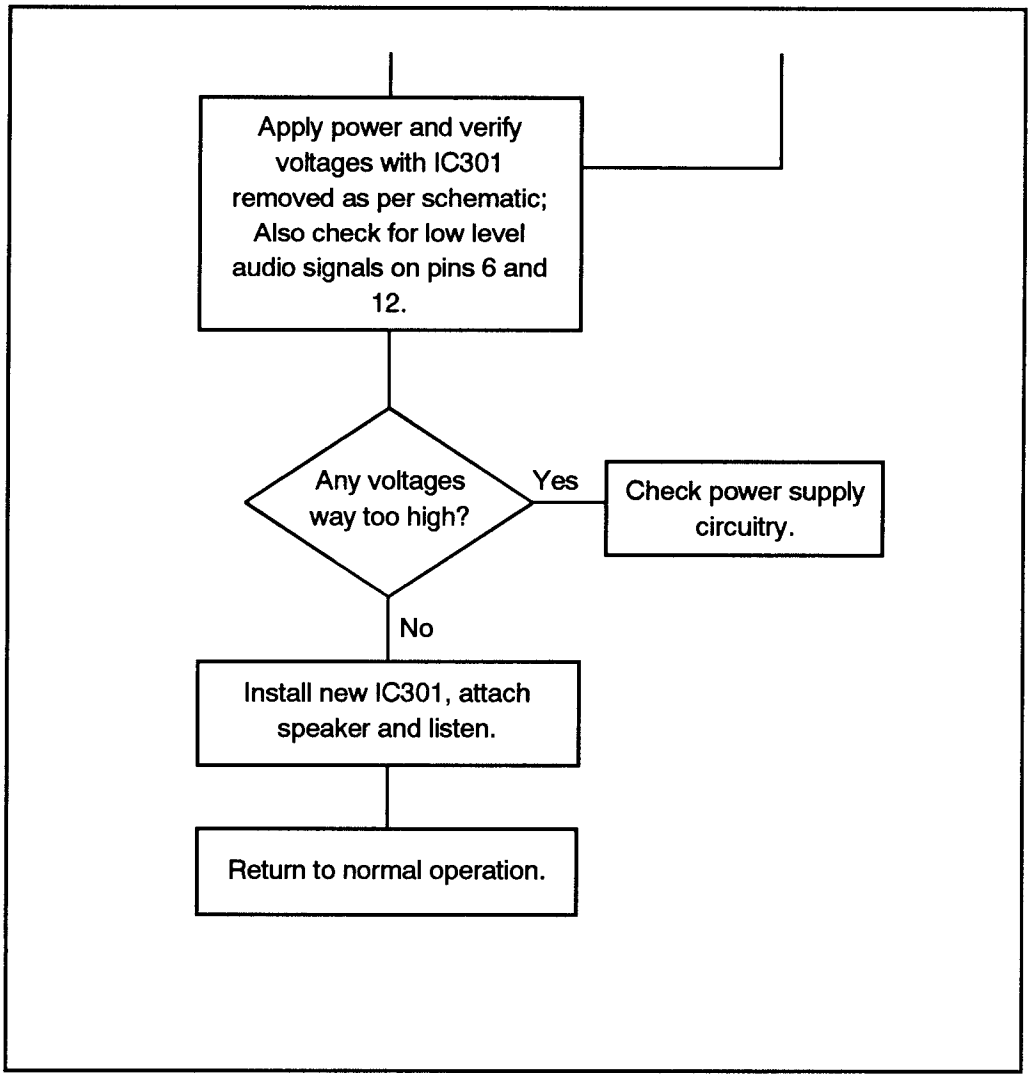
Apply power and verify voltages with IC301 removed as per schematic; Also check for low level audio signals on pins 6 and 12.
Any voltages way too high?
Yes
Check power supply circuitry.
No
Install new IC301, attach speaker and listen.
Return to normal operation.

8/VCS - AI	Alpine
8/VCS - AI - PCS	7293 Pull-out Car Stereo

8/VCS - AI
Alpine

8/VCS - AI - PCS
7283 Pull-Out Car Stereo

Repairing a Cassette Mechanism and Static-Filled Radio

This case study describes the repair of an Alpine 7283 pull-out car stereo. When the unit arrived at the shop, it was dirty and dusty, and the front panel showed obvious signs of abuse. The customer told us that at first, the cassette deck stopped playing. He attempted to remove a jammed tape manually, and felt certain that he damaged the mechanism. A few weeks later, the radio stopped tuning in the FM stations, and produced only static. The customer also complained that the volume switch had to be fooled with occasionally to prevent a choppy audio output.

Mechanical Damage

With this repair, the only thing we were sure of was mechanical damage, since a tape would not load into the unit. A worn out volume control is a common problem with radios, so our initial guess was that probably it would need replacement.

Repair Procedure

We applied power to the unit to verify the customer's complaints. The face of the unit lit; however, we noticed that some of the back lighting on the right side was not present. We could not insert a tape; something inside the cassette mechanism was damaged. We attached a DMM (not a speaker) to the outputs and measured the voltage. After finding no voltage present, we then attached an antenna to see if the radio would tune in a local station, but none of the stations would tune, only static was produced.

Remove Sleeve Connector

In order to further test the unit, the connector on the sleeve had to be removed. We removed this connector and plugged it directly into the back of the unit. Note that in normal operation, power can be applied only via the sleeve connector. If no sleeve is supplied with the radio, Alpine sells the appropriate connector. In a worst case scenario, examination of the connector from the inside of the unit

usually indicates which wires are which by their color and where they connect internally.

We removed the necessary screws and lifted away the top and bottom covers (see Figure 1). With the unit face-up, we inserted a tape and looked to see where the obstruction was. We chose to begin this repair with the cassette mechanism, since the mechanical tape-loading problem was obvious and seemed as though it would be easy to solve.

One quick attempt showed exactly why the tapes were jamming: The mechanism that pulls the tape onto the drive wheels was bent down, obstructing the cassette's entrance. To be specific, a metal guide that connects the loading cage to the ejection button was bent severely.

To fix this, we removed a plastic hold-down and spring on the ejection arm,

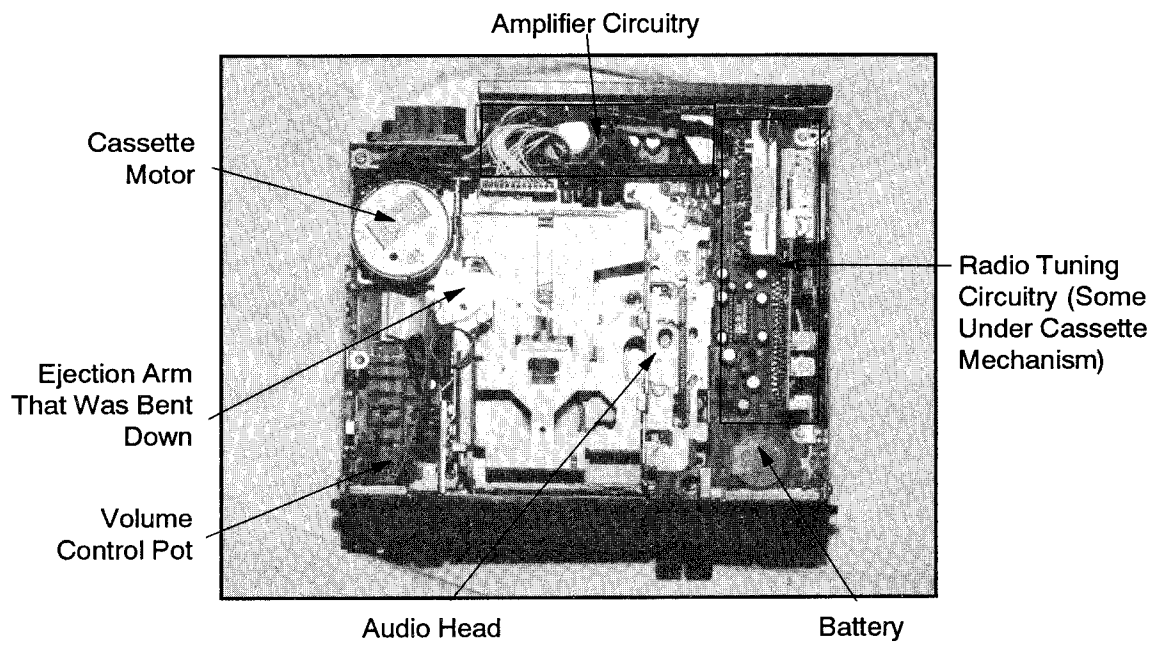

Figure 1: Top view of the car stereo with the cover removed

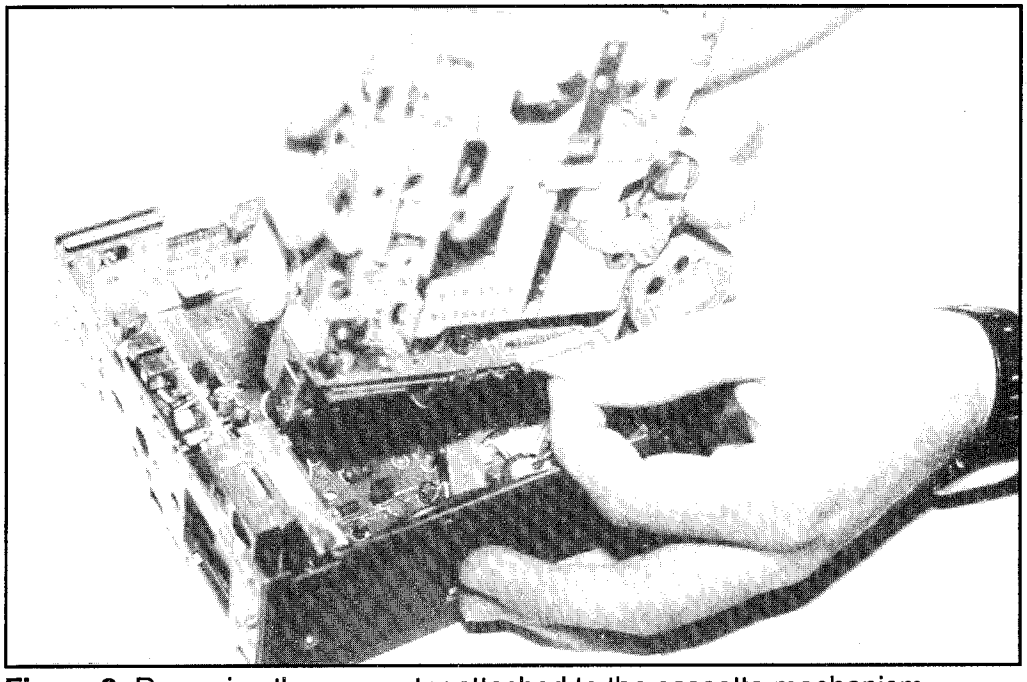

Figure 2: Removing the connector attached to the cassette mechanism

removed the arm from the mechanism, and bent it back to its proper shape. Then we reassembled the unit and tested it by inserting a tape.

Tape Doesn't Move

The tape inserted smoothly, and the mechanism loaded it onto the drive reels. Though we heard the motor begin to spin, the tape was not moving. Both fast forward and rewind failed to work as well. The output from the speaker changed from static (radio output) to silence when the 7283 switched into cassette mode.

Broken Belt

Since we could hear the motor spinning, we assumed that the main drive belt had fallen off or was broken, a common problem with cassette decks. We now disconnected power and ejected the tape. We removed the screws on the side of the unit, pulled off all buttons and snapped off the face. We removed four more screws and carefully lifted out the cassette mechanism. To completely separate the mechanism from the rest of the unit, we also detached a ribbon connector (see Figure 2). At this point, we inverted the tape mechanism and carefully bent up the metal shield covering the PC board. We removed all the screws holding down the plate that covers the belts, and removed the plate. We inspected the belt.

As expected, the belt had fallen off the pulleys (see Figure 3). A quick tug showed

The Alpine 7283 car stereo as it arrived in the shop.

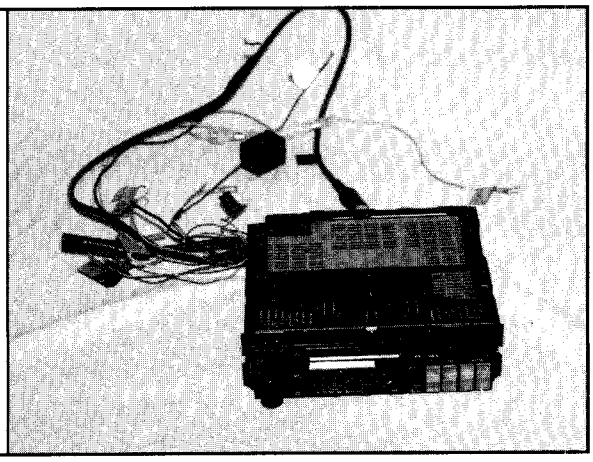

Removing the connector from the sleeve.

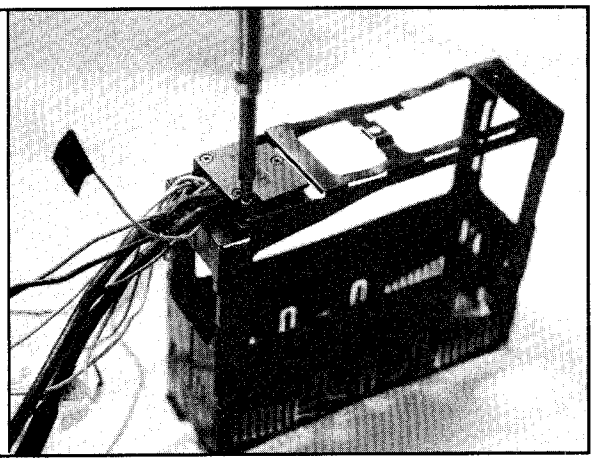

Removing the spring from the tape ejection arm; this allows for removal of the arm to bend it back to shape.

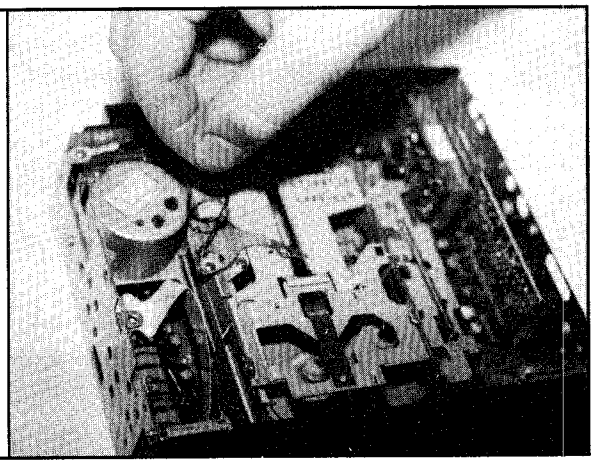

Removing the face from the unit.	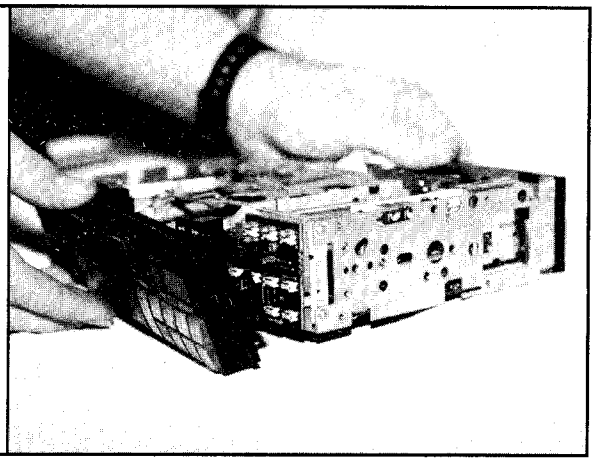
Removing a screw that secures the cassette mechanism to the base.	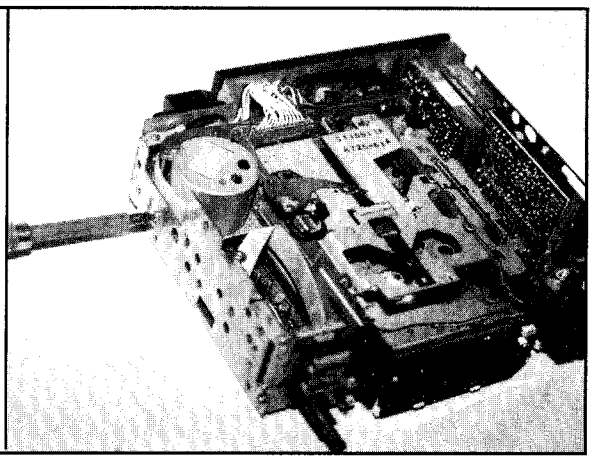
Removing the cassette mechanism from the unit.	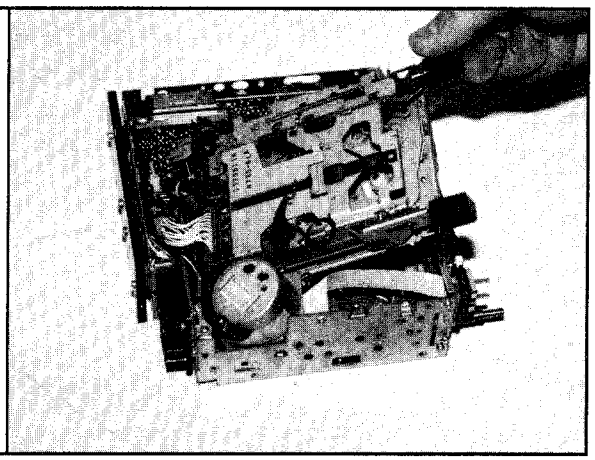

Replacing the defective belt.	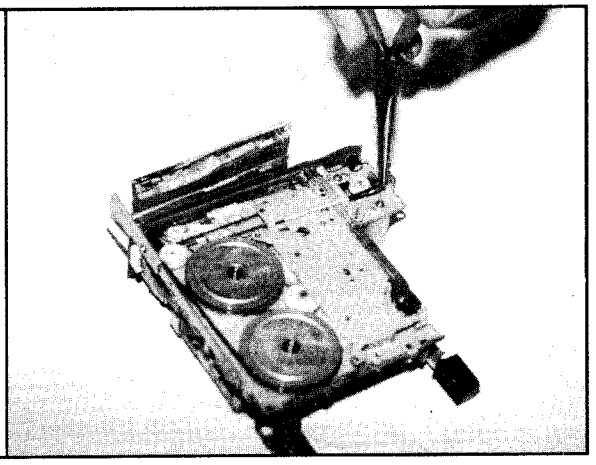
Spraying the board with a Freon substitute to try to get the radio playing.	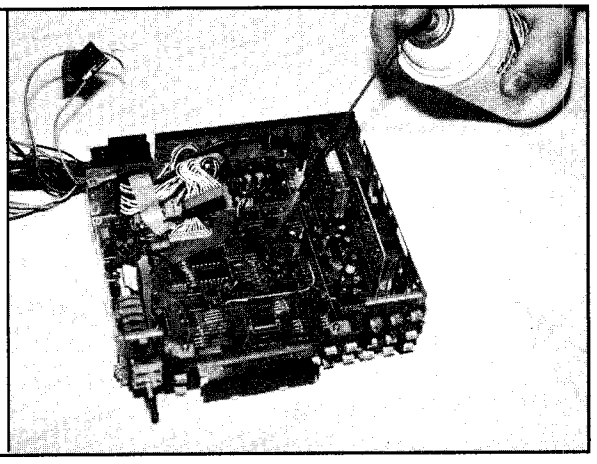
Pushing the PC board with a ball point pen, trying to locate a bad solder connection.	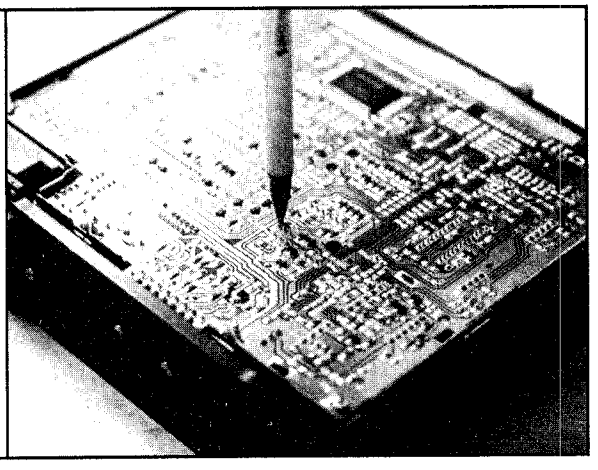

Removing the front PC board.	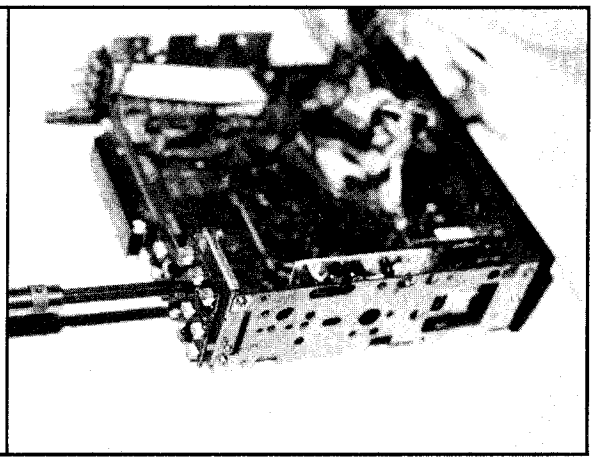
Desoldering a defective bulb on the front PC board.	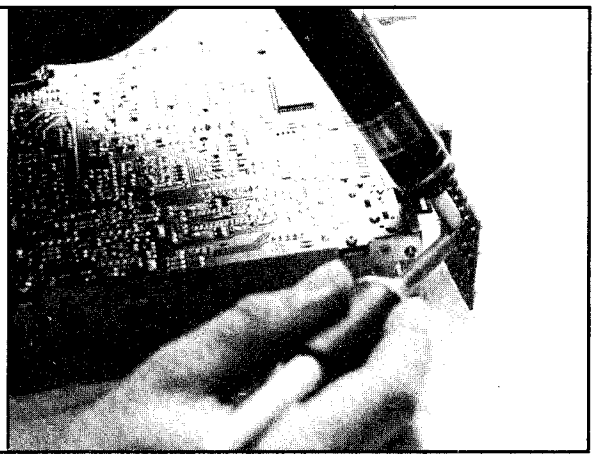
The major equipment used to do the repair.	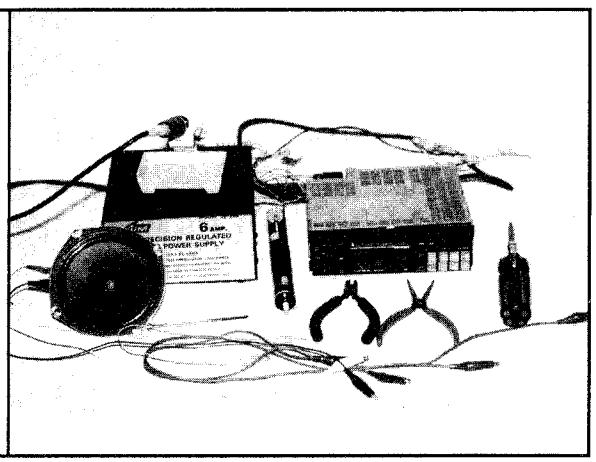

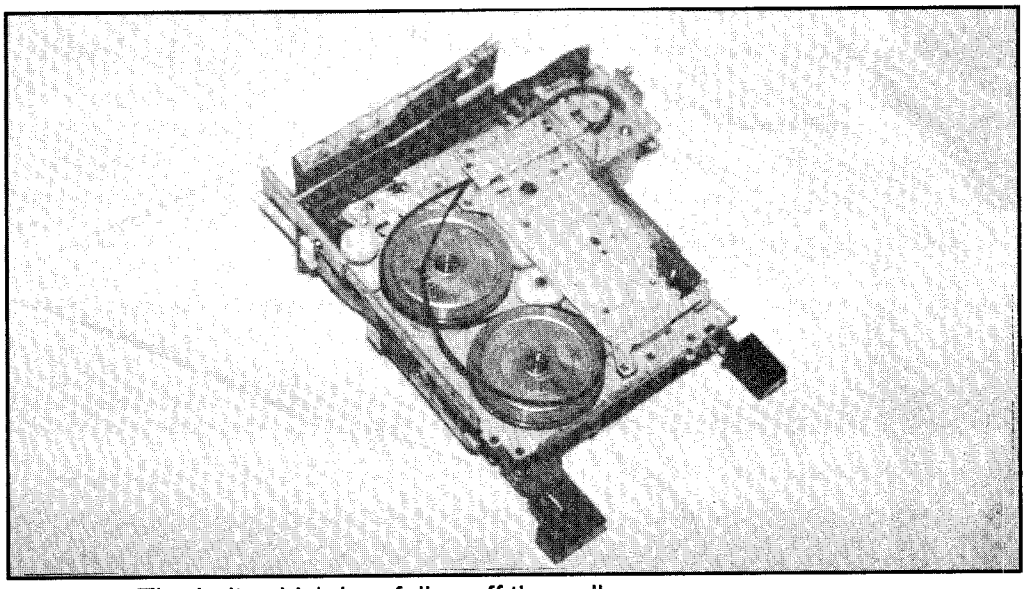

Figure 3: The belt, which has fallen off the pulleys

that the belt was completely dried and stretched out. We removed one screw and the plate covering the motor spindle. This gave us access to install a new belt of equivalent size. Before installing the belt, we also removed each capstan (by pulling up on the two large flywheels) and cleaned all the dirt with a solvent (see Figure 4). Then we reinstalled the plates, reconnected the tape mechanism, and tested the 7283 with a tape. Sure enough, the tape played fine; the audio was clean and undistorted. Careful listening indicated that the tape was playing at the proper speed.

Thermal Problem

Since the tape player was obviously fixed, we decided to disconnect it and put it aside. We did this because we figured that we probably would need access to the radio circuitry located underneath. We tuned the FM radio to a local radio station and listened to the output. To our surprise, the radio was working. However, after a few more seconds, it faded back to static, taking us even more by surprise. The first thought that came into mind was a thermal problem; a semiconductor in the tuning circuit that stops working when it warms up. We sprayed a Freon substitute (Kwik Freeze is good) all over the board, looking for a spot that might restore operation.

When the Freon substitute touched an area near the center of the board (right where the tape mechanism normally resides) the radio began playing again. After about five seconds, the static returned. After another long burst of cold spray the

radio started working again, but this time it didn't quit so soon. While waiting for the radio to stop playing, we placed the can of Freon back on the table. Right at that moment, the radio quit. Seeming too coincidental, we hit the table a few times and the radio began working again.

Poking Around

We inverted the unit and inspected the board near the center. Gently pushing with a ball point pen in various spots near the center of the board, we listened to the output. We were looking for the sensitive spot that was causing the intermittent problem. We now suspected a bad solder joint, loosened from vibration, somewhere in the center of the board.

Hairline Crack

The radio was very sensitive to prying; the slightest push would make it play and then stop if pushed a little harder. We eventually found a hairline crack on a small solder pad. A quick dab of solder immediately solved the problem. Now the unit could be banged all over the place and still receive all radio stations.

Volume Knob

Now that the radio was fixed, it was time to tackle the next problem, the volume knob. We vigorously shook the volume pot listening for an effect on the output. We watched the traces on the bottom of the board for bad connections.

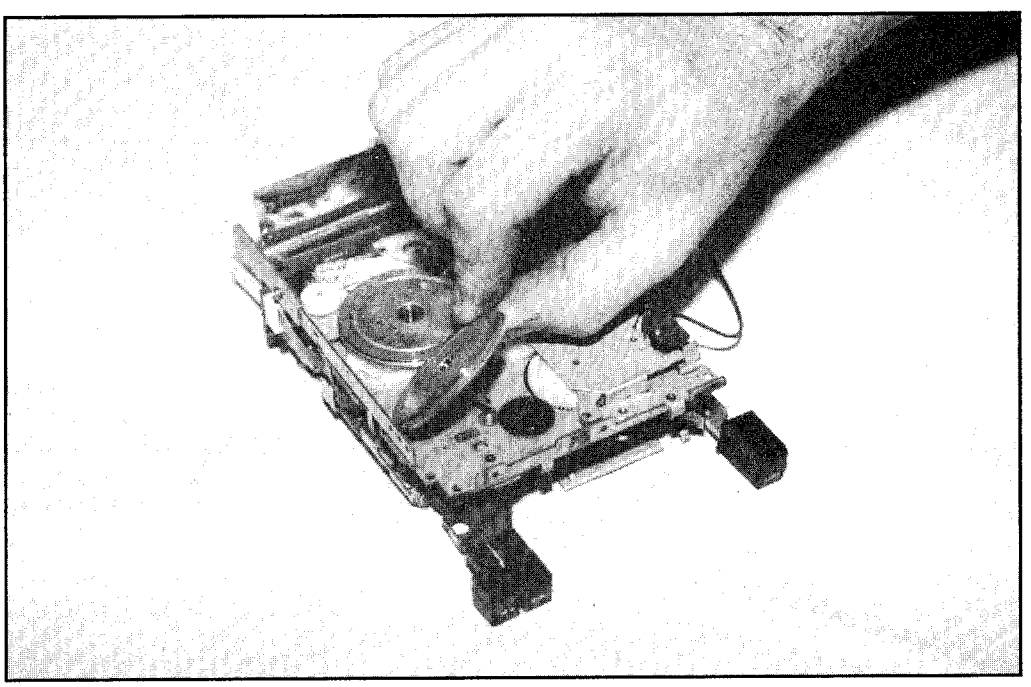

Figure 4: Removing the capstan to clean it before replacing the belt

As described by the customer, the output became choppy. However, we noticed a cold solder joint on two of the traces from underneath the board. A quick dab of solder fixed this problem once and for all.

Defective Bulbs

Finally, we wanted to fix two lights that were not lit on the front panel. First, two screws had to be removed, and a metal tab near the eject button bent back (see Figure 6). This let us lift the front PC board away from the chassis. You should always be careful when dealing with ribbon connectors, in this case a white one near the volume pot. Don't pull too hard. We unsoldered the two defective bulbs and tested them with an external power supply. Both bulbs were dead.

Replace Bulbs

We replaced the dead bulbs with two new ones, resecured the PC board to the chassis, and tested. The new bulbs worked fine. It was now time to reassemble the entire unit. We made sure not to forget to bend back the tab securing the front board. We tested each speaker output to ascertain that the amplifier worked completely. Before replacing the top and bottom covers, we cleaned the entire unit with compressed air, and cleaned and demagnetize the head in the tape player (see Figure 6).

Conclusion

This repair is a good example of common car cassette radio problems, along with their solutions. Pull-out radios, especially, take abuse, commonly inflicted in the

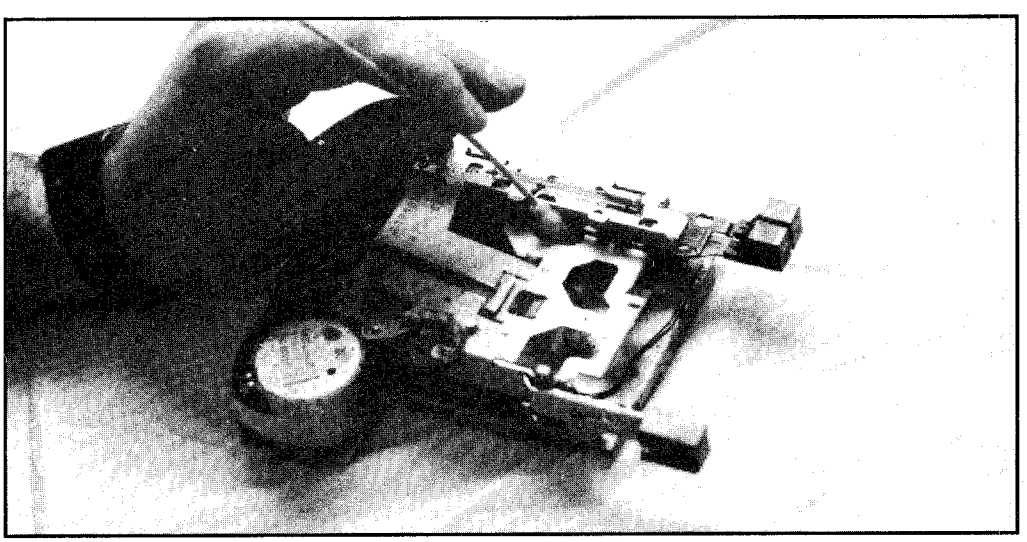

Figure 5: Cleaning the audio head

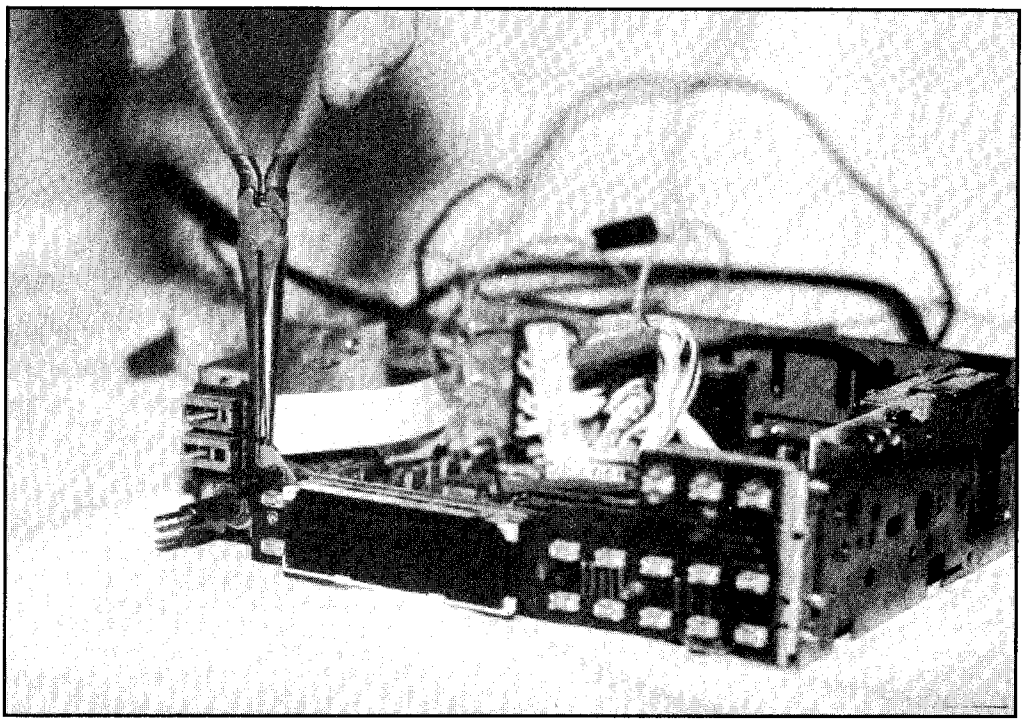

Figure 6: Bending the tab to remove the front PC board

form of vibration. This is what makes the problem with the tuner so common. Vibration shakes apart the weaker solder joints, causing problems. Also, the belts always stretch or break after a few years in a car stereo. The volume knob is another common problem among car radios. Subject to much abuse by the driver, the knob tends to become intermittent after a few years. The common solution is replacement; however, a cold solder joint was the culprit in this repair.
— *Dana DeMeo*

Problem: Fixing a broken cassette and car stereo static.

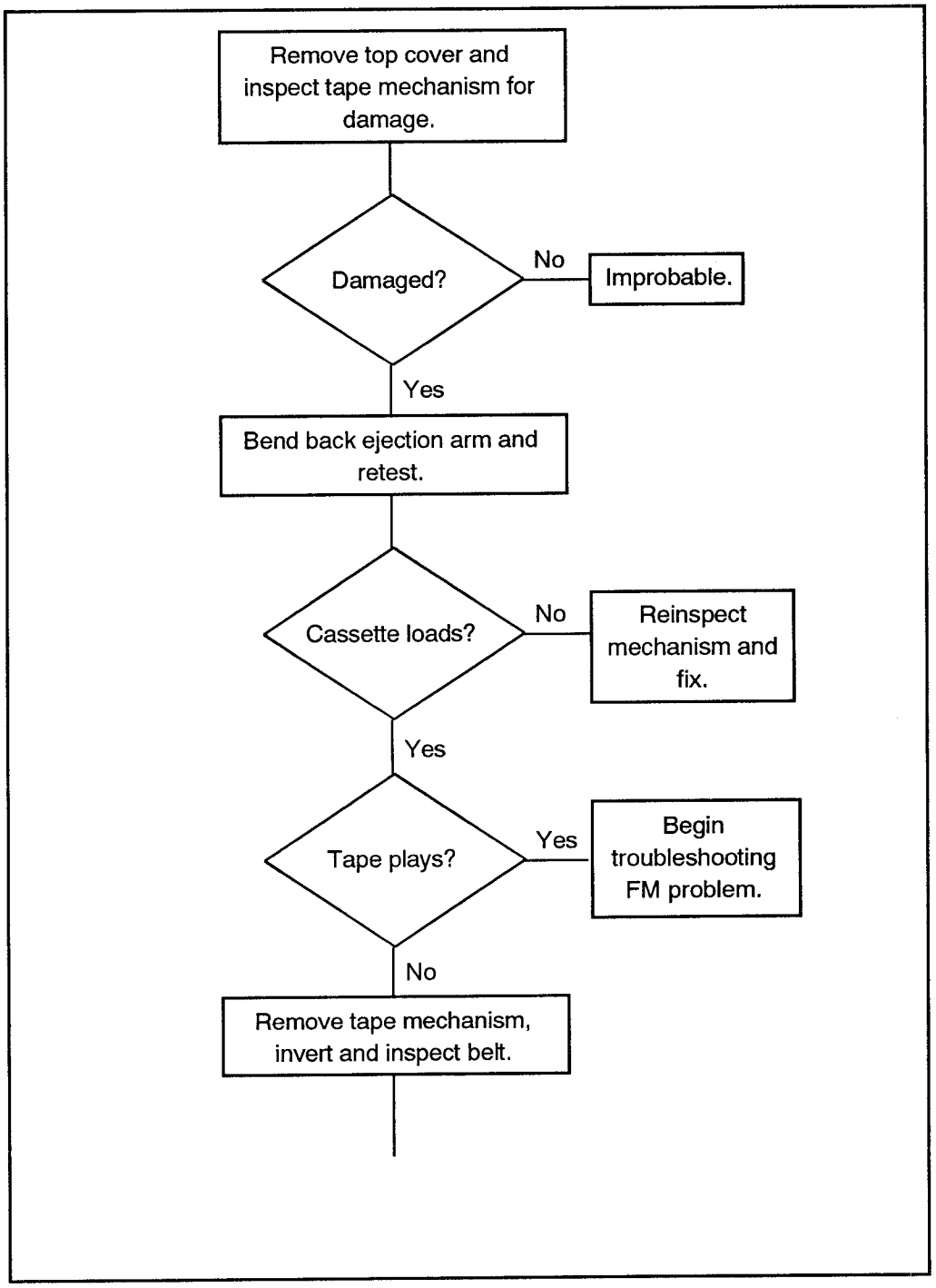

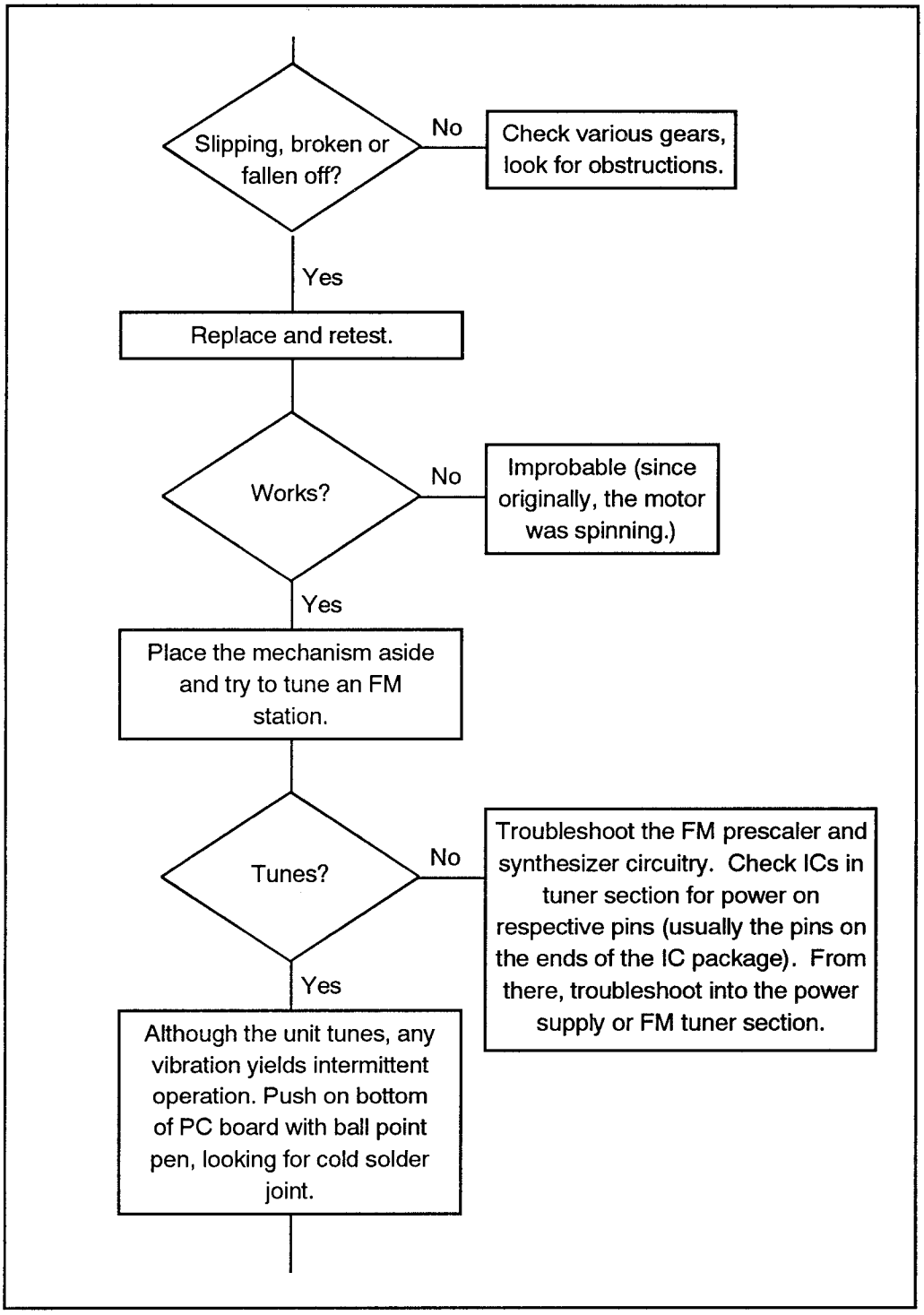
Slipping, broken or fallen off?
No
Check various gears, look for obstructions.
Yes
Replace and retest.
Works?
No
Improbable (since originally, the motor was spinning.)
Yes
Place the mechanism aside and try to tune an FM station.
Tunes?
No
Troubleshoot the FM prescaler and synthesizer circuitry. Check ICs in tuner section for power on respective pins (usually the pins on the ends of the IC package). From there, troubleshoot into the power supply or FM tuner section.
Yes
Although the unit tunes, any vibration yields intermittent operation. Push on bottom of PC board with ball point pen, looking for cold solder joint.

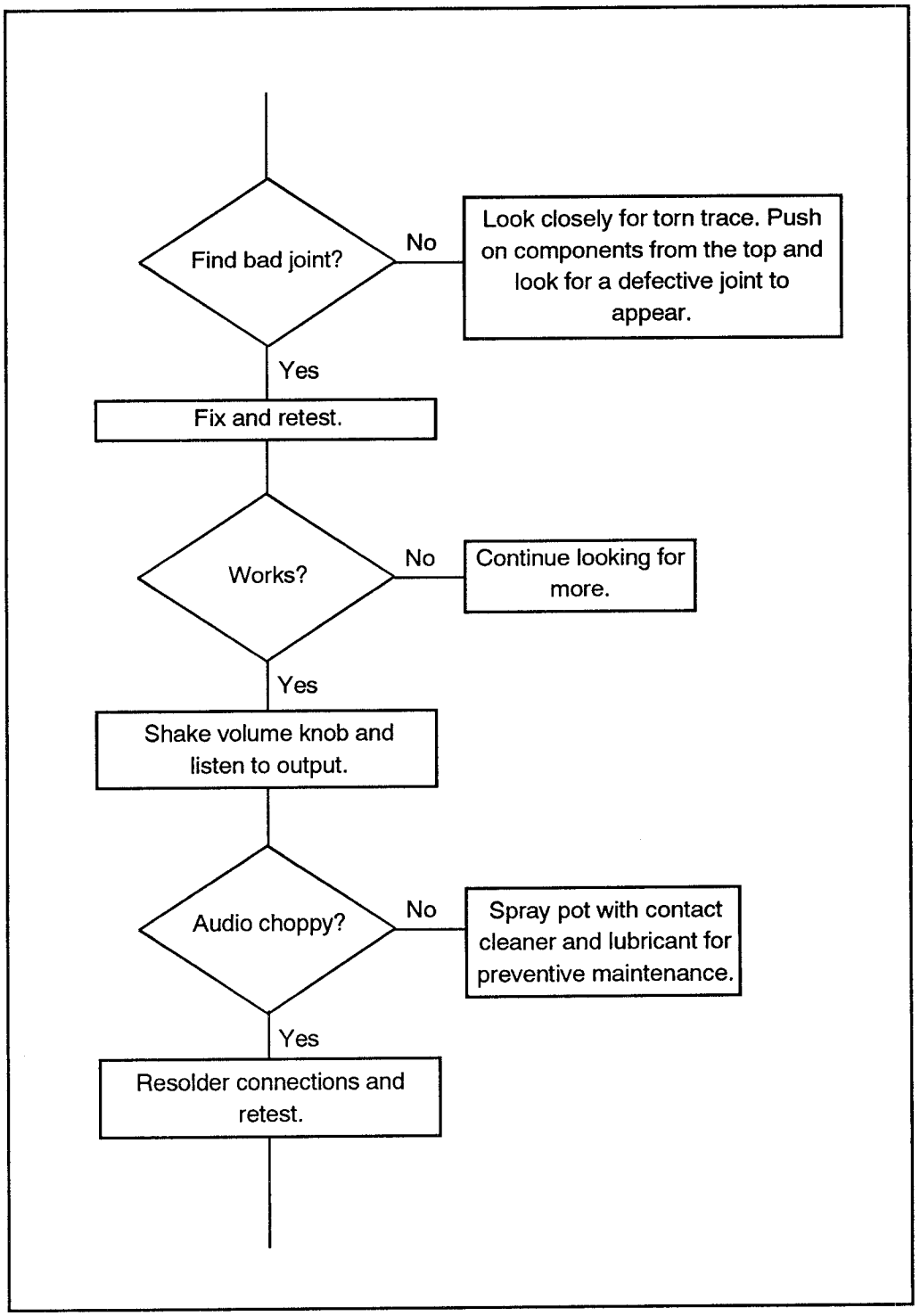
Find bad joint?
No
Look closely for torn trace. Push on components from the top and look for a defective joint to appear.
Yes
Fix and retest.
Works?
No
Continue looking for more.
Yes
Shake volume knob and listen to output.
Audio choppy?
No
Spray pot with contact cleaner and lubricant for preventive maintenance.
Yes
Resolder connections and retest.

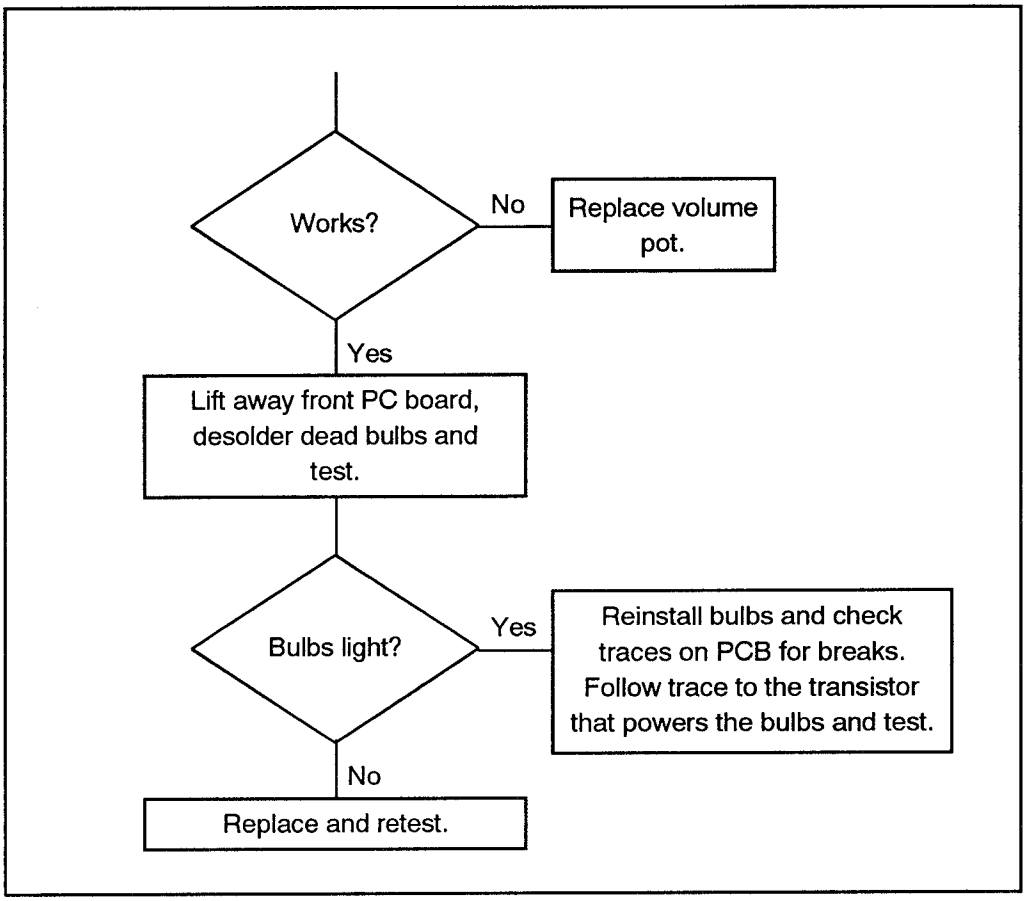
Works?
No
Replace volume pot.
Yes
Lift away front PC board, desolder dead bulbs and test.
Bulbs light?
Yes
Reinstall bulbs and check traces on PCB for breaks. Follow trace to the transistor that powers the bulbs and test.
No
Replace and retest.

8/VCS - K
Kenwood

8/VCS - K - CA
KAC-8020 Car Amplifier

Correcting Distortion in a Kenwood Car Amplifier

The case study presented here is a good example of what happens when a piece of electronic equipment suffers abuse. The Kenwood Stereo Main Amplifier Model KAC-8020 is a unit normally installed in the trunk or under the seat as part of a car's stereo system. When this unit was brought in for repair it looked beat up. The bottom plate was missing, the input connector had come loose from its mount, and there were numerous exterior scratches and nicks.

Problem Areas

The customer told us that he was experiencing several problems with the amplifier. First of all, both channels were exhibiting distortion at low volumes. Next, the subwoofer crossover function, when activated, was causing a loud popping at the output. Finally, the signal cut on and off completely when the unit was shaken.

Verifying the Customer's Problems

To verify the customer's complaints, we attached speakers and an audio input to the Kenwood amplifier. The input we used was from a CD player, though any signal is acceptable. Then we applied power and observed the indicated problems. We adjusted the sensitivity, shook the unit, and activated the subwoofer crossover, by moving the slide switch at the rear of the unit (see Figure 1). The amplifier did turn on and all the problems mentioned by the customer were evident. Additionally, the amp appeared to draw spikes of current (up to 5 A) at random, with no signal applied. With all of the problems verified, it was time to disassemble the unit.

Disassembly and Inspection

After removing power and all other connections, we disassembled the amplifier.

A disassemby diagram is shown in Figure 2. Since the unit we had was missing the bottom cover, we did not need to perform this part of the disassembly.

Inspect Components

It was now time to inspect the components of the unit for burns, cracks, and broken or loose wires. No defective components were evident, but there was a loose wire leaving the pre-amplifier board. We suspected that this was the source of the cutting out problem. We secured the wire by resoldering it to the unit.

Major Sections

Before starting the troubleshooting procedure, it is a good idea to try to figure out where the major sections of the unit lie. As shown in the photo of Figure 3, the amplifier is divided into two sections: the power supply board and the board that contains the power amp, protection circuitry, and subwoofer crossover circuitry. The power supply board holds, among other things, the switching transistors, the transformer, and the power supply capacitors. The other board holds the power amplifier transistors and their driver ICs.

More Observations

Further observation helped us to locate the left and right channel amplifers, protection and subwoofer circuitry, the power wires, *rails* for the amp (rails of an amplifier refer to the transistor input voltages from which the audio signal is produced; rails are usually the thicker wires in a unit), and protection feedback wires. Looking at the PC board from the bottom (see Figure 4) also gives some hints as to where components are located. Using symmetry and observation as well as noting the markings on the board, you can determine, in this case, the

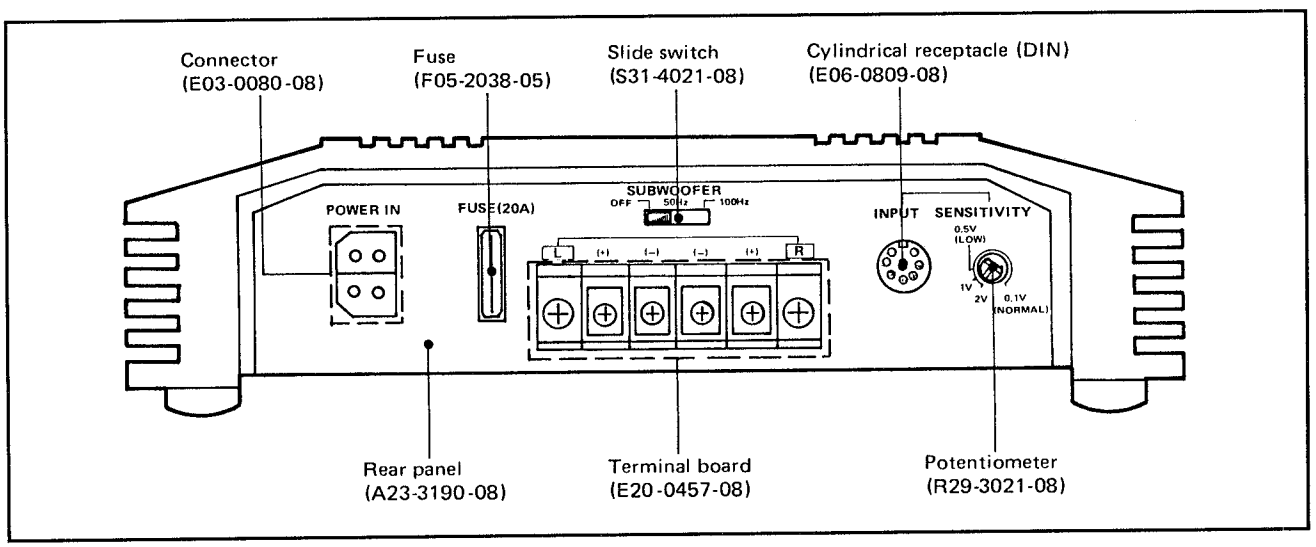

Figure 1: The side panel of the Kenwood Amplifier, showing the subwoofer crosssover switch.

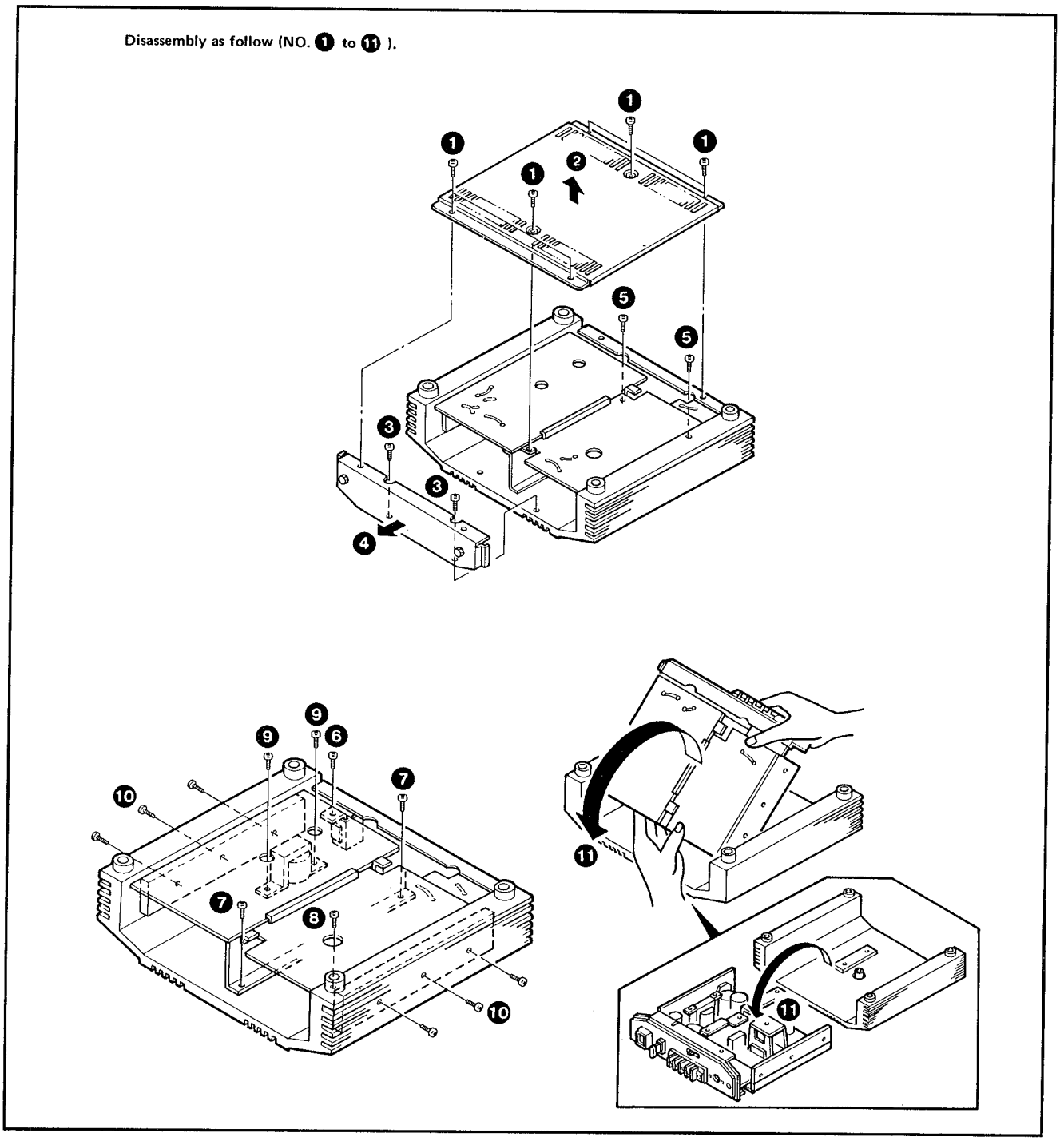

Figure 2: The disassembly diagram for the Kenwood amplifer.

location of the preamplifier board, the protection circuitry section, and the subwoofer crossover section.

Inspect for Obvious Faults

After developing a good understanding of the unit, it is time to inspect for obvious faults, such as torn traces, shorted leads, or burns. For this particular unit, which has a missing cover, there is a good chance these problems will exist. However, a thorough inspection of the amplifier revealed no problems of this kind, surprisingly. The board appeared to be in good condition, and no burn marks were evident.

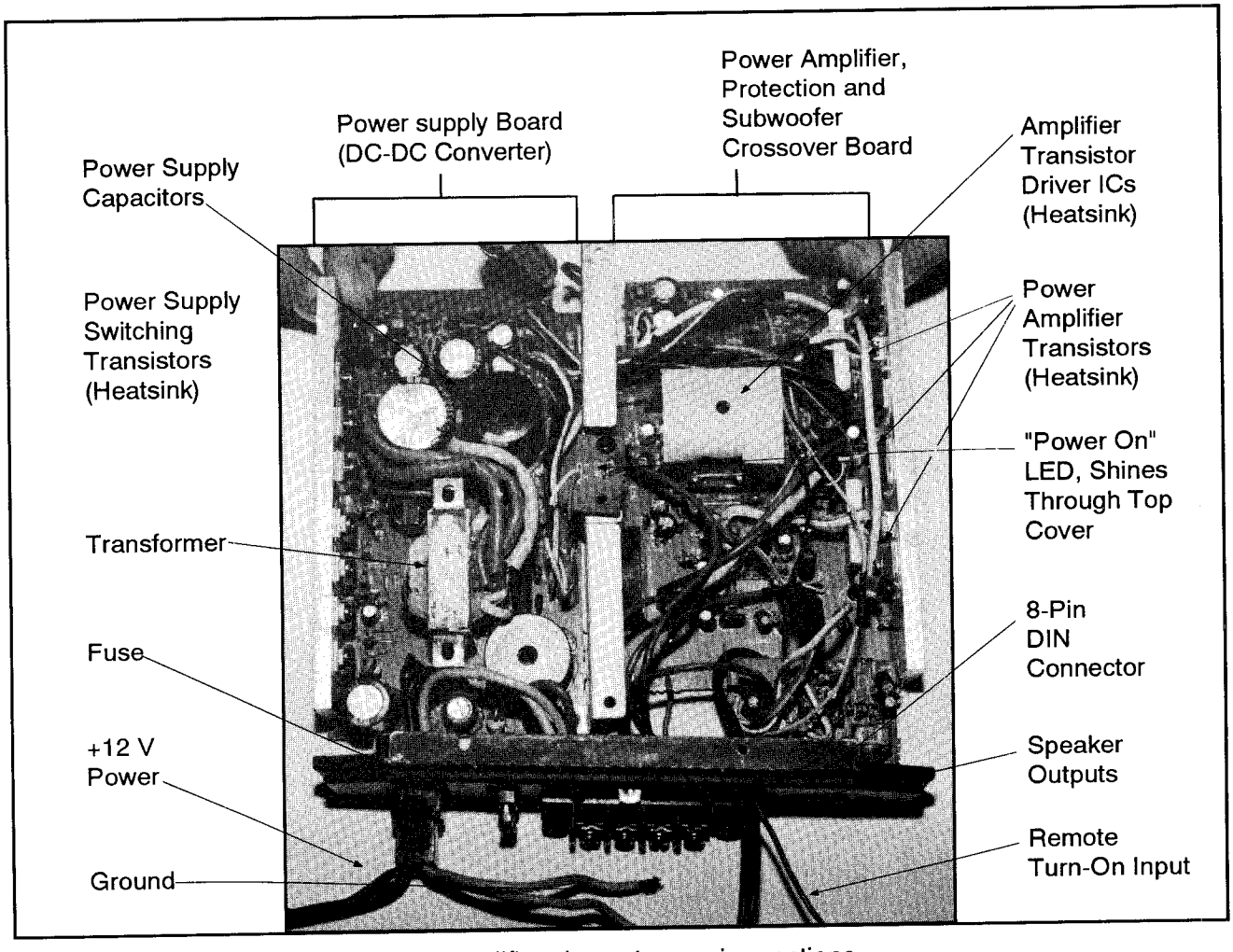

Figure 3: A visual inspection of the amplifier shows two major sections.

Initial Troubleshooting Procedures

We again applied power to the unit, making sure that nothing was internally shorted. We used our meter to check for equal and opposite voltages on rails and power connections to the pre-amplifier board. We made sure that the subwoofer crossover switch was off, since it caused the unit to act erratically.

Check Power Supply

Since both channels indicated the same trouble (distortion at low volumes), the power supply is a likely suspect for failure. Checking voltages on wires leaving

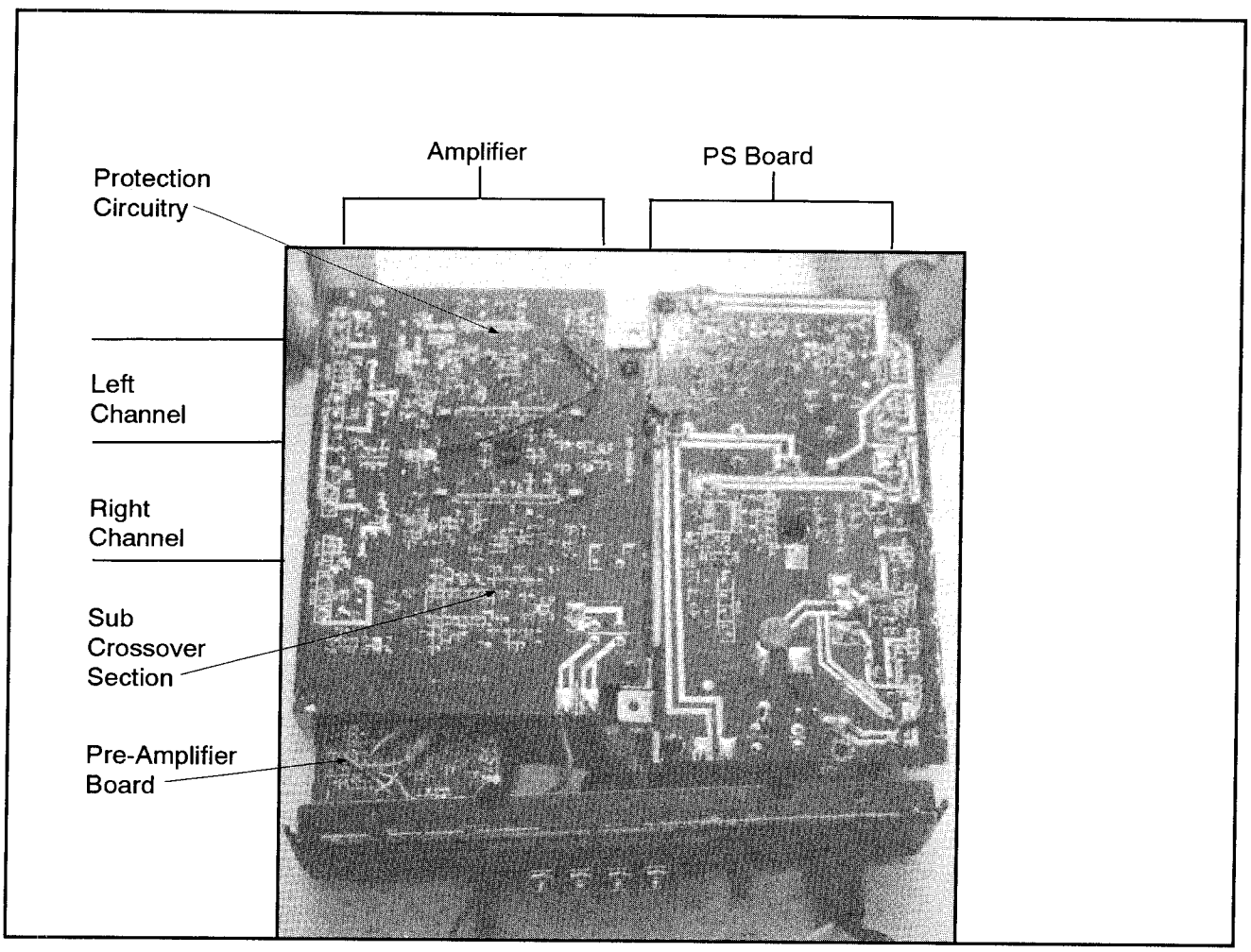

Figure 4: A revealing look at the foil side of the PC board.

The Kenwood KAC-8020 amplifier as it arrived in the shop. Notice the signs of abuse: the bottom plate is missing, which caused one of the problems that needed repair. Also notice that there are obvious modifications done by a third party: RCA input jacks were added to the amplifier to substitute for the 8-pin DIN connector.

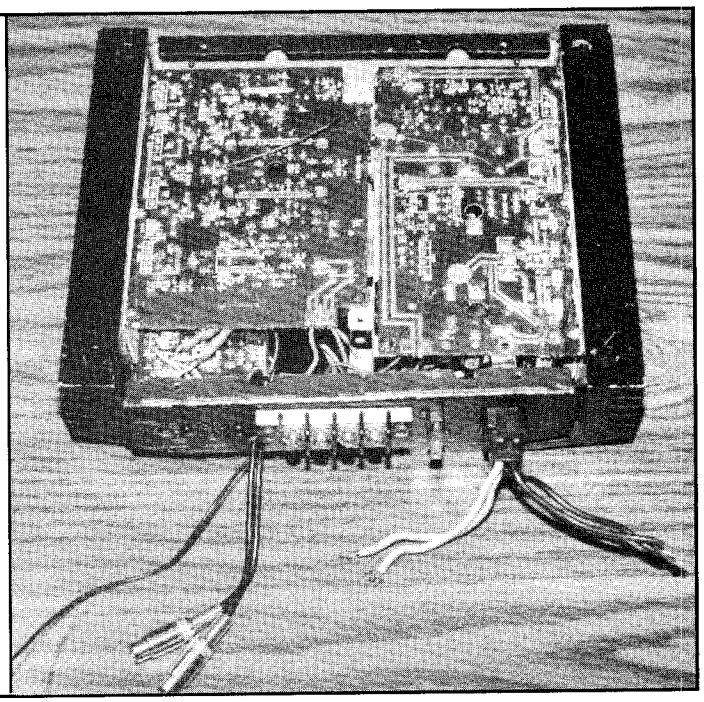

To remove the guts of the amplifier, you have to remove six screws that attach the transistor heat sinks to the sides of the case and the six that attach the board to the top of the case. Notice another sign of abuse: the case is scratched and scuffed.

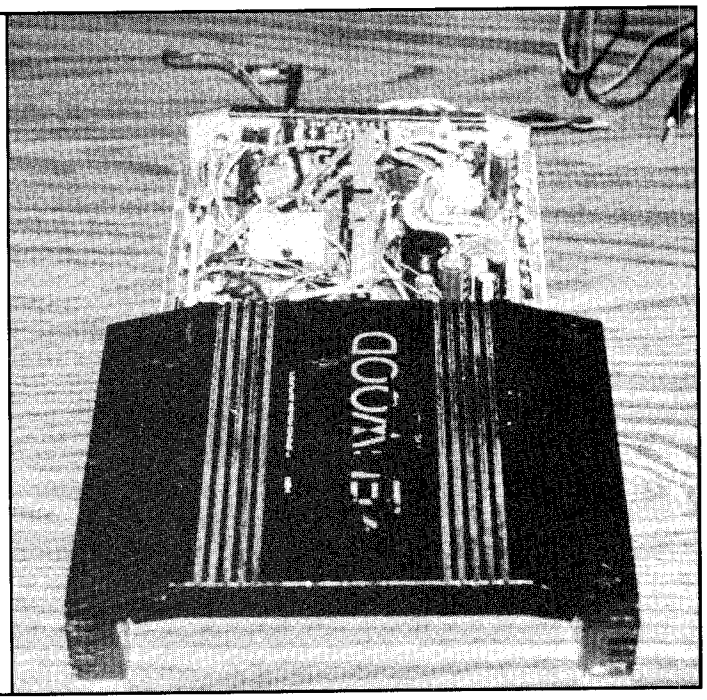

With the case removed, there is more evidence that someone has worked on this unit before. Some of the wires are covered by heat shrink tubing, while others have been spliced and taped.

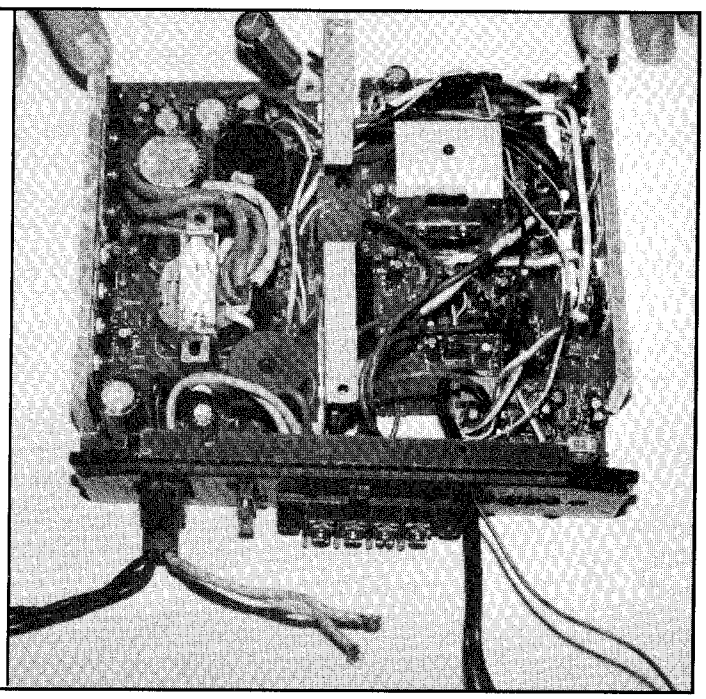

The major equipment need to perform the repair consists of an oscilloscope, DMM, 12 VDC, 6 A power supply, soldering iron and desoldering tool (not shown), and a test speaker. A signal generator also can be used, but is not absolutely necessary.

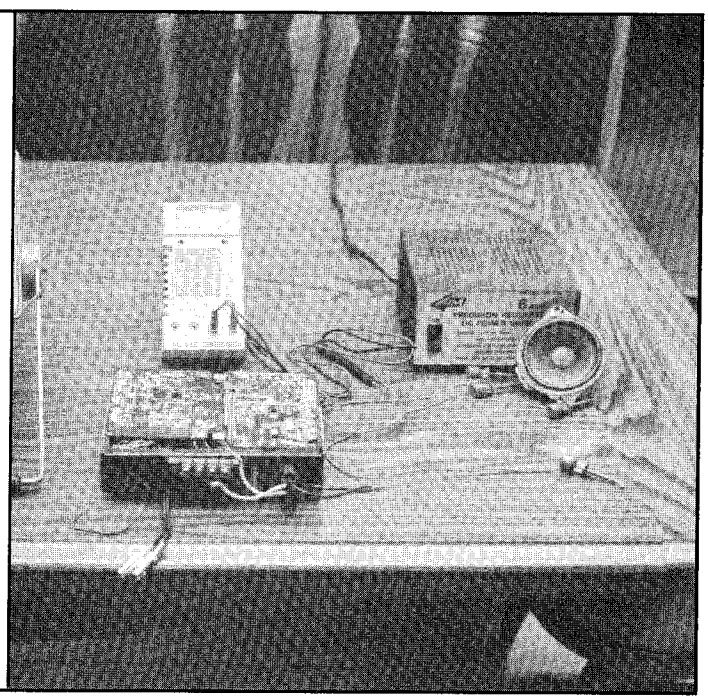

the power supply board often steers you in the proper direction. Voltages on the rails feeding the power amplifier driver IC (μPC1270) read ±35 V, the ground within the power amplifier board was at 1 V potential with respect to the chassis. The white wire of the unit had -32 V, the red wire had 16.5 V, and the black wire had 0 V. The two brown wires of the unit appeared to have the output audio signal on them. The pre-amplifier rails were ±5 V. After noting these results, we removed the power. Always discharge the large capacitors on the power supply board to ensure no stray voltages remain in the unit after shutdown.

One Rail Twice The Other

The unsymmetrical voltage between the red and white wires led us to believe that the power supply was defective; rails are *usually* equal and opposite. In this case, one rail was twice the voltage of the other. We decided to remove each power supply transistor and test them with an ohmmeter. We also double checked the board for burnt diodes or resistors. When all transistors tested operational, we were really surprised. You take a chance when performing these tests. In some instances, a defective transistor is located and the problem is fixed quickly and easily. In other cases, time is wasted. In this case, we sacrificed the time because we felt confident that the power supply was defective in some way.

Troubleshooting With the Service Manual

Since the power supply appeared to be operational, we reached a dead end about what to do. We needed further information about the amplifier design and the proper voltages at different locations. At this point, we purchased the service manual. We ordered it from an authorized Kenwood dealer. It cost $17.50 (including shipping) and took 10 days to arrive.

Choose Test Points Wisely

When we received the manual, we began checking voltages at various points and compared them with the manual. We chose our test points wisely to save time. By referring to the manual, it was easy to see that the voltage outputs of the power supply board were correct. However, the pre-amplifier and subwoofer crossover rails were low by 3 V. Consequently, we still suspected power distribution problems, but not originating on the power supply board.

We noticed the voltage on the collector of Q2 (see Figure 5) was 5.4 V instead of 35 V, and that the voltage on the base was 0.4 V instead of 0.1 V. This was obviously a big problem. We removed the transistor and found low resistance from the collector to the emitter in both directions. We needed an equivalent replacement, so we removed Q13 (refer to the complete schematic at the end of this supplement), which is the same transistor, and placed it on a curve tracer. After calculating the beta, we found an equivalent and installed the new

transistor. We also discovered an error on the schematic. Transistor Q4 is a 2SA number, so it must be a PNP type, but it is shown as NPN. (A 2SA transistor is high frequency PNP, 2SB is low frequency PNP, 2SC is high frequency NPN, and 2SD is low frequency NPN.) Never assume a service manual is error free.

Q2 Controls Coil

Before reapplying power, we noticed from the schematic that Q2 was controlling the coil of the muting relay on the pre-amplifier board (see Figure 6). We decided to look further as a precaution. It is good practice to try to understand why a semiconductor gets damaged before replacing it. Replacement sometimes just results in the destruction of the new component.

Diode Leads Were Shorting

Upon further inspection, we discovered the soldered leads of diode D19 on the foil side were bent over and shorting. This is what caused Q2 to overload. We suspect this damage occurred due to the absence of the bottom plate. If you recall, the first thing we did was inspect the PC board. Obviously, small defects and troubles can easily be overlooked during the initial inspection. To remedy the problem, we separated and shortened the leads.

We reapplied power and did not see much overall improvement; however, the

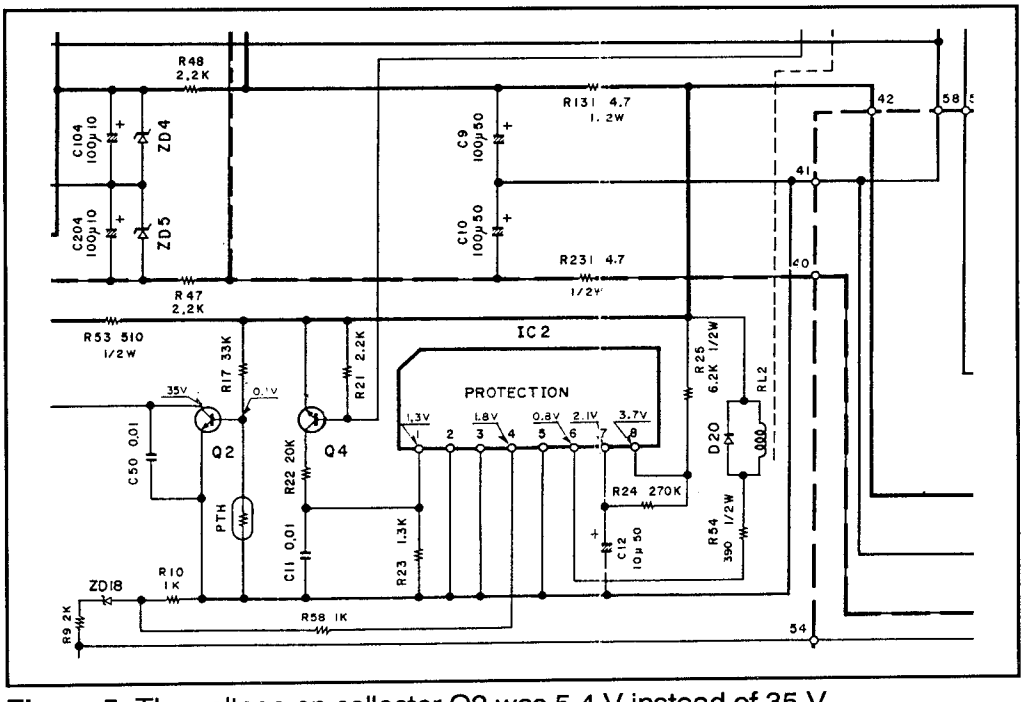

Figure 5: The voltage on collector Q2 was 5.4 V instead of 35 V.

voltage on Q2 returned to spec. The pre-amplifier voltage remained low. Obviously, a power distribution problem still existed since all the voltages did not return to normal. We then cut jumpers 51 and 52 (see schematic), which removed the subwoofer crossover circuit from the power supply. This isolated the subwoofer crossover circuit because it could be the source of the problem. Removing the jumpers raised the voltage to ±6 V, still too low compared to the expected ±8.5 V.

Disconnecting the Preamplifier

We decided to disconnect the pre-amplifier power connector and signal output, and connect our CD player output directly to the power amplifier's input (bypassing the pre-amp). This was done because we now suspected that the pre-amplifier was distorting because of the lack of supply voltage. This is characteristic of early distorting. When power was applied, the unit reacted erratically, drawing massive currents (up to 8 A) and producing a voltage across the output that blew our speakers. When performing this test, it is a good idea to use inexpensive speakers. For example, our test speakers cost only $3. We soon realized, after disconnecting the CD player, that the amplifier behaved "normally." From this, we concluded that the output impedance of the CD player was too low, and thus it loaded down the power amplifier driver circuits below tolerance.

Testing the Preamplifier

We checked the output of the pre-amplifier before reconnecting it to the power amp. We drove the input with a sine wave and connected the pre-amplifier out-

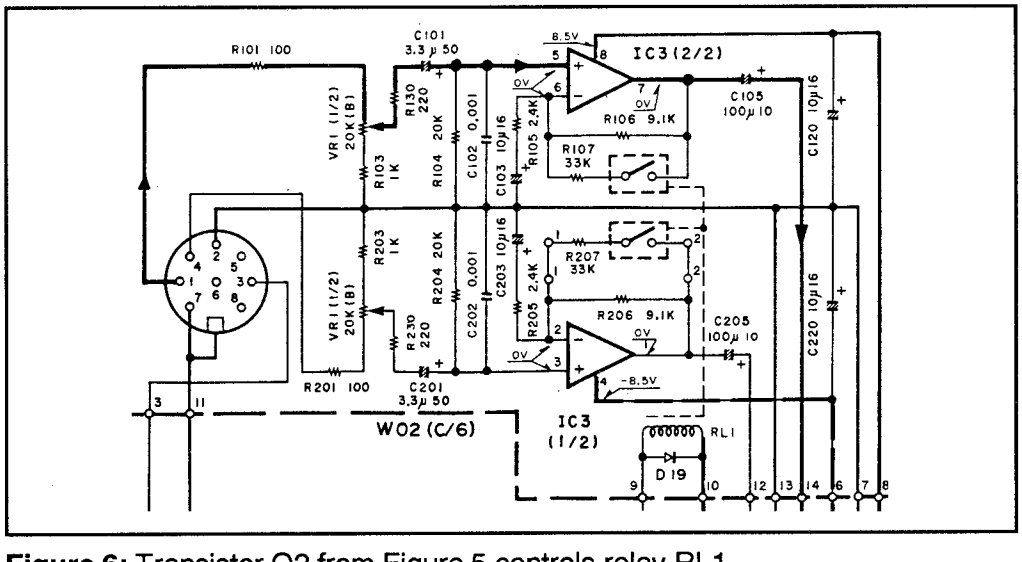

Figure 6: Transistor Q2 from Figure 5 controls relay RL1.

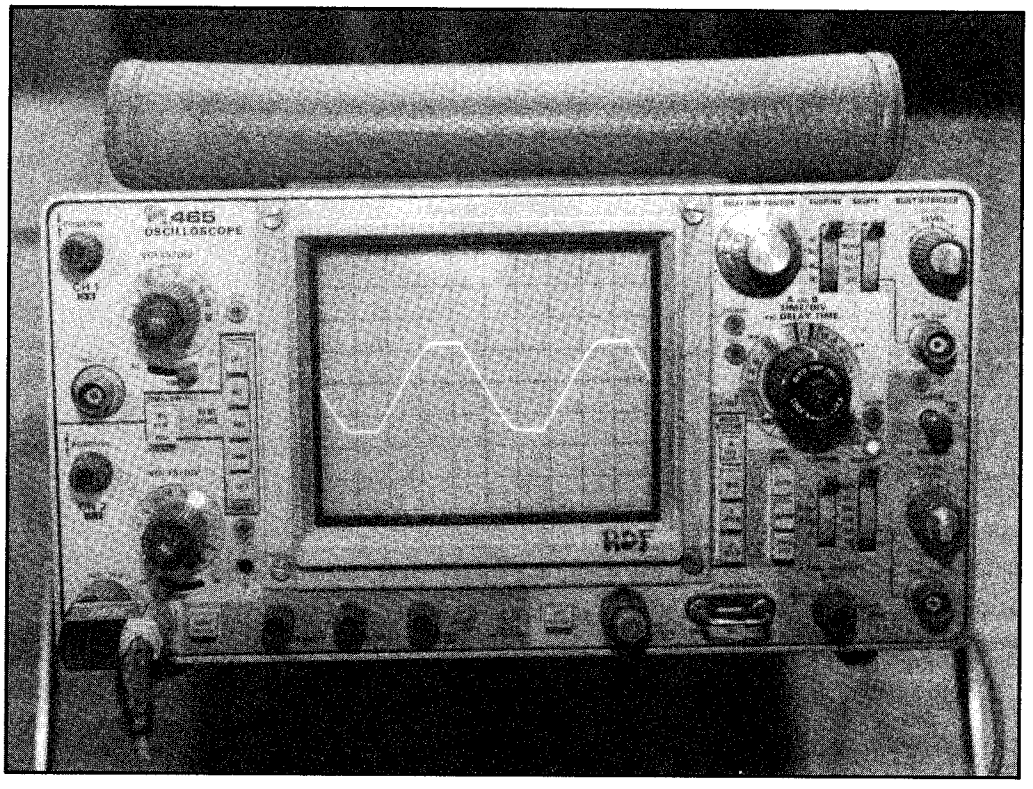

Figure 7: With an oscilloscope set to 5 V/div, AC coupled, .2 ms/cm, internally triggered, and using a standard probe, this is the type of display that was seen at the output of the preamplifier board at maximum gain. (A 1 kHz sine wave is injected into the amplifier at the RCA jacks). The waveform, which should have been an ordinary sine wave, showed noticeable clipping at 5 V, similar to what is presented in the photo.

put to an oscilloscope. As long as we had the pre-amplifier disconnected, we thought we should check it, especially since we suspected pre-amplification problems. Sure enough, the pre-amplifier clipped early (see Figure 7), showing that its output was bad. We were now almost certain that the problem was within the pre-amplifier itself or, more likely, the power supplied to the pre-amplifier.

Checking Zener Diodes

We decided to look further into the operation of the section that powers the pre-amplifier. After inspecting the schematic, we noticed two zener diodes, ZD4 and ZD5 (refer again to Figure 6). They are designed to equalize the plus and minus rails with a floating potential center lead. However, we noticed that the ground potential with respect to the chassis was nearing 4 V as the unit warmed. This just

did not seem correct. We removed the two zener diodes and checked them with an ohmmeter. Sure enough, ZD5 measured 2 KΩ in both directions. This explained the lower voltages.

The next challenge was to find the zener voltage of ZD5. The part number HZ9B2 did not help much so we had to rely on the oscilloscope. Luckily, ZD4 still worked so we could measure its zener voltage. We assembled the circuit shown in Figure 8, and with the oscilloscope in X-Y mode, found the zener voltage to equal 9 V (maybe the 9 in HZ9B2 meant something after all). We found an equivalent zener diode in our spare parts box and installed it.

Voltage Returned to ±8.5 V

After replacement and power up, the pre-amplifier voltage returned to ±8.5 V and the ground returned to zero potential. We reconnected the pre-amplifier and the unit worked fine. This completed the distortion repair process. Keep in mind, though, that the subwoofer filter was still disconnected.

Troubleshooting the Subwoofer Circuit

We now had to concentrate on the subwoofer low-pass crossover problem. Since the op-amp filter IC (IC6) works off the same power as the pre-amplifier, we were hoping that it would now work. After reattaching jumpers 51 and 52, it still still didn't work. Instead, the amplifier reacted by popping and drawing massive amounts of current when the subsection was turned on. This behavior was similar to what happened when our CD player was used as the input directly. We turned the subsection off and measured the voltages around the crossover section. All voltages met specifications. We concluded that we had a defective op-amp IC.

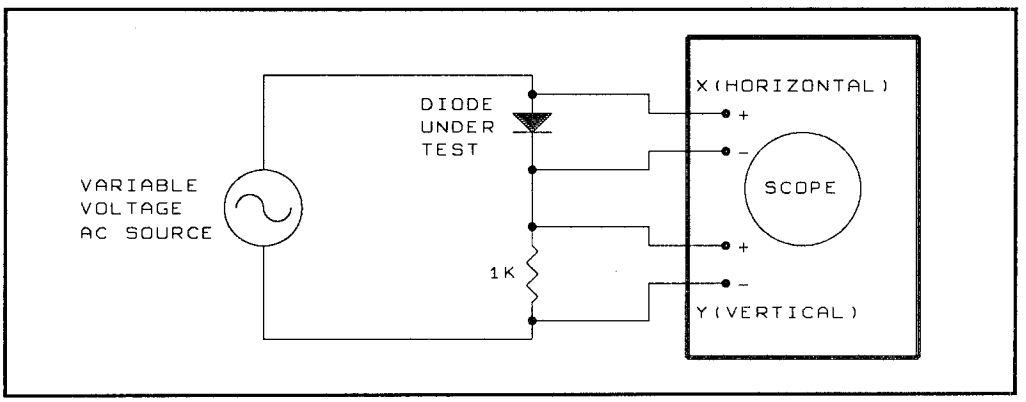

Figure 8: The zener diode test circuit.

Replacing the Op Amp IC

We purchased the chip (NJM2058D) from a dealer for $7.89 plus tax (seven days shipping). After replacement, the crossover now worked. The op-amp's output impedance must have been lowered by the bad chip.

Final Repair Procedures

We re-insulated all exposed wires with heat-shrink tubing and cleaned up all connections and wires. We also performed the 12 mV power amplifier adjustment covered in the service manual just because we had it apart. We completely reassembled the unit and obtained a bottom cover.

Conclusions

You will note that we never checked the actual power amplifier circuitry, even though the problem involved poor amplification. When both channels appear to have the same symptoms, suspect a power supply problem first. This unit is a good example of knowing where to look for a problem.

You should realize that most repairs like this require plenty of patience and are almost impossible to repair without a service manual. We usually attempt the repair without documentation, but there reaches a point when the repair cannot be performed without it. On the following pages are block diagrams that trace the solution of the amplifier distortion and subwoofer popping problems. These diagrams show the thought process used to solve these particular problems, and also indicate other directions you might take if different results had been found.
— *Dana DeMeo*

The author would like to thank Kenwood for permission to reprint selected materials.

Problem: Both channels of the amplifier disort at low volumes

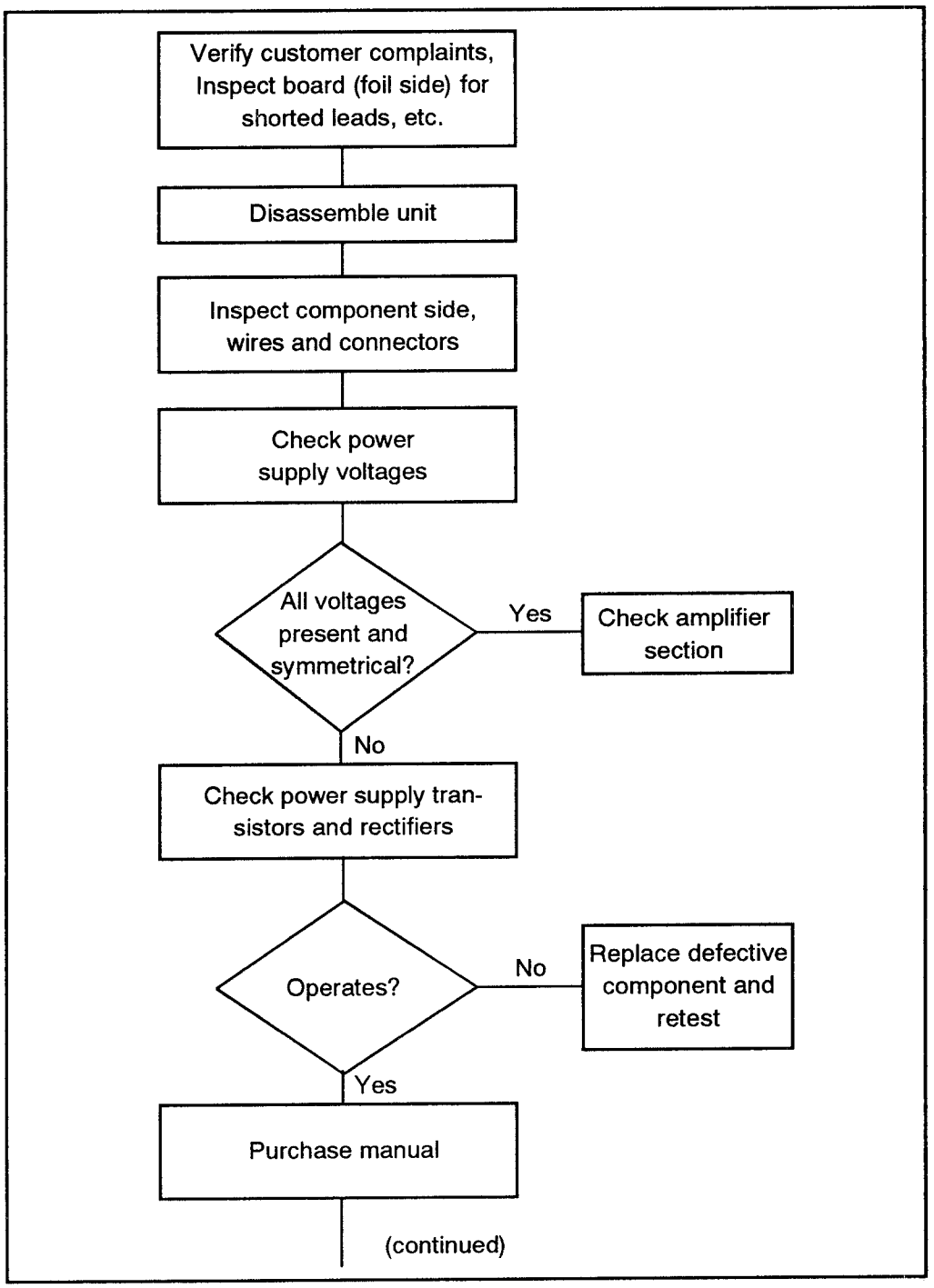

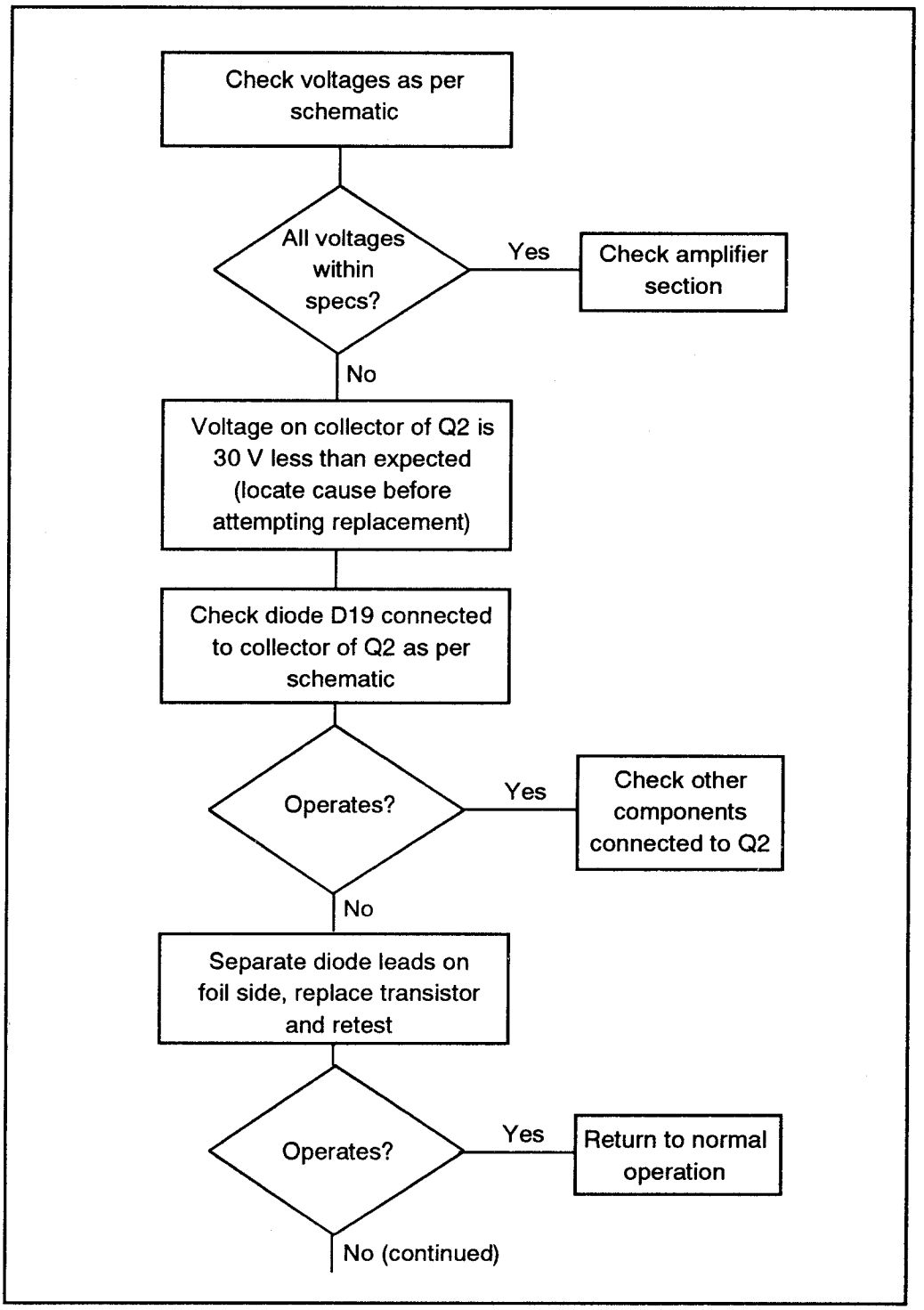
Check voltages as per schematic
All voltages within specs?
Yes
Check amplifier section
No
Voltage on collector of Q2 is 30 V less than expected (locate cause before attempting replacement)
Check diode D19 connected to collector of Q2 as per schematic
Operates?
Yes
Check other components connected to Q2
No
Separate diode leads on foil side, replace transistor and retest
Operates?
Yes
Return to normal operation
No (continued)

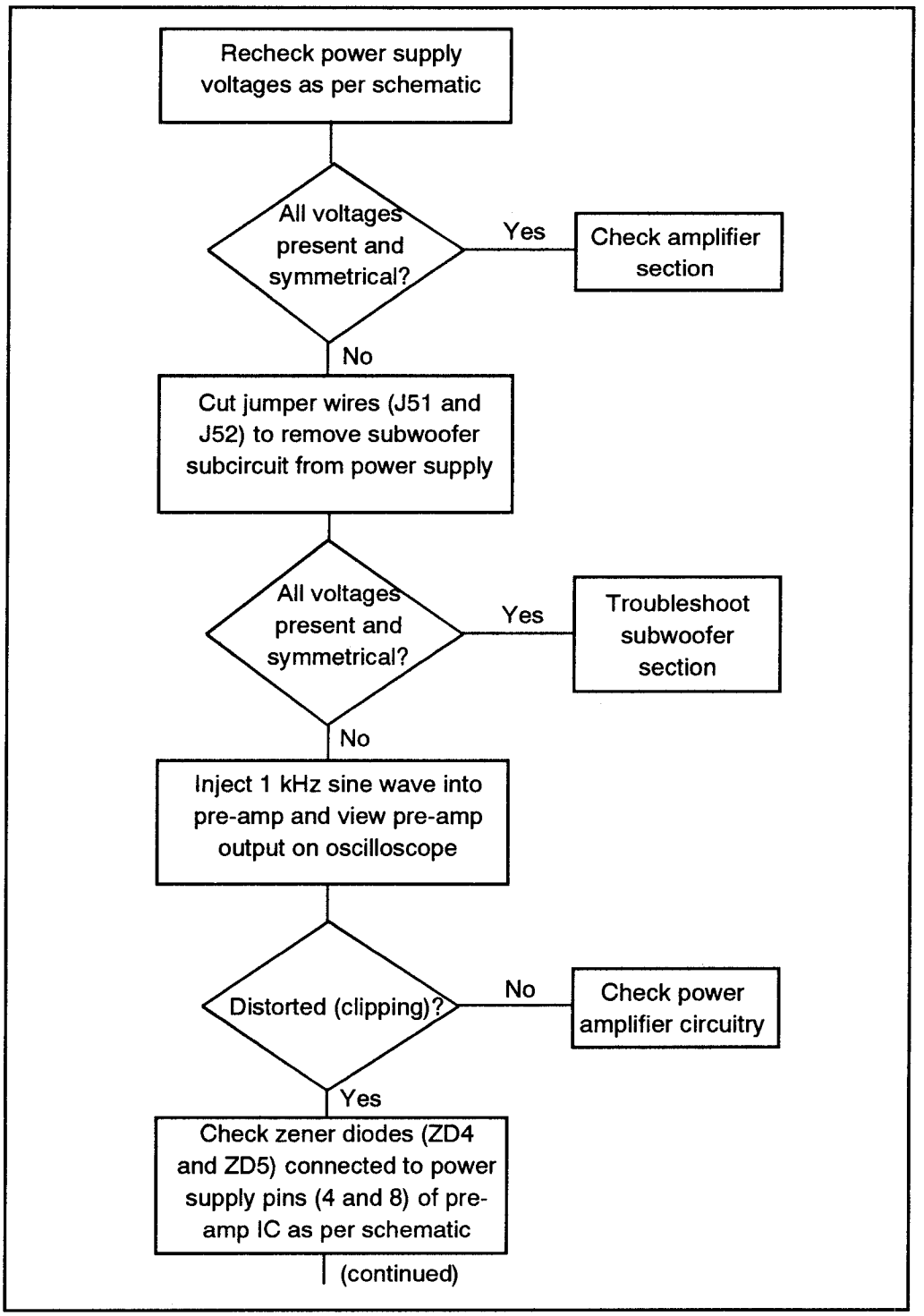
Recheck power supply voltages as per schematic
All voltages present and symmetrical?
Yes
Check amplifier section
No
Cut jumper wires (J51 and J52) to remove subwoofer subcircuit from power supply
All voltages present and symmetrical?
Yes
Troubleshoot subwoofer section
No
Inject 1 kHz sine wave into pre-amp and view pre-amp output on oscilloscope
Distorted (clipping)?
No
Check power amplifier circuitry
Yes
Check zener diodes (ZD4 and ZD5) connected to power supply pins (4 and 8) of pre-amp IC as per schematic
(continued)

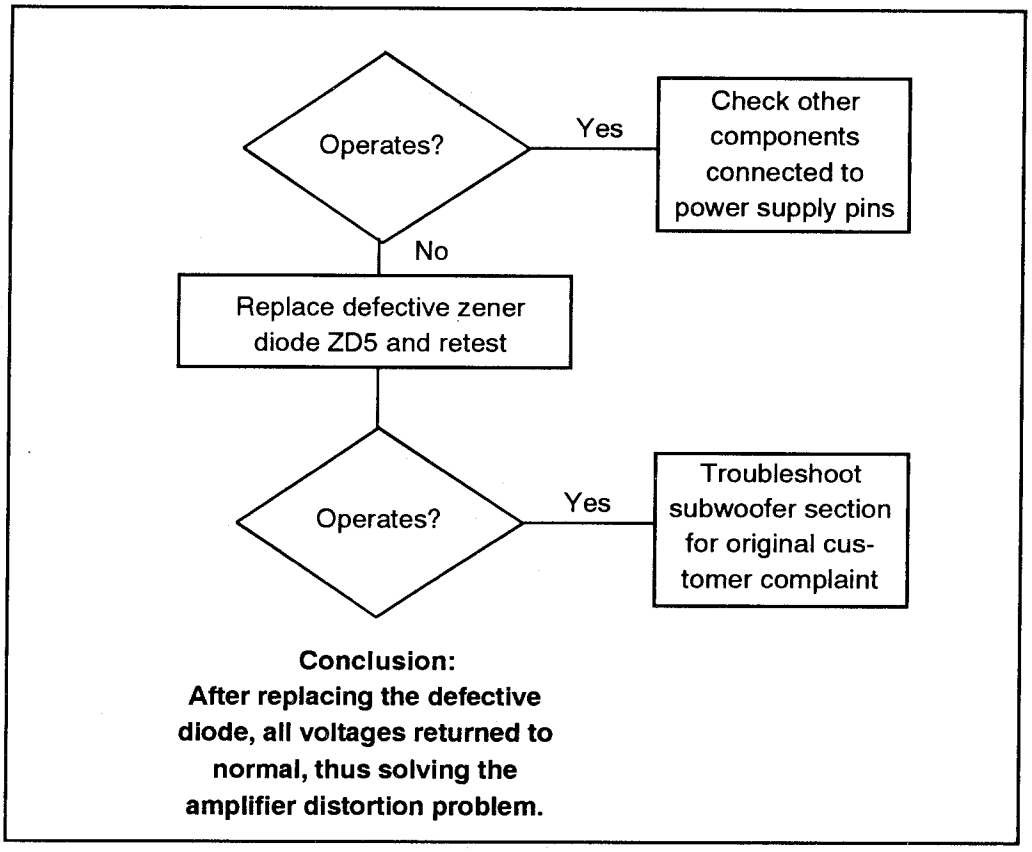

Problem: When activated, the subwoofer crossover feature causes loud popping at the output

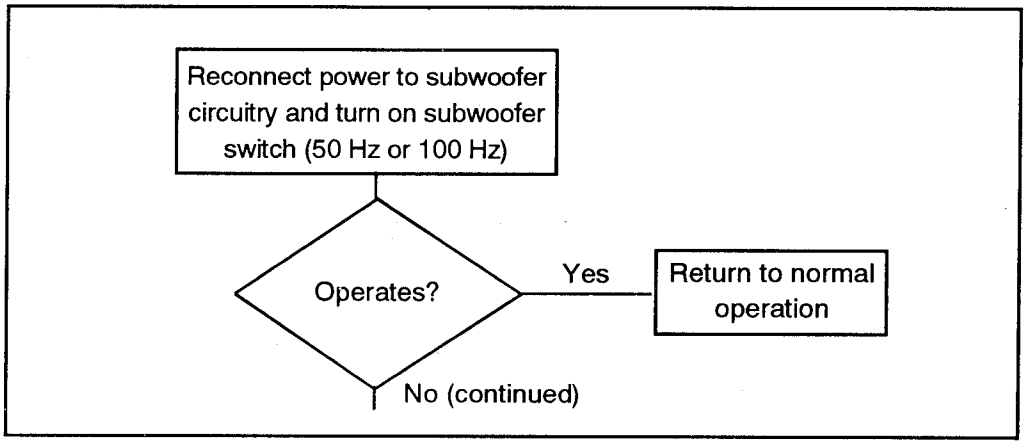

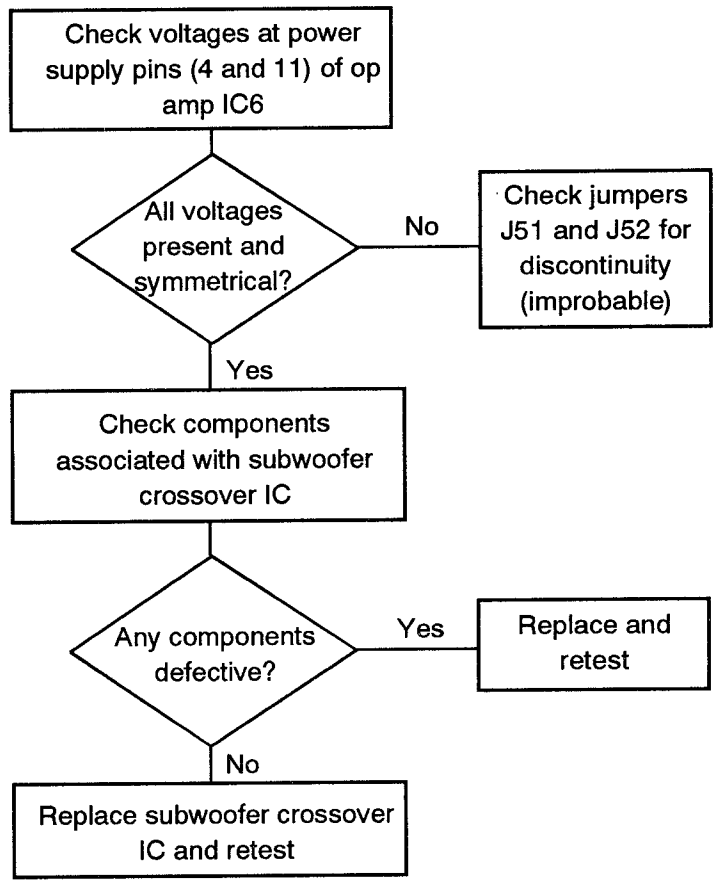

Conclusion:
Replacing the subwoofer crossover IC solved this part of the repair problem.

8/VCS - So
Sony

8/VCS - So - CA
XM-3040 Car Amplifier

Solving the Problem of an Overheating Car Amplifier

Smoke gets in your eyes in this case study of a Sony XM-3040 car amplifier. When the customer brought the unit into the shop, it was clean and unscratched, with no signs of abuse whatsoever. The customer claimed that while playing his car stereo loudly one day, the music gradually began to distort until finally it became unintelligible. He immediately turned off the radio, got out of the car, and opened the trunk to take a look. He found the amplifier smoking. The heat sink on the unit was hot enough to cause a burn. After cooling down, he turned on the stereo again, but the protection light remained on, and no output could be heard.

Blown Transistors

After listening to this story, we immediately assumed that the power transistors in the final output stage of the amplifier had blown out. When an amplifier's heat sink gets red hot, the culprit is usually a blown power transistor.

Repair Procedure

We already had a service manual on hand for this repair, and felt certain that it would be needed. We applied power to the unit to verify the customer's complaints. Both the *Power* and *Protection* LEDs illuminated. We also attached a DMM (not a speaker) to the outputs of the amplifier and measured the voltage. We measured 0 V across the speaker terminals. No excessive current drain was present, nor any obvious heat generation by the unit.

Visual Inspection

We removed four screws from the bottom of the unit and lifted away its two covers. Figure 1 shows the top view of the XM-3040 amplifier with the cover removed. We visually inspected all parts and wires for burns or cracks. Then we removed all the screws securing the PC board to the heat sink and slowly lifted the board. Finally, we removed the LED indicators from the chassis to completely separate the amplifier. Figure 2 shows an exploded view of the entire

disassembly of the unit. We inspected the bottom side of the board for cracks or charred traces. Nothing appeared to be charred or physically defective.

Using a DMM, we tested the large power transistors. Considering how hot the unit supposedly had become, we were sure these transistors were all bad.

In the circuit, the transistors were shorted (see Figure 3). As a result, we unsoldered them and checked the resistance form collector to emitter. As expected, all eight power transistors were shorted. Even though the transistors were defective, we did not immediately replace them. Replacing the transistors at this point might just cause the new ones to blow out again.

Instead, we applied power, and carefully measured the voltage on each transistor's collector and base solder pads. Each measurement was the same, 0 V. We had hoped to see ±27 V on the respective collectors of the push-pull transistors and

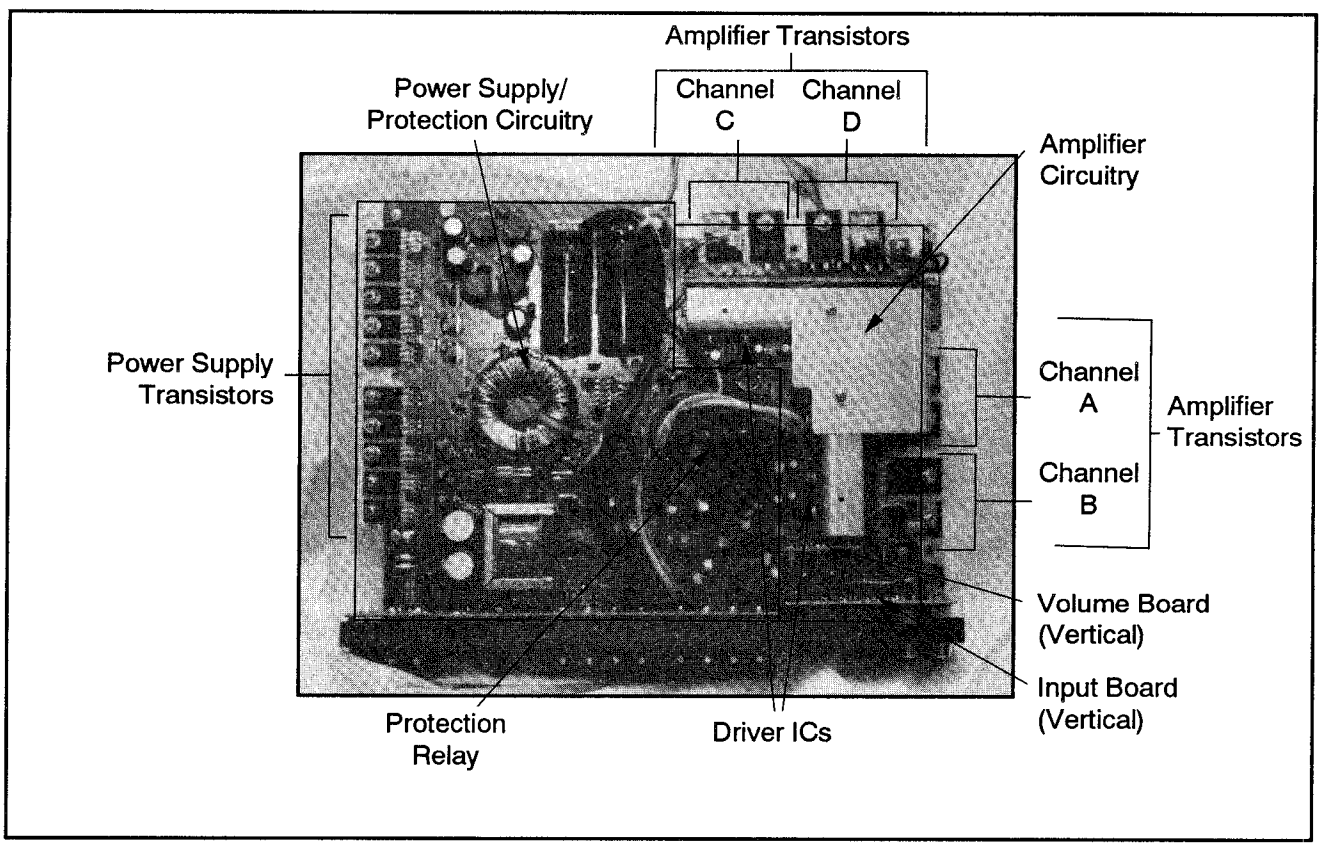

Figure 1: Top view of the XM-3040 amplifier with the cover removed

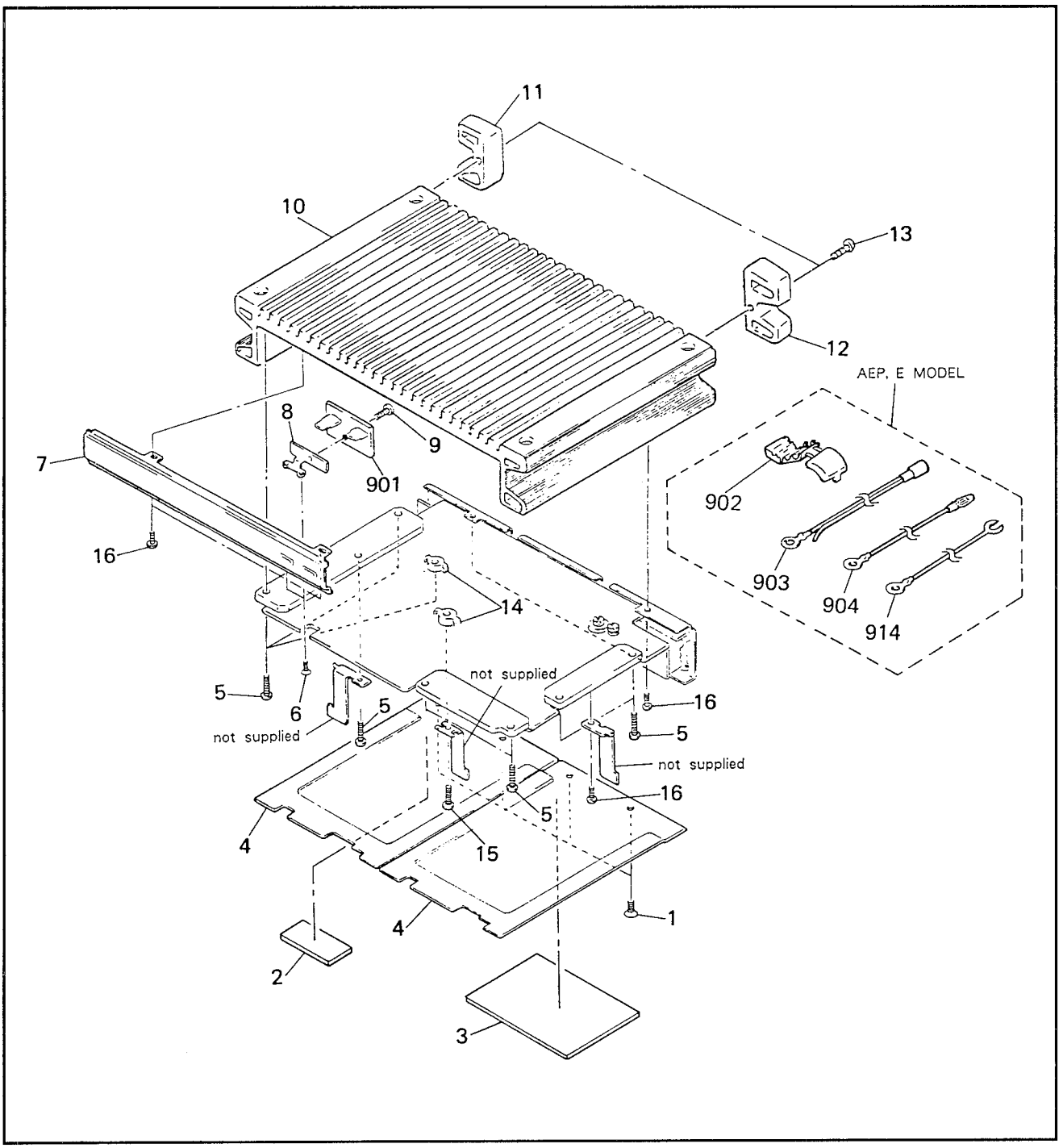

Figure 2: Exploded view of the XM-3040 car amplifier

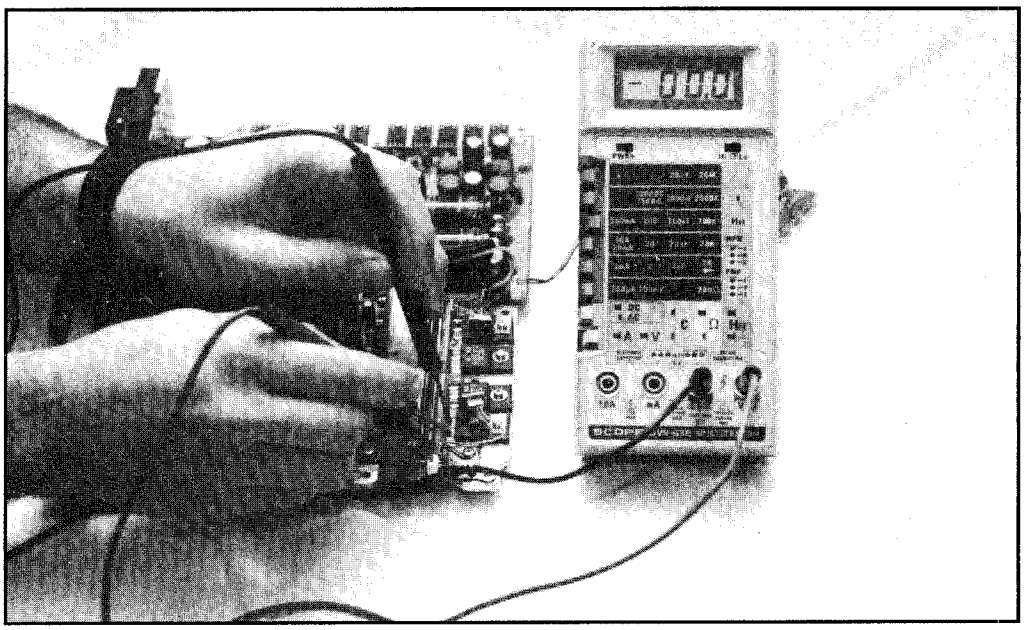

Figure 3: The DMM shows a short on the power transistor

a low voltage on the bases. With the transistors removed, the unit remained in protection mode just as before.

Hairline Crack

We now measured the output voltages on the center leads of D556 and D555 (see schematic). Whenever troubleshooting an amplifier, always start from the power supply. These two diode packages are the origins of the DC rails that power the amplifier. It is a good starting point, and shows if you must troubleshoot into the power amplifier or into the power supply. No voltage was present on either lead. After taking a closer look, we discovered a hairline crack in the D556.

Test D556 and D555

We removed and tested both the D556 and D555 with a DMM (see Figure 4). Both tested open in all directions. We replaced these components with their equivalents and reapplied power. At the same time, we constantly monitored the temperature of the power supply transistors' heat sink and the current drawn by the unit.

Apply Power

With power applied, both lights illuminated; however, after a few seconds, the protection light went off and the relay activated. The unit appeared to be stable; there was no smoke or excessive heat. The amplifier now seemed to be getting power. To decide what to do next, we needed to see what voltages were present.

The power supply diodes measured near their respective ±27.5 V. This voltage was also present on the proper collector solder pads of the power transistors.

Replace Transistors

We decided that it was now safe to replace the blown power transistors with their respective equivalents and retest the amplifier. Of course, we made sure to use a voltmeter on the speaker terminals first to make sure no high DC voltage was present that could blow the test speakers. (Although shorted transistors usually cause the high speaker voltage, a defective μPC1270 driver IC can also drive the transistors into saturation, which would yield high speaker voltages.)

Test Amplifier

With power applied, the amplifier seemed to work fine. All speaker outputs were clean and powerful. The unit did not generate excessive heat nor draw too much current. We reassembled the amplifier and tested it for three hours by playing music at a high volume.

Reinstall Amplifier

We reinstalled the amplifier in the customer's car, and surprisingly, the original symptoms began to reappear. First the amplifier heated up rather quickly and then it started to distort. We quickly removed power before the transistors got damaged.

Continue Probing

Confused, we again removed the bottom plates and began probing. We needed to make sure that no damage was done. Luckily, everything measured to spec.

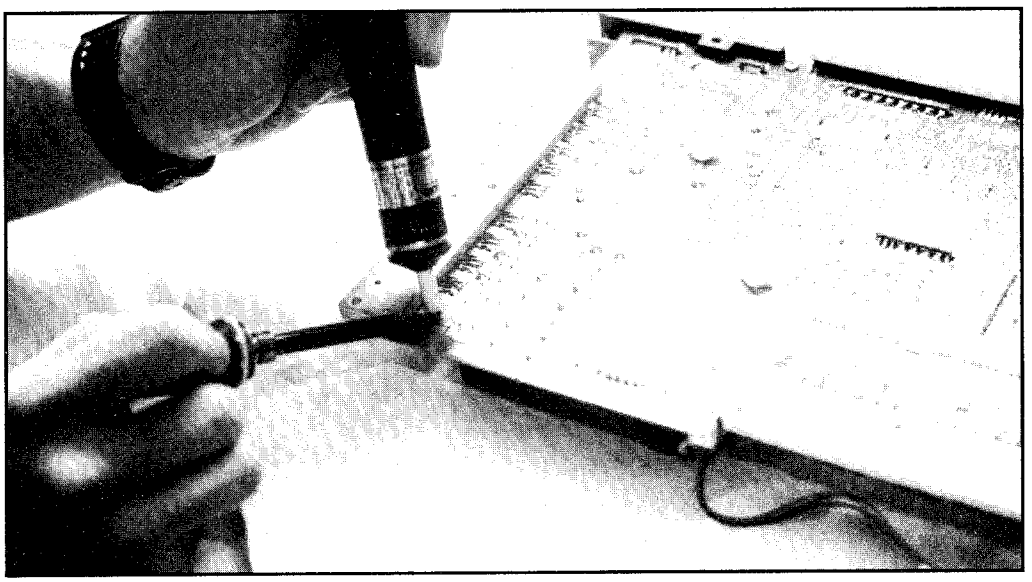

Figure 4: Desoldering D555 form the main PC board

The Sony XM-3040 car amplifier as it looked when it was brought into the shop.	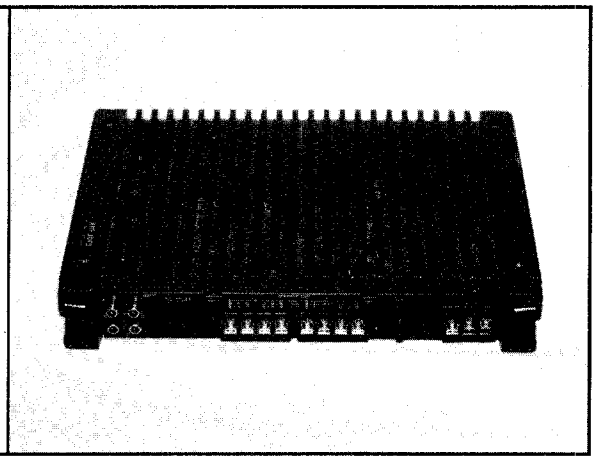
Removing one of the bottom plates of the XM-3040.	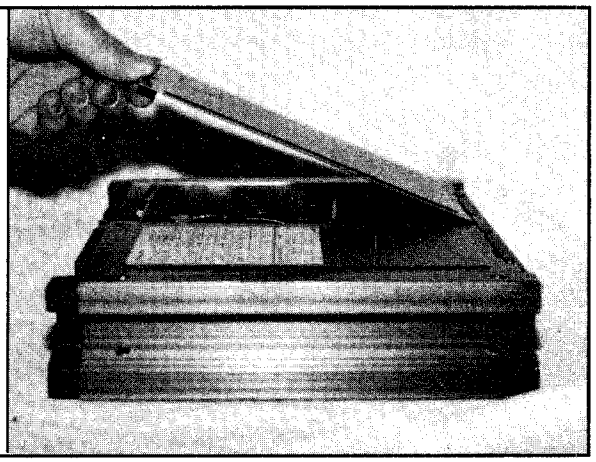
Removing the LED board of the XM-3040.	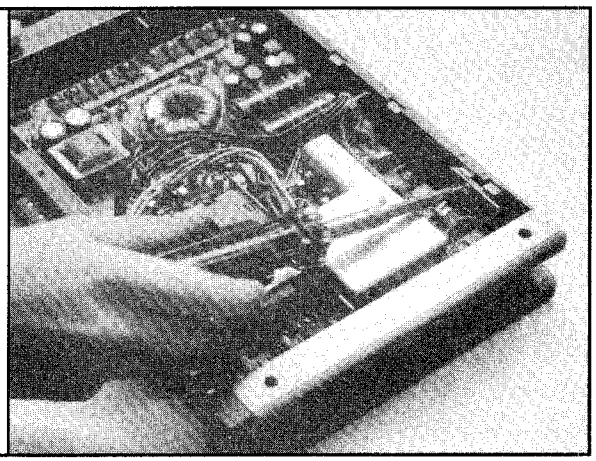

Lifting the main PC board of the XM-3040 out of the enclosure.

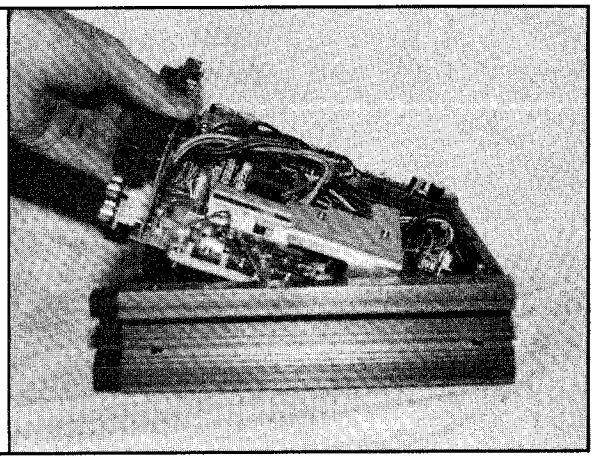

Removing one of the heat sinks to get at the power transistors.

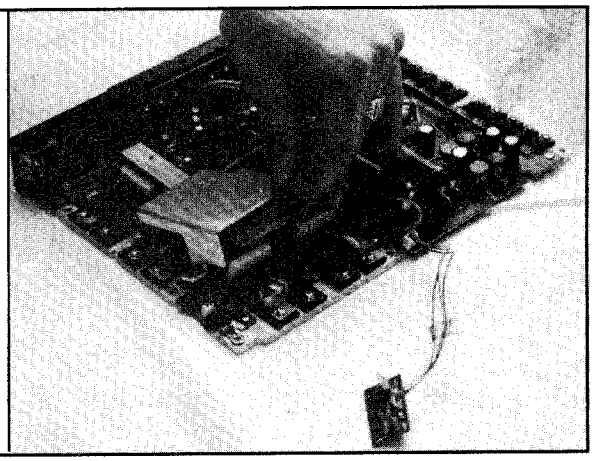

Desoldering one of the power transistors.

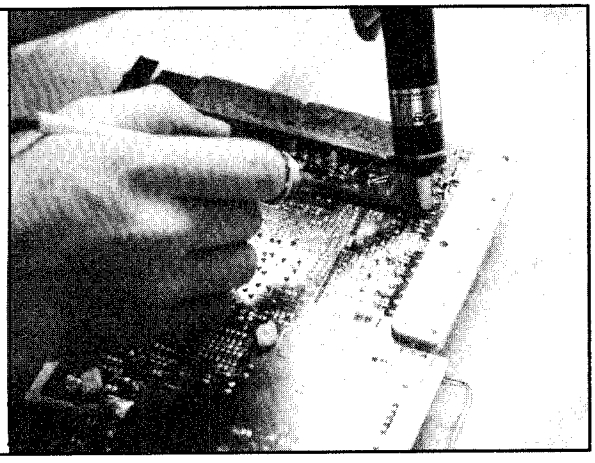

Checking the voltage on the output lead of diode D556; the measurement shows that power is not getting to the amplifier.

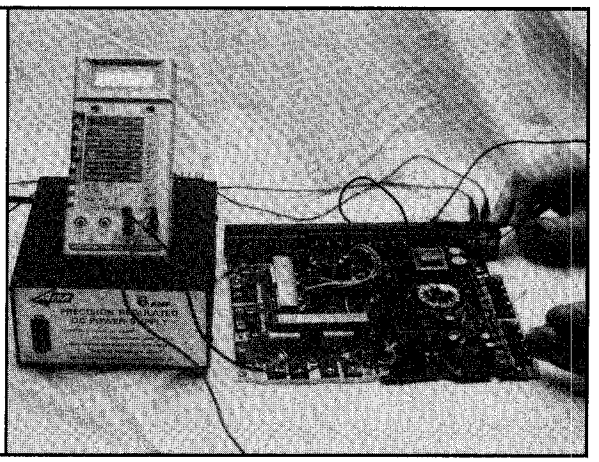

Testing diode D556 with an ohmmeter; the measurement shows that the diode is open.

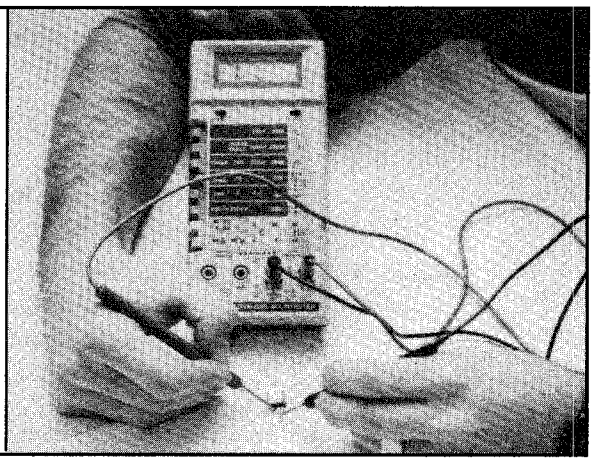

The major equipment used to do the repair.

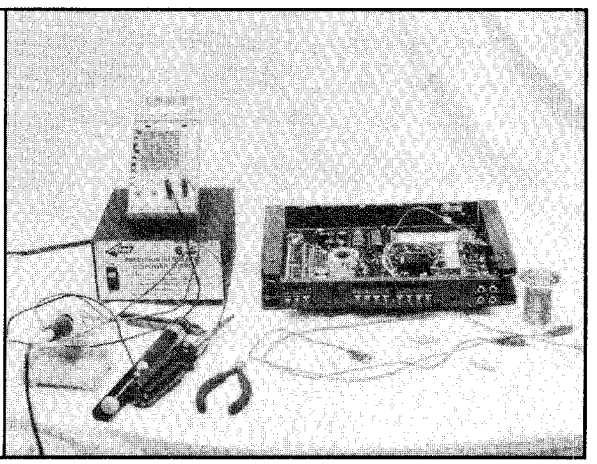

We retested the amplifier by again playing music at a high volume for a few hours. Then we moved the amplifier into another car and used it for two complete days — trouble free. As a result, we attempted to reinstall it in the customer's car.

Amplifier Heats Up

Once again, the unit acted erratically, getting too hot too fast, with moderately loud music playing. With the engine running, we measured the voltage applied to the power terminals of the amplifier by the car. We knew the amplifier was working, all the tests proved that. Therefore, there had to be something wrong with the customer's car. If the voltage supplied was too high, it would cause the amplifier to overheat.

Missing Ground Strap

Sure enough, the voltage measured from the +12 V wire to chassis was a little over 16 V. After some conversation, the customer informed us that a new engine had been installed in his car. After checking under the hood, we noticed something strange about the alternator. Its output was 13.8 V with respect to the engine, but a little over 16 V with respect to the chassis. This led us to make the final voltage measurement, from the engine to the chassis. The result showed that the engine was at a -4.3 V potential with respect to the chassis. We then realized that there was no ground strap connecting the engine to the chassis. This was the source of the entire problem.

Remeasure Voltage

We installed an engine strap and remeasured the voltage with respect to the chassis. The result was +13.8 V while the engine was running. This is the proper regulating voltage of a GM alternator. The amplifier now worked fine.

Conclusion

Sometimes repairs can extend past the workbench. In this case, the mechanic who installed the engine was to blame. The regulator within a Delco alternator regulates with respect to its outer casing, which is supposed to be ground. However, if the engine is not properly grounded (no ground strap), the potential of the alternator's casing will float away from the true 0 V potential, which is the potential of the battery's negative terminal. This results in an inaccurate regulation that can damage a lot more than an amplifier, especially if you have a computer in your car.

As for the actual repair, the higher voltage on the input to the amplifier caused the transistors to overheat. Once the junction temperature gets too high, the gain of the transistor changes severely and distortion (and eventually destruction) occurs. The diodes probably popped because of the excess current drawn by the

dying power transistors.

If the voltage output by the alternator had been correct, another probable cause for overheating would be the speakers. If the amplifier cannot handle a 2 Ω load, you need to verify that the car doesn't have any 4 Ω speakers in parallel. Also, you should measure the resistance of the speaker coils. Although a spec sheet will give the exact value, 5 or 6 Ω should be about right. Suspect bad speakers if the resistance is any lower. Furthermore, you should check the condition of the signal entering the amplifier. Make sure that the preamp, equalizer, head unit, or crossover is not distorting. — *Dana DeMeo*

Problem: An Overheating Car Amplifier

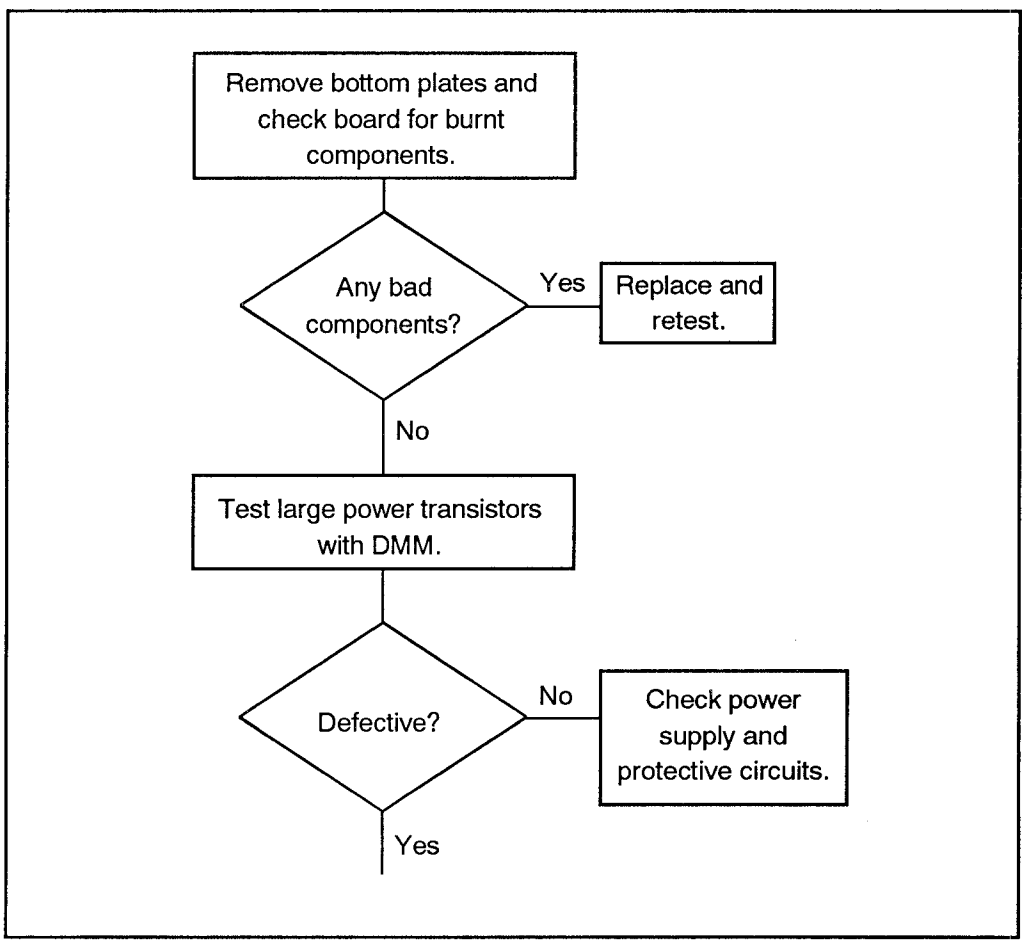

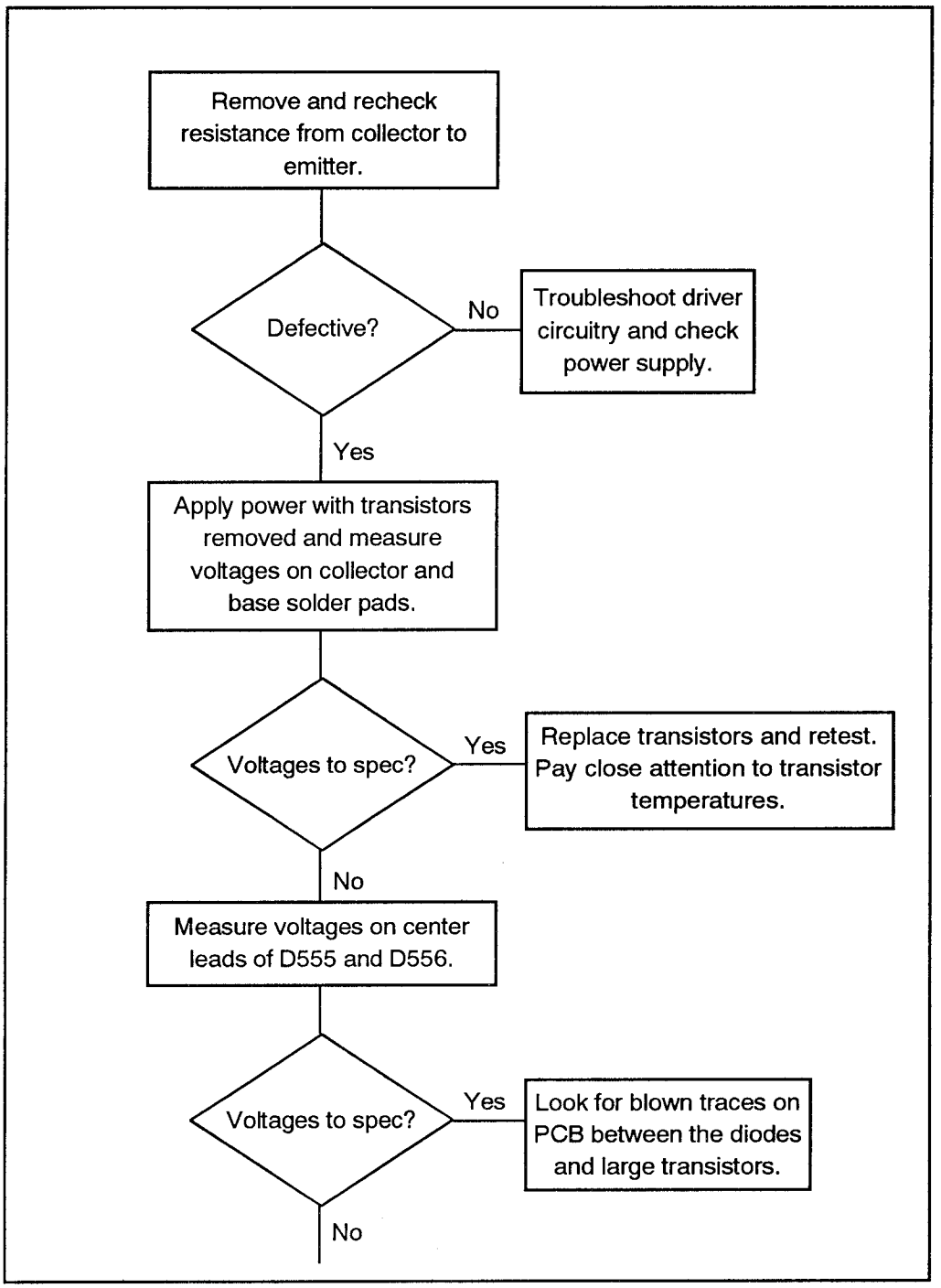
Remove and recheck resistance from collector to emitter.
Defective?
No
Troubleshoot driver circuitry and check power supply.
Yes
Apply power with transistors removed and measure voltages on collector and base solder pads.
Voltages to spec?
Yes
Replace transistors and retest. Pay close attention to transistor temperatures.
No
Measure voltages on center leads of D555 and D556.
Voltages to spec?
Yes
Look for blown traces on PCB between the diodes and large transistors.
No

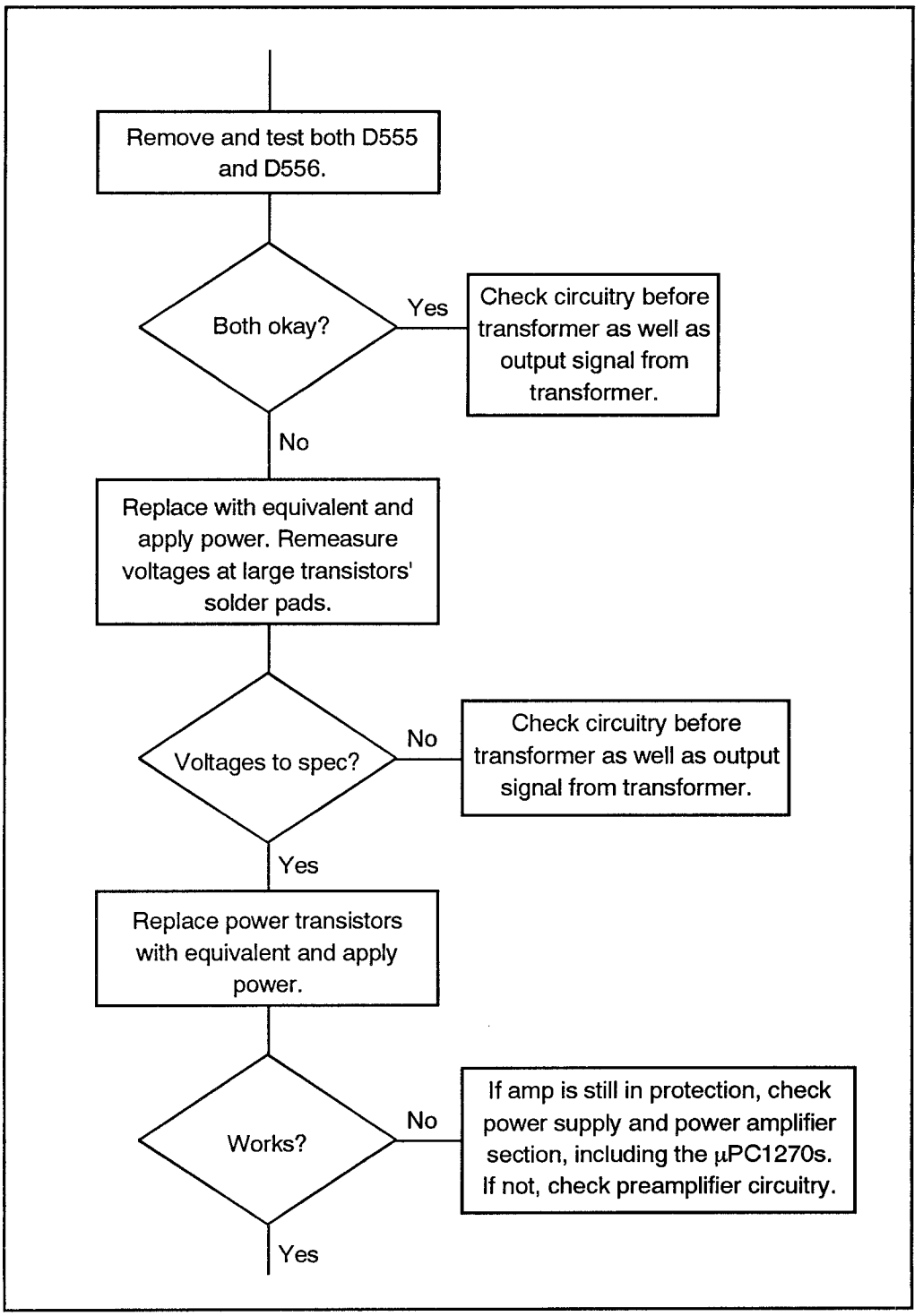
Remove and test both D555 and D556.
Both okay?
Yes
Check circuitry before transformer as well as output signal from transformer.
No
Replace with equivalent and apply power. Remeasure voltages at large transistors' solder pads.
Voltages to spec?
No
Check circuitry before transformer as well as output signal from transformer.
Yes
Replace power transistors with equivalent and apply power.
Works?
No
If amp is still in protection, check power supply and power amplifier section, including the μPC1270s. If not, check preamplifier circuitry.
Yes

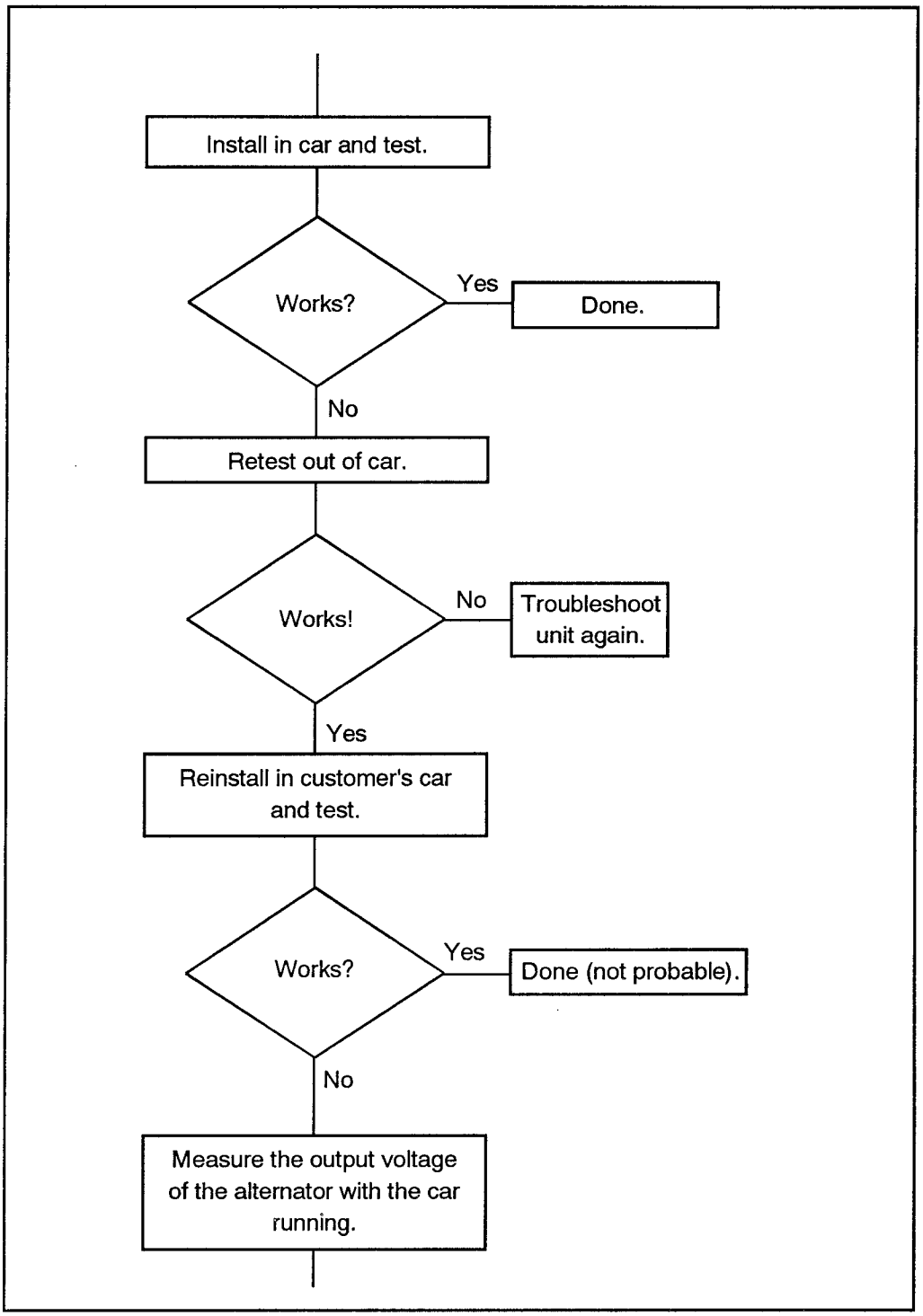
Install in car and test.
Works?
Yes
Done.
No
Retest out of car.
Works!
No
Troubleshoot unit again.
Yes
Reinstall in customer's car and test.
Works?
Yes
Done (not probable).
No
Measure the output voltage of the alternator with the car running.

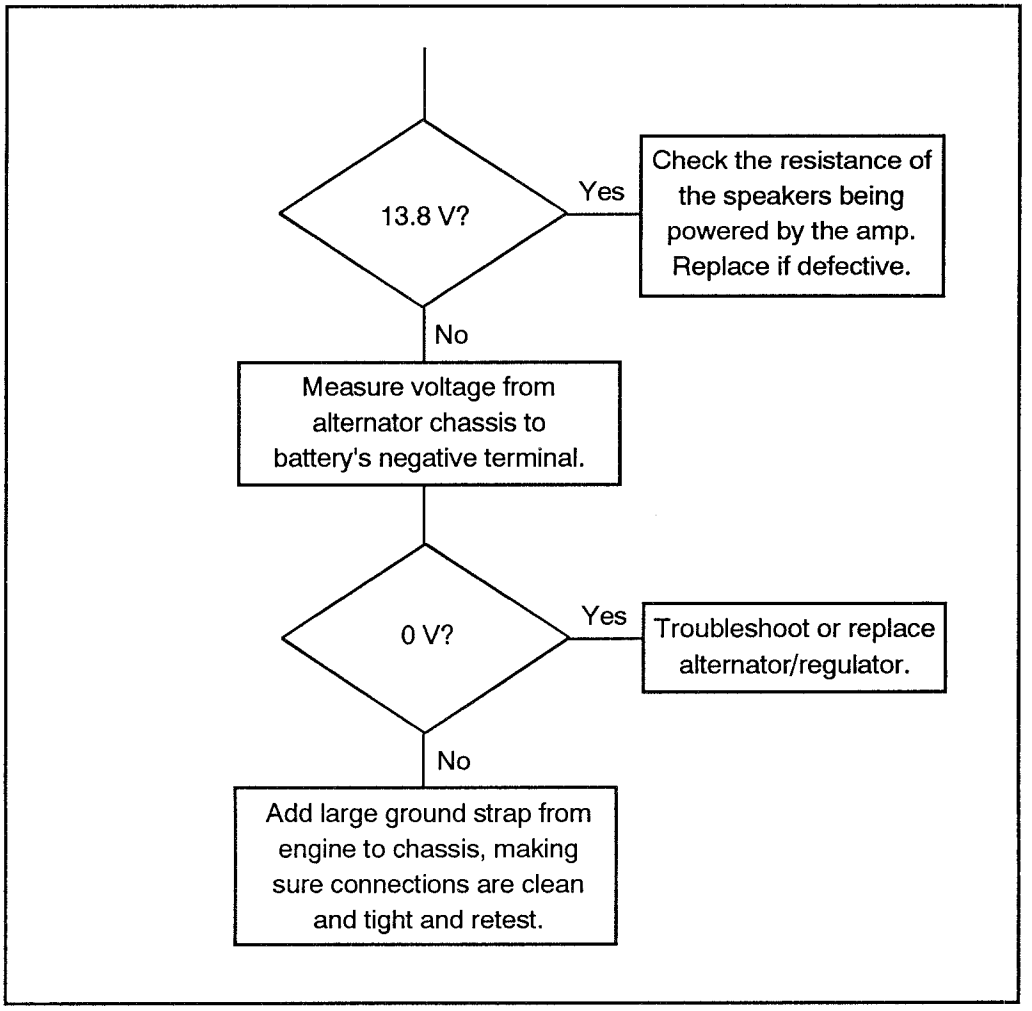
13.8 V?
Yes
Check the resistance of the speakers being powered by the amp. Replace if defective.
No
Measure voltage from alternator chassis to battery's negative terminal.
0 V?
Yes
Troubleshoot or replace alternator/regulator.
No
Add large ground strap from engine to chassis, making sure connections are clean and tight and retest.

Section 9
Computer Equipment

Table of Contents

9/PC *Personal Computer*

9/PC - AM *Architecture of Microcomputers*
9/PC - TE *Test Equipment*
9/PC - TR *Troubleshooting and Repair*
9/PC - TR - FDD *Floppy Disk Drive*
9/PC - TR - K *Keyboard*
9/PC - TR - PS *Power Supply*
9/PC - VCS *Various Case Studies*
9/PC - VCS - 286 *286 Computer System*

9/PR *Printer*

9/PR - A *An Introduction*
9/PR - M *Maintenance*
9/PR - TR *Troubleshooting and Repair*
9/PR - TR - LP *Laser Printers*

Table of Contents

9/PC
Personal Computer

9/PC - AM
Architecture of Microcomputers

Block Diagram

Microcomputer systems have a certain number of similarities in their construction. Figure 1 shows a simplified computer architecture.

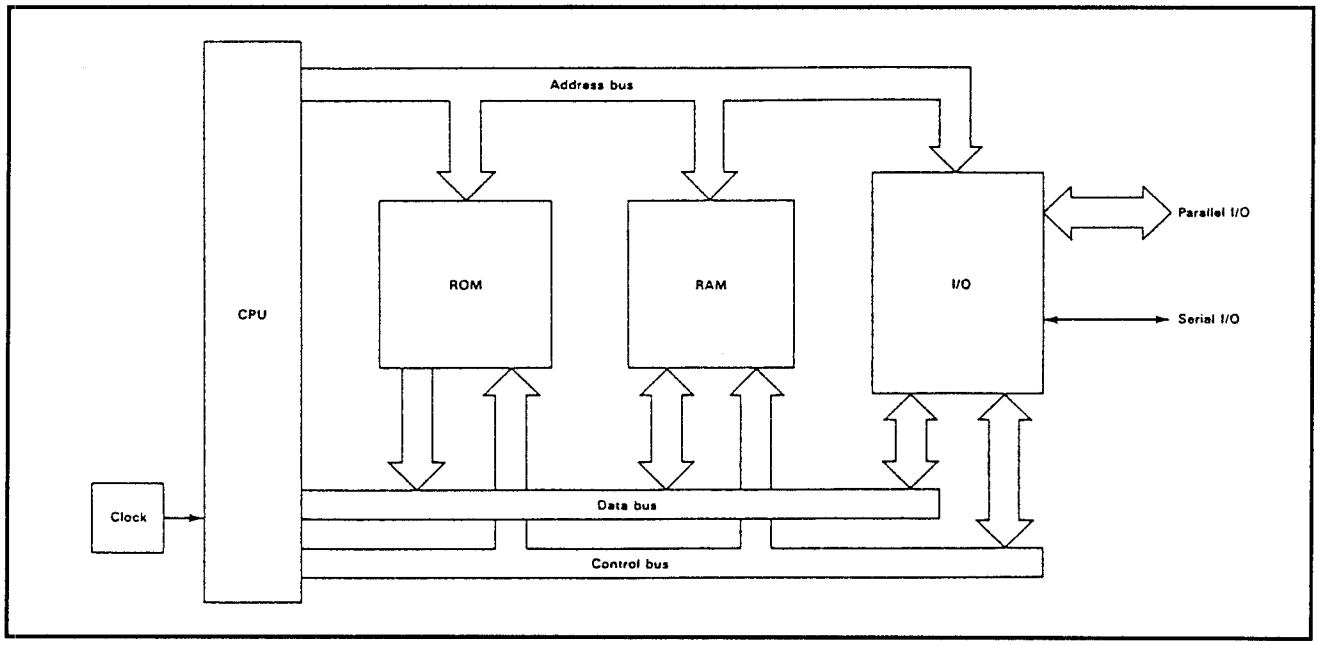

Figure 1: Block diagram of simplified computer architecture

CPU

The main control of any computer is the central processing unit (CPU). The CPU is the heart of the microcomputer system. It must accept instructions from a program, decode the information and execute it. CPUs of today are very complex with more than 68,000 devices within.

ROM

For the CPU to function, it must have a way to interpret and way of knowing what to do with the instructions being sent to it. The read-only memory (ROM) provides permanent (non-volatile) storage for control programs, operating systems and high-level language interpreters.

EPROMs

EPROMs (erasable-programmable read-only memory) can be used in place of ROM. These allow the ability to electrically re-program the IC when changes or additions have to be made to the various control programs and operating systems. In fact, many of the control chips used in PCs are EPROMs and not simply ROMs.

RAM

The random access memory (RAM) provides the read/write memory and is considered to be volatile memory since it will lose any contents if the power supply to the IC is interrupted. Some computers have battery-backed RAM. These RAMs are usually CMOS (low-current) memory and are used primarily for the long-term storage of system configuration. Most RAM used for program execution and data storage while running software will be dynamic type RAM which require refreshing in order to retain stored data.

I/O Devices

To communicate with the real world, the computer system requires some means of connection for peripheral devices such as keyboards, displays and printers. In addition, a means of connecting mass storage devices such as floppy or hard disk drives will be required. This is done by means of a number of input/output (I/O) devices. Some I/O devices transfer data a byte at a time and are known as parallel I/O devices, and others transfer data a bit at a time and are known as serial I/O devices.

Bus Systems

Connecting the various elements in a microcomputer requires a number of bus systems. There are the data bus, the address bus and the control bus that can be found in a microcomputer.

Data Bus

The data bus provides eight, sixteen or thirty-two parallel connected lines which link the microprocessor, RAM, ROM, and I/O devices. Data and microprocessor instructions appear on these lines as groups of eight, sixteen or thirty-two bits. The data appears in binary form as a pattern of lows (logic 0s) and highs (logic 1s).

Address Bus

The address bus can comprise 16 (or more) parallel connected lines upon which address information is placed. Unique addresses are used to identify memory locations and I/O devices. An address decoder is used to select a device whenever an address appears within a particular range (i.e. an address in the RAM, ROM or I/O space).

Control Bus

There may be as few as five or more than ten control bus signals depending upon the complexity of the microcomputer system in question. Typical examples of control bus signals are reset (when activated, this signal causes the system to be re-initialized) and a non-maskable interrupt (a signal which will demand the attention of the microprocessor regardless of whatever else it is doing at the time).

9/PC
Personal Computer

9/PC - TE
Test Equipment

There are only a few items that would be needed to fully test a PC. As with most hi-tech repairs of today, you will normally swap and replace complete sections rather than trying to locate the individual part at fault. Simple fixes like resistors, capacitors, diodes or cracked PC board etching could be easily found and replaced on the board. More severe problems usually require replacing the board.

Breakout Box

A breakout box is used to find problems in an RS-232C "serial" interface. It is designed to be connected in line with the serial cable. As the signal passes through the breakout box, LED indicators show the state of each of the signal lines. By watching the indicators you are able to determine if the interface is working correctly.

Breakout boxes can be as inexpensive as $25 and powered by the serial line, or costing more than $100 with a separate power supply and a jumper block. (Jumper blocks allow you to reroute some of the serial signals.)

PC Computer

Aside from using test equipment mentioned in Section 4 "Tools and Test Equipment", the use of a compatible PC on your workbench is a must. Having a unit in which you can insert expansion cards, peripherals and exchange power supplies is the best way to determine where problems are.

In a way, this is parts swapping in reverse. Instead of inserting a new board to test a suspected board, you are placing the suspect board into a system which you know to be operational in all other respects. If the suspect board doesn't work, you know that it is malfunctioning.

Compatibility is essential. You cannot plug a board from a Macintosh into an IBM-PC and expect it to work. The computer you have must also be capable of supporting the functions. Trying to test a hard drive in an old PC with a 67 W power supply probably isn't going to work.

This means that you'll either have to own more than one computer, or will have to limit this aspect of your testing to whichever you have.

Automatic Test Equipment

Various automatic diagnostic instruments are being manufactured now that can locate problems in just minutes. Such devices are used in place of the damaged computer's CPU. A cable from the test unit is plugged into the CPU slot and every circuit and component on the mother board is checked. This can save hours and expense in troubleshooting.

The problem is a common one. These testing units are costly, generally far more than the budget of even a well-established repair shop.

Logic Clip

A logic clip is similar in appearance to an IC test clip. The logic clip fits over the pins of an IC being tested. A series of LEDs on the top of the logic clip indicate the logic state of each pin. By feeding known signals to the IC, watching the output on the logic clip, and comparing the results with a truth table, you are able to tell if an IC is working correctly.

Logic clips are specifically designed to work with certain chip sizes (8 pin, 16 pin, 24 pin, etc.). They are relatively inexpensive (under $200). The logic clip is small and convenient to use.

Its LED's may be designed to glow one of two colors when the signal is either "high" or "low". The clip will be powered by the IC being tested and automatically identifies the voltage and the ground pins.

The logic clip can only be used with ICs that are capable of changing states at a slow rate rather than fast state changes. This makes it difficult to use in computers, but you may find it possible to locate software written for that particular computer that can cause certain tasks to loop in a way that that logic clip can read.

Logic Comparator

The logic comparator will compare a suspect IC with an IC that is known to be good. An IC clip is attached to the IC being tested. The known good IC is placed inside the logic comparator. The comparator will tell the operator if the two chips seem to be working the same or not. This is a simple Go/No-Go test.

The logic comparator is a fast way to check ICs in a circuit board. With a beginning price of about $1000, they are fairly expensive , a cost made worse because you also need an IC known to be good for the device to work.

IC Tester

The IC tester is a stand-alone unit designed to test ICs out of circuit. The IC tester will have an on-board computer that will diagnose the internal workings of an IC. It can have a library of test routines that can be recalled for various ICs.

The advantage of an IC tester is that you don't have to know too much about a circuit being tested. If the IC is in the tester's library, the operator can run the test routine by calling it up to check for a Go/No Go test.

With this type of unit, you are able to test each removable IC of a board, one by one. These units can start as low as $200.

CPU Simulator

A CPU simulator (or No-Op tester) replaces the operation of the CPU while testing. The CPU is removed and the simulator test connector is plugged in.

The CPU simulator can be set to send particular instructions down data lines and control lines. This will allow for checking to see if switching is being controlled properly by the CPU. This device is good for system boards that are completely dead (processing wise).

These testers cannot be used for testing dynamic RAM. RAM must be constantly "refreshed" and these signals come from the CPU. With the CPU removed, no "refresh" is sent.

On a computer with a 16-bit address bus, 8-bit bus, and 12 control lines, the simulator may have 34 or more switches. Each time a different step is selected, a switch may have to be changed. This could be very time consuming and you could easily loose your place.

Signature Analyzer

The use of a signature analyzer assumes that proper documentation for the specific machine or circuit you are working on is available. Also signatures (predetermined codes) for the circuits must be included in the documentation for the specific machine or circuit.

A signature analyzer is a Go/No Go tester. A specific code will be generated at a test point under certain conditions. If during these conditions the codes match a look-up table, the circuit is OK. If not, there may be a component that is bad.

It is possible for a tech to make his/her own signature readings by taking readings from an identical system and comparing the two.

These devices start at about $1000.

Disk Drive Exerciser

A disk drive exerciser may be computer based or stand-alone. A computer based exerciser would be software that continuously tells the drive to spin or to perform some other task. A stand-alone device would allow the testing of a drive outside the computer. The stand-alone devices can be quite costly. The software is often a part of an overall diagnostics package.

Diagnostic Software

One of the innovations that IBM put into their first consumer computers was the built-in power-on self test (POST). This runs a mini-check on the entire system each time it is turned on. The components checked are the CPU (central processing unit), ROM (read-only-memory), motherboard support circuitry, RAM (random-access-memory) and the major peripherals. The tests are brief and not very extensive, but they give the operator at least some idea when things are not working correctly.

Some of the POST error codes are audio, in the form of beeps. For example, when the PC is first turned on and completes the preliminary diagnostics, it will emit one short beep to indicate that all is ok. A longer beep or series of beeps indicates that something is wrong.

Audio Codes

Audio Code	Possible Fault Area
No Beep	Power supply
Continuous Beep	Power supply
Repeating short beeps	Power supply
1 long and 1 short beep	Motherboard
1 long and 2 short beeps	Video adapter card
1 short beep and bad/no display	Video cable and/or display
1 short beep and no boot	Disk cable, adapter, or drive

On most computers if the preliminary POST test is passed, the system will display the system memory that has been checked. The last number displayed will be the amount of memory that was tested properly (i.e. 1024 KB means 1 meg of memory was checked ok).

If the computer manages to get the display up and running and then develops a problem, it will indicate an error code on the screen. The device with the error will be displayed. The first two numbers are the device and the last two the error. If the last two digits are "00" the device is ok. Section "12/1-PC-POST" shows some of these error codes.

Most AT (and higher) computers have self checking diagnostic routines that can be run before any operating system is loaded. When you turn on the computer, the screen will indicate the key to press to access the diagnostics and setup sections. These are self-explanatory and will help track down possible problems.

Software

Other software is available for testing computers for problems. Software such as Norton's Utilities, PC Tools, Check-It and a variety of others are designed to completely test a computer with problems, as well as to perform periodic maintenance for disk drives and hard drives, and even recover from certain errors.

Some software like Spin Rite is available to reformat hard disks without removing the data that is located on the disk. These programs will also improve performance of the disk drive.

Realignment disks are available for those floppy drives that may drift. These are generally available from floppy drive manufacturers and they are documented for proper use.

There are also many public domain, shareware and "try before you buy" software programs available from your local Bulletin Board System (BBS). This is an excellent way to get good software at a cheap price.

For the professional shop, some computer manufacturers offer complete diagnostics packages containing diagnostic software and a manual (or manuals) dealing with the specific technical information on that computer. Sometimes this will even include some schematics.

9/PC - TR
Troubleshooting and Repair

9/PC - TR - FDD
Floppy Disk Drive

Power Leads

If a floppy disk drive is suspected of being defective, make sure that the problem isn't with the disk being used. Then check to ensure the power going to the drive is correct. The power leads for the connector should read:

Minimum	Maximum	-Lead	+Lead
+4.8	+5.2	2	4
+11.5	+12.6	3	1

Cables/ Connectors

Check that all the cables and connectors are plugged in correctly (not all are keyed to ensure Pin 1 and the red band are on the same side).

Refer to the POST error codes from Section *"12/I - PC - POST."* These codes will detect which drive is bad and will be 6.xx codes.

Check to see if the drive is configured correctly. ATs have software configuration CMOS setups that must match the drive or the drive will not work properly. Refer to running the setup protocol when starting the computer or rebooting. Make sure that the drive selected is the same kind being used. PCs and XTs will have jumpers that may be set wrong.

If the light on the drive stays on when the computer is turned on, it will usually mean the disk controller cable has been connected the wrong way. This does not do any damage to the disk drive. Turn off the machine and reverse the cable. The same may be true for hard drives.

Cables for floppy drives and hard drives are usually not interchangeable. The ribbon cable for floppy drives will have a twist of seven wires starting 9 wires from pin 1 (the different colored cable). This twist determines which drive is drive A and drive B.

3.5-inch drives can have one or two heads. Most will be found with two heads (information is written to both sides of the disk).

Read/Write Head

Each read/write head is built around a core of soft iron. The coil is tapered in the center to act as two separate coils. When information is written to a disk, a charge is applied to the coil creating a magnetized spot on the oxide layer of the disk. When the drive reads from a disk, the process is reversed. The magnetic spots induce lines of force in the soft iron core (disk head) which is then amplified to produce a signal.

Frequency Modulation

There are several different methods for storing information on a disk. One is the frequency modulation (FM) recording formation. Normal frequency of zeros occur at specific points or clock pulses. A double occurrence of these points is read as a zero.

Higher-density floppies use a method of encoding known as modified frequency modulation. Signals are read in a similar fashion as a laser reads the pits and lands on CDs, only magnetically. As transitions occur in the recorded signal, a "0" or "1" is read.

Some drives use a portion of the read/write head to erase the edges of each track as it is written. This prevents the overlap of signals from one track onto another.

Write Protection

A "Write-Protect" scheme prevents a disk from being written to. On a 5.25-inch disk there is a physical notch which prevents the drive from activating the head in the write mode. When this notch is absent, the disk cannot write. A 3.5-inch disk has a little slide that is set either open (write protected) or closed (not write protected).

Floppy Disk Types

The construction of a 5.25" floppy disk is shown in Figure 1. The casing of a 5.25 measures 5.25 inches on each side. The disk itself is made of Mylar and is coated on both sides with a metal-oxide material. There is an oval shaped opening on one end of the disk exposing it to the elements. Also there is an index hole used to give the drive a starting reference point when the disk is spun.

The disk is held by the center clamping rings. On the disk there should be reinforcing hubs to insure a good grip by the clamping rings. If not, the disk may spin irregularly.

Some cheaper disks have a no hub. If you experience problems reading data from these disks, try adding a reinforced hub ring.

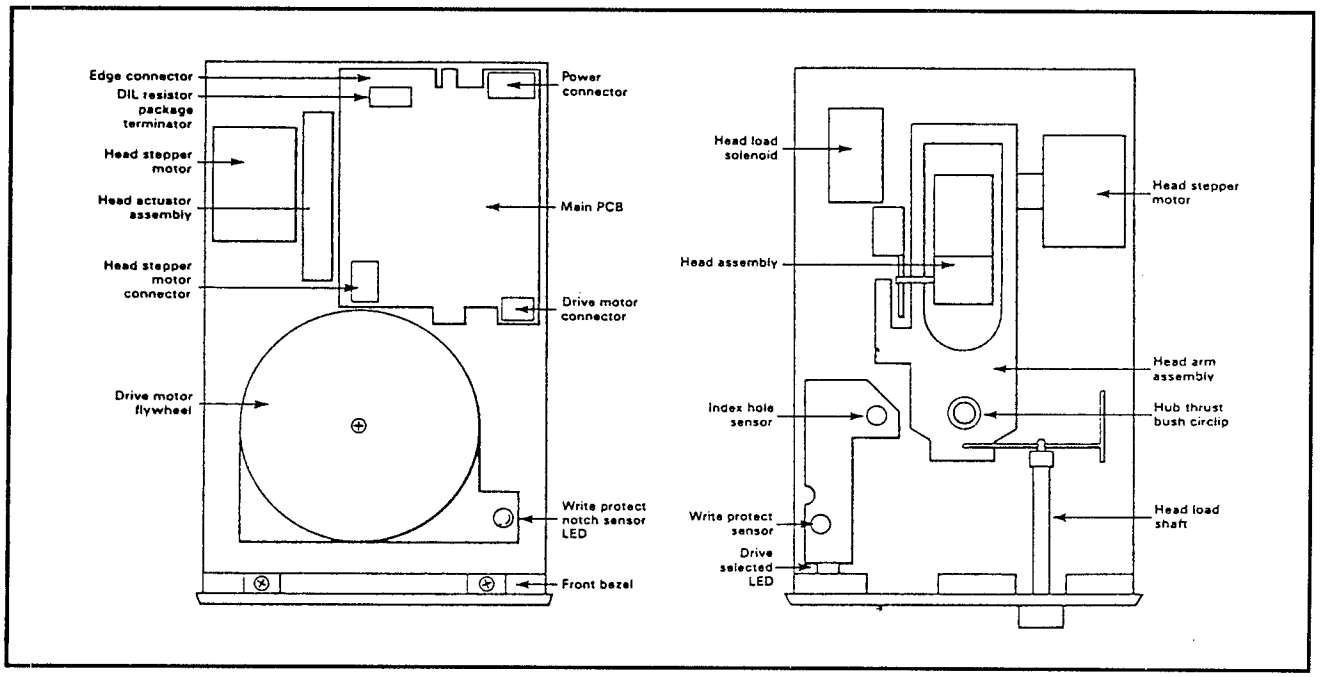

Figure 1: Typical 5.25 inch disk

The 3.5-inch disk is made of the same material as the 5.25 disk. The housing differs from the 5.25 disk. The 5.25 disk housing is soft and flexible. The 3.5-inch disk housing is rigid, less easy to bend.

The disk opening of a 3.5 disk is covered by a metal door that is pushed out of the way when the disk is inserted into the disk drive. This cuts down on the amount of dust that can get on the surface of the disk. The disk is not grabbed but sits on a center pin and is turned by a drive pin.

Head Movement

In a disk drive, one of the two heads will move up and down. This motion is used when loading a disk in a drive. The upper head pushes the disk toward the lower head. This happens when the disk is inserted into the drive and the head control is closed (for 5.25-inch disks). The disk grasping mechanism grabs hold of the disk.

For a 3.5-inch drive, the disk is inserted and drops down onto the center pin. The drive motor (which is directly below) spins until the disk drive hole is caught by the drive pin. The slide cover is also opened as the disk is inserted into the drive allowing the heads to come in contact with the disk.

Drive Motor

The main drive motor turns the floppy disk at about 300 RPM. The speed remains constant for most drives. Some drive motors vary the speed depending on where the head is located. The drive will spin slowest at the center and fastest at the outer edges.

Some drives have a pattern stamped on them to test the RPMs with a strobe unit. There will be usually two patterns, one for 50 Hz and one for 60 Hz. In the U.S., make sure you are reading the 60 Hz. The lines should not appear to move (or very little) when viewed. If so, a trimmer pot will need to be adjusted.

Stepper Motor

The drive head for floppy drives is controlled by a stepper motor. This motor causes the heads to move across the surface of a disk in steps to read the tracks on the disk.

Figure 2 shows how tracks and sectors are arranged on a floppy disk. Each concentric ring of the disk is known as a "track". The tracks are numbered from 00 to as high as 80, with the outer portion of the disk always labeled as track "00".

Each track is broken into subparts called "sectors". Sector reference can refer to a part of a single housekeeping function of the drive.

The index sector detector information is used to indicate the start of a track. These index characters are written after the disk detects the index hole in the disk.

Sector data or ID blocks allow the drive to identify the sector being read. The data block contains the data being stored in that sector. This data contains information about the sector like the track number, side of the disk, the sector number, and the sector length.

The last two characters in the ID block are the error checking codes. They are called the cyclic redundancy check (CRC) which, simply put, adds the total of the sector as stored, and when retrieved, the total must equal this number.

Intermittent Read/Write Problems

If a floppy disk has intermittent read/write problems, it may mean that the heads are dirty. It could be (although less likely) that the alignment has changed. Clean the drive heads with a head cleaner. These disk cleaners will be a wet/dry system that removes particles from the drive heads as the disk spins.

If the drive can read disks it has written, but can't read disks that were written on other drives or older written disks, there is an "interchange" problem and the disk drive will need to be aligned.

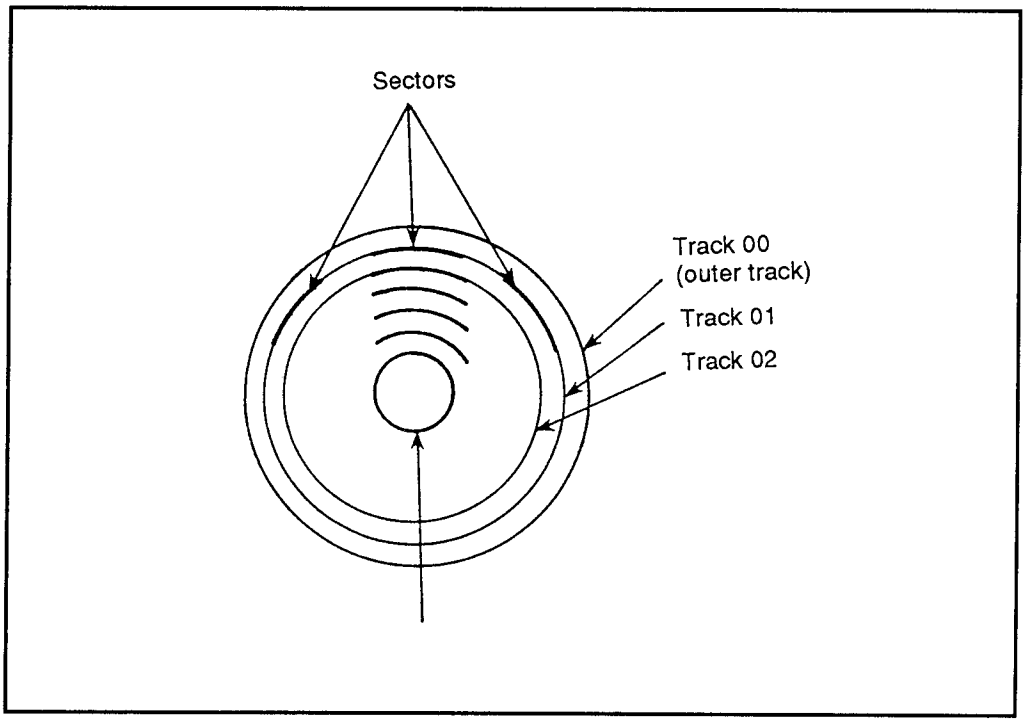

Figure 2: Disk tracks and sectors

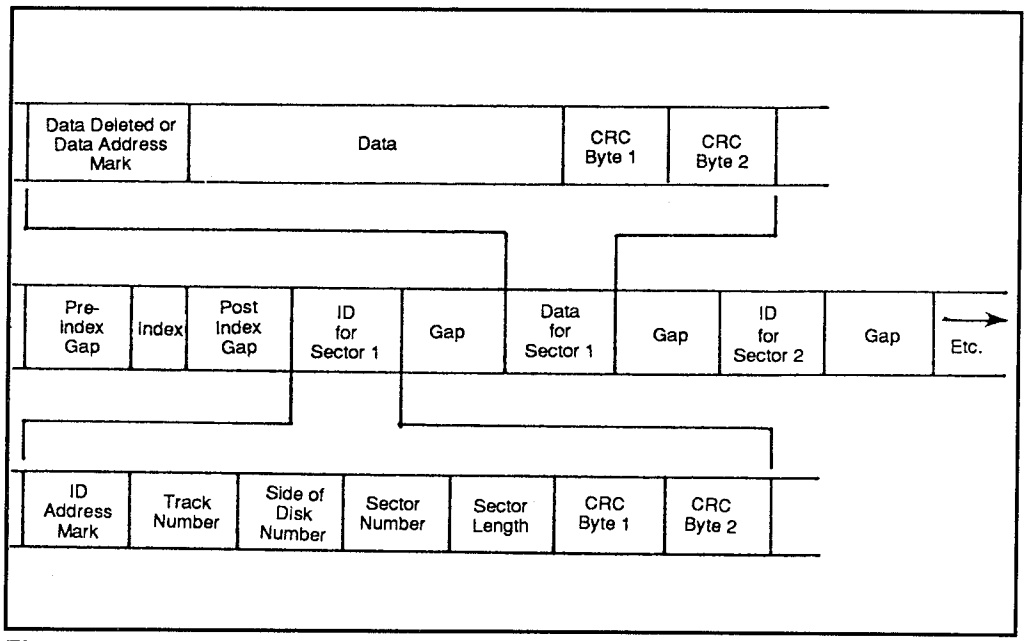

Figure 3: Track format

Some intermittent problems can be caused by poor operating procedures. Turning a computer off with a disk loaded (or the drive door closed so the heads are in contact with the disk) can damage a disk. When you first send power to a disk drive, it waits a few seconds to initialize the various circuits. A short amount of stay-data pulses may be sent through the disk head causing written changes to occur on a disk. Always open the disk drive door, or remove the disk when powering the unit off or on.

Interchange Problems

To do an alignment, you will need an alignment disk, exerciser program, and a good oscilloscope. Before using an exerciser disk, it will need to sit at room temperature for about 20 minutes. Floppy disks change dimensions slightly as the temperature changes.

There are some exercisers that can be purchased that plug onto the disk drive connector and exercise the drive (or cause it to spin) without the use of software. With the exerciser (software or hardware based) you can step the head in and out, check the motor speed and check the head alignment.

Some alignment disks can be bought for about $50. Others may be quite expensive, depending on the drive manufacturer. The alignment disk will be write protected, but when checking the drive if you manage to short the right pins on the drive board, you can write to the disk. Be careful.

The scope will need to be able to measure frequencies up to 30 MHz with dual trace. This will be needed to do the "head radial alignment" adjustment and the "index sector adjustment".

Rotation Adjustment

The first adjustment to be made will be the drive RPM check. The RPM of the drive should be 300 RPM ±5 %. There may be a software routine that can check the speed of the drive. Refer to the drive specifications for the proper pot with which to adjust the speed.

On those drives that do not have strobe patterns on the drive, you will need to use a frequency counter to check the motor speed. The drive documentation will indicate the best points for determining the speed.

Head Radial Adjustment

Head radial alignment assures that the disk drive head is positioned directly over the center of each track that it is reading. If the head drifts to one side of the track, the output from the drive will be unreliable.

This adjustment can be overdone and made to read the wrong track, so work carefully.

To do the head radial alignment, use the dual-trace scope. The vertical and sweep controls will typically be at 50 mV and 20 ms (depending on the drive and drive manual). The trigger will be connected to the sync test point of the drive and each channel will be connected to each of the head test points. Again, refer to the drive manual.

The computer should then be turned on and the exerciser program executed. The alignment disk is then inserted in the drive. The exerciser program is told to move the heads to step to one of the tracks that is recorded within the center of the alignment disk. On the scope should be a pattern as shown in Figure 4.

The head radial alignment is different depending upon the type of drive. The mechanism is adjusted while the drive is spinning and the results watched on the scope to achieve a waveform like that of Figure 4 (a).

Track Zero Sensor

The track zero sensor adjustment will not vary with normal use. The systems employed may either be a small micro-switch or a track zero sensing mechanism which uses a photo-detector switch. Both are shown in Figure 5.

The switches can be checked with a DMM or logic probe. A logic probe will be connected with the two leads to the +5 VDC and ground source on the disk drive. The micro-switch can be checked with a simple continuity check.

Turn on the computer and start the exerciser program. Instruct the computer to step the Read/Write head from track 0 to track 5 and back again. Watch the results with your logic probe. If the output on your test pin is "high" when the head is at track 0, it should go low as the head passes between track 2 and 3 (or the reverse).

It is possible that the switch is working and the drive head is not located over track 0. If this is so, check the positioning of the head with the oscilloscope and check the alignment. The disk manual will indicate the correct placement of the oscilloscope probe.

Carriage Stop

The carriage stop for most drives is some kind of sensor an arm passes through or a bumper that stops the carriage from slamming into the end of the travel rods. Usually this will not need to be adjusted, but if there is a problem, refer to the service manual for proper setting of this device.

Index Hole Adjustment

The head load adjustment tells the disk drive where the starting point of the spinning disk is. On some drives (5.25-inch drives) there is a physical hole in the disk used to reference the index point. Some drives may not use this hole and require

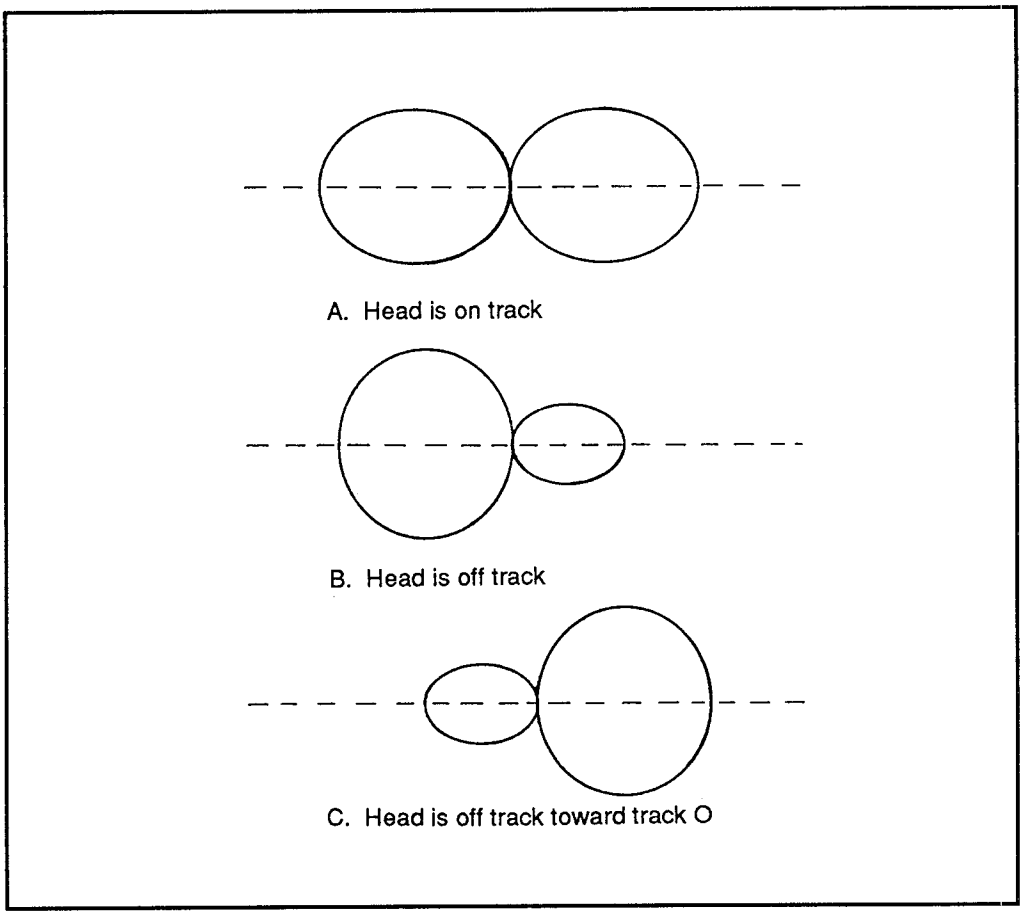

Figure 4: Head radial waveforms: (a) head is on track (b) head is off track toward track 0 (c) head is off track toward inside track

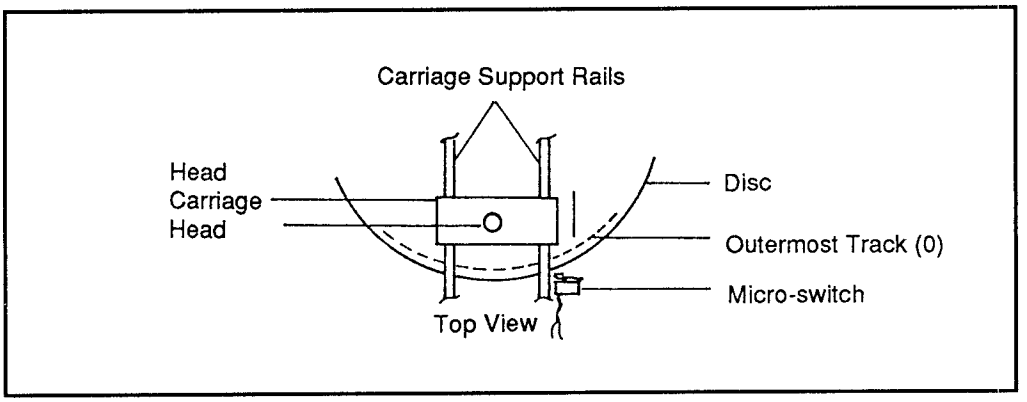

Figure 5a: Zero track mechanisms: micro switch sensor

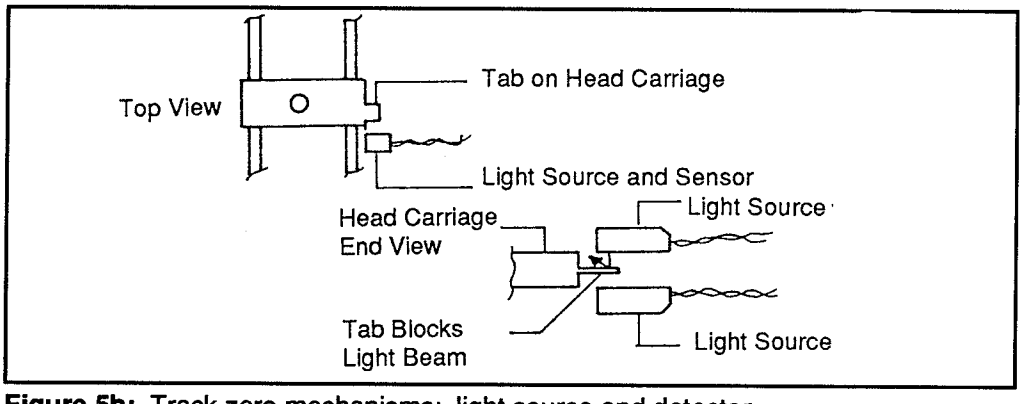

Figure 5b: Track zero mechanisms: light source and detector

no adjustment. The index timing mechanism is very simple. An LED or infrared light source is mounted on one side of the disk and a sensor on the other. Light is passed through the hole each time the hole passes the sensor. This will occur once with each revolution. Then an index signal is sent out.

To align the index timing, you will need to use the scope. Typical settings for the vertical control is -.2 V/div. and the sweep set is 50 ms. The scope is set to

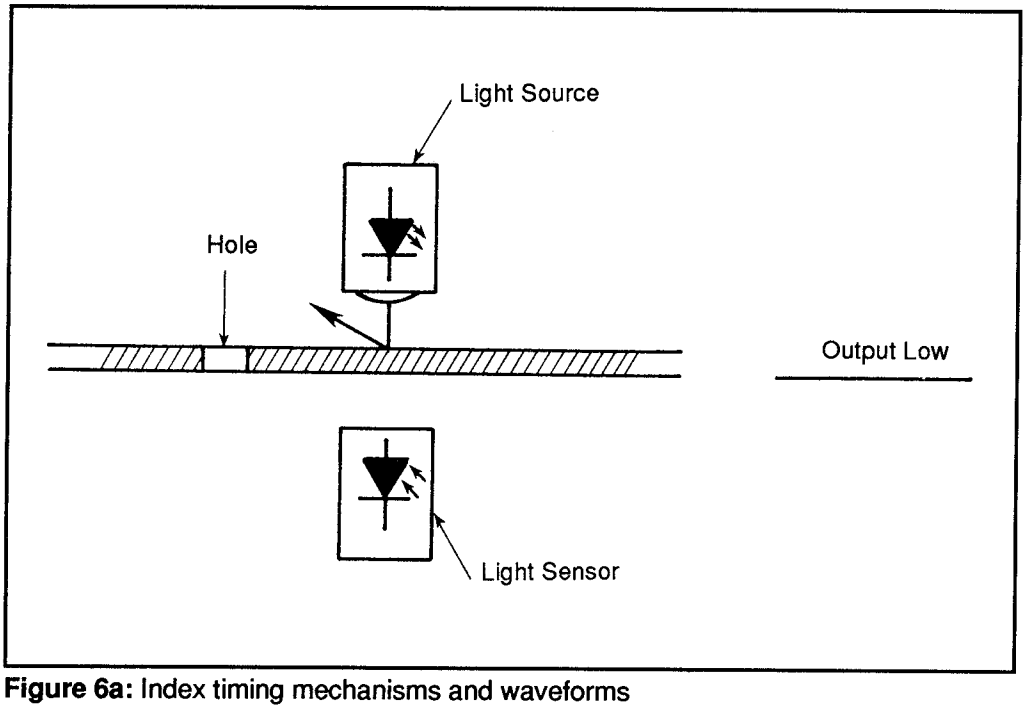

Figure 6a: Index timing mechanisms and waveforms

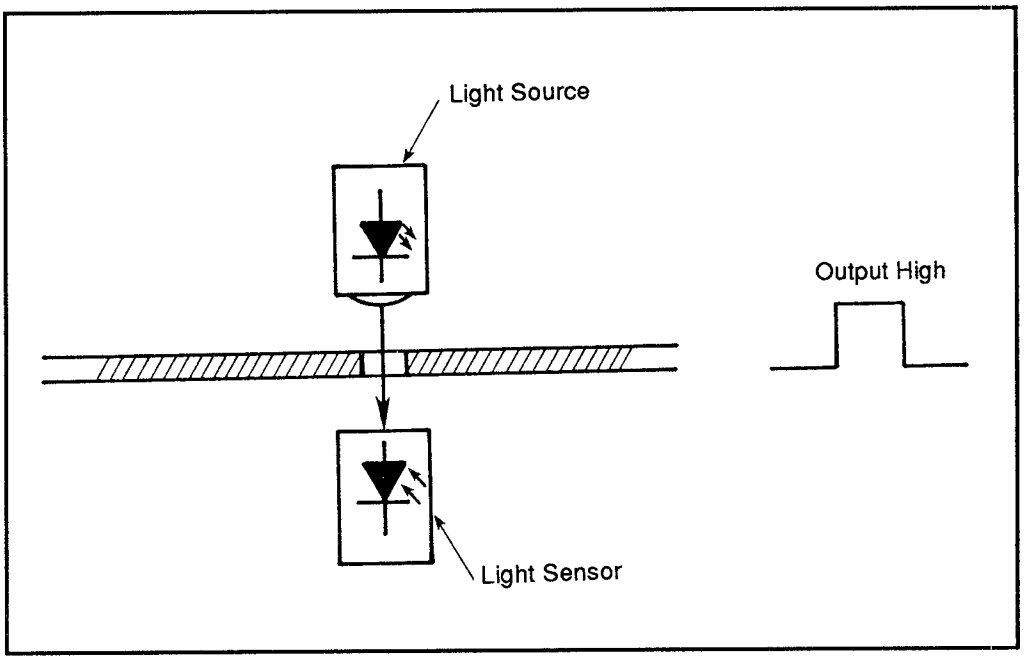

Figure 6b: Index timing mechanisms and waveforms

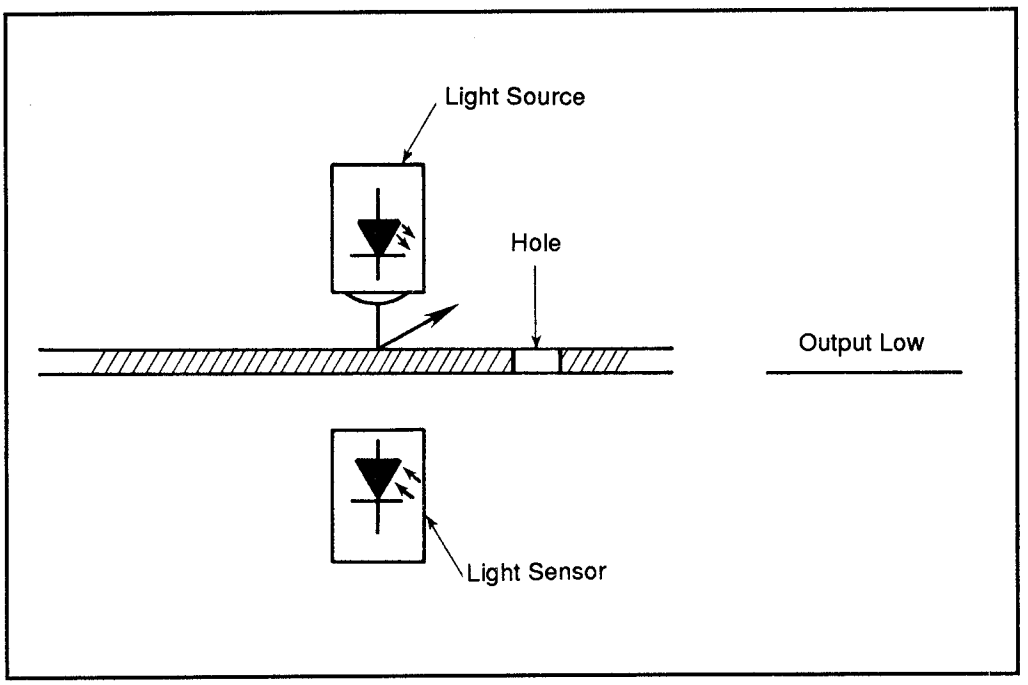

Figure 6c: Index timing mechanisms and waveforms

add channels A and B and invert the B channel. The scope is triggered by the drive as reference in the drive service manual. The channels are connected to the two head test points, with the probes properly grounded.

The exerciser program is loaded and the alignment disk inserted. The drive is instructed to read the track on the alignment disk that carries the test signal for this test. The scope trace should look like those in Figure 6.

The alignment can be made by moving either the light source or the photocell. Either one of these may be able to be moved, physically by loosening screws that attach them. One screw should be slightly loosened and the part moved until the waveform is correct.

Raw Data Checks

The raw data test (if available) will require the use of a "scratch" disk. This is a blank disk that can be written to and read from (or any disk you don't mind losing the data on). The scope is connected with the test for head radial alignment. The disk drive service manual will specify the correct scope settings.

The exerciser program is told to run the raw data test. The computer will write and read a pattern to the disk that will be displayed on the scope. The two waveforms should be very close. The manufacturer of the drive will specify the correct tolerances for the drive. If the waveform shows a blurred area larger than specs allow, there may be something physically wrong with the drive. Check for mechanical problems.

Azimuth Checks

When the disk head is positioned correctly, the center of the head should lie at an angle of 90° to a line drawn to the center of the disk. This alignment can be thrown off if the head has been moved sharply such as by dropping the disk.

The disk drive manual will specify the correct setup for the azimuth position. If the azimuth can't be adjusted to within tolerance, the head will have to be replaced. Often this means that the entire drive should be replaced, as the cost of a new drive is only slightly more than a head.

If the azimuth is off by more than a few minutes (a sub-division of a degree) one way or the other, the azimuth is incorrect. Signals that occur from the test may vary from one type of drive to the next.

Tests for Floppy Mechanics and Individual Circuits

Various sections of the drive could be at fault when a drive is not responding the way it should. These are discussed below.

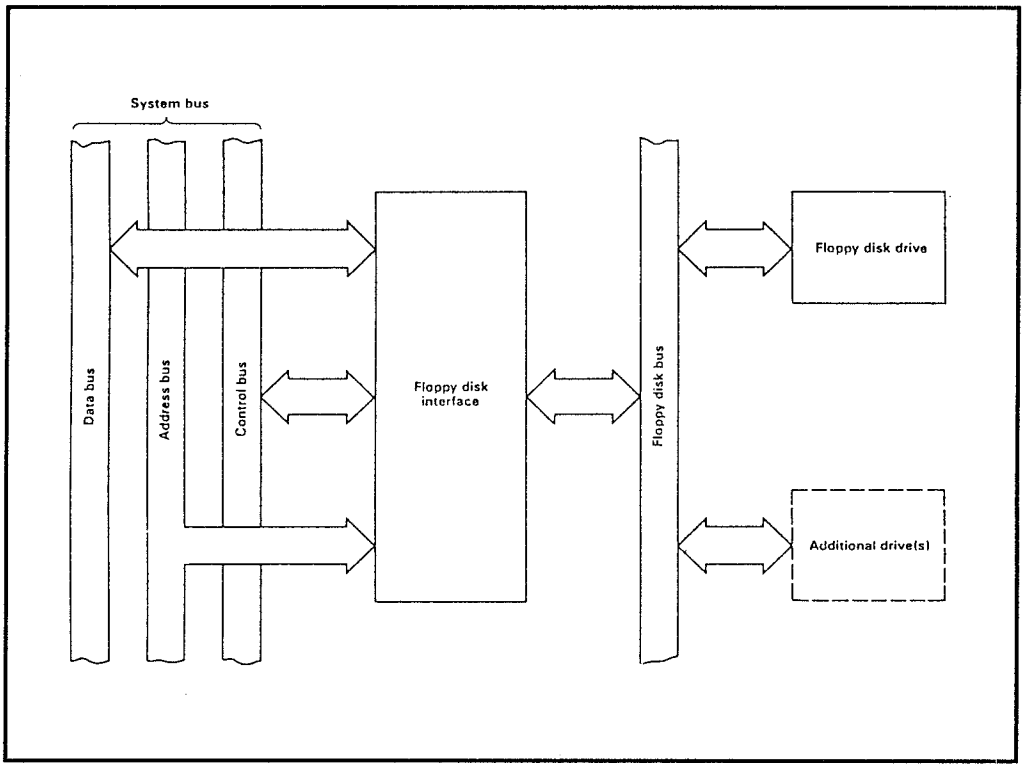

Figure 7: Floppy drive connector

Cables

All the connecting cables should be continuity checked using a DMM. The cables' status should be determined before tearing into the various areas of a floppy drive.

Drive Motor Spindle Test

The drive motor and spindle may be causing many of the alignment problems. The spindle should turn smoothly, with no catching or resistance. (With some drives, you may be able to manually rotate the spindle several turns when no power is applied.)

The bearings for drive motors are sealed and permanently lubricated. If there is a rough feel or grinding sound as the shaft is turned, the bearings have gone bad. If so, the motor should be replaced. (As with head replacement, the cost of a new motor is often nearly the same as a new drive).

The drive motor and spindle are fed a regulated voltage to maintain constant rotation. If the regulator becomes faulty, the motor will not spin at a constant speed. Check the voltage output of the regulator circuit.

Most drives use a tachometer device to detect the speed of the disk. In some drives there will be a tiny magnet mounted in the spindle. With each spin, the magnet passes a pickup which generates a pulse. These pulses keep the drive spinning at a constant speed.

Stepper Motor Test

It's rare for a stepper motor to fail. Testing it for proper function is a matter of checking the stepper logic.

The stepper logic and stepper motor cause the Read/Write head to move in and out on a disk. The stepper motor causes the head assembly to move in precise increments.

To check the stepper motor, start the exerciser program. The drive should be instructed to step in and out. If the Read/Write head does not move, check to see if there is an obstruction preventing the movement.

Next, check the lines that carry the signals from the control circuits in the computer to the stepper logic circuits in the drive. The direction signal specifies whether the head will step out or in (either a true or false logic signal). The stepper should be stepped in both directions with the software. With an oscilloscope you can view the signals being sent to the stepper motor's four lines. Each of these lines should show some activity.

If any of the lines are missing data, the discrete component feeding the bad line should be checked. This will be a transistor of some kind.

Write Protect Test

The write protection system is a simple switch which disables the write circuits. On a 5.25-inch disk, there is a notch which a physical arm or light sensor detects. If this notch is not present, or is covered, the disk is protected.

3.5-inch disks will use either a light sensor or contact switch. If the hole is covered (closed), the disk can be written to, and if uncovered (open) the disk is write protected.

It is possible for the write protect to become jammed and not allow any writing. This will almost always be caused by a faulty switch or light sensor. Check the alignment of the write protect switch, or light assembly in relation to a loaded disk. The two should line up. If they don't, the write protect assembly should be adjusted.

Read Circuit Test

To check the read circuits, start by visually examing the heads for score lines or scratch marks. If the heads show visible signs of wear, the best solution is to

replace the drive. As above, the replacement heads are nearly as expensive as a new drive. In this case, if the heads are badly worn, other parts are likely to be aging as well.

Bad heads will fail a "head output test". Set up the scope as in the head radial alignment adjustment. The exerciser program should be loaded and a scratch disk put in the drive. The program should be instructed to write a series of pulses onto the scratch disk and then read back. View the amplitude of the signal display on the scope. Place a 1/2 ounce (about the weight of a quarter) weight on the arm directly above the load pad or the upper head. View the scope trace. The amplitude of the output pattern should increase slightly. If the increase in amplitude is greater than about 10%, the drive should be replaced.

Write Circuits

Check the control signals of a typical write circuit. These may be the write gate, write data, and write protect signals. If the inputs are okay, look at the logic and driver circuits. There may be two of these circuits for each side of the head coil.

9/PC - TR
Troubleshooting and Repair

9/PC - TR - K
Keyboard

Keyboard errors may be difficult to detect. When a computer is turned on, the POST tries to locate and check the keyboard. If an error is found, a 3.xx code will be reported. (Check Section *"12/I-PC-PROP "* for the various code listings.)

Power

The pin arrangement is shown in Figure 1. To check the keyboard power, turn the computer off, disconnect the keyboard and the turn the computer on again. Check the voltages at the system board keyboard connector. If the measurements are different than listed, the motherboard may be defective.

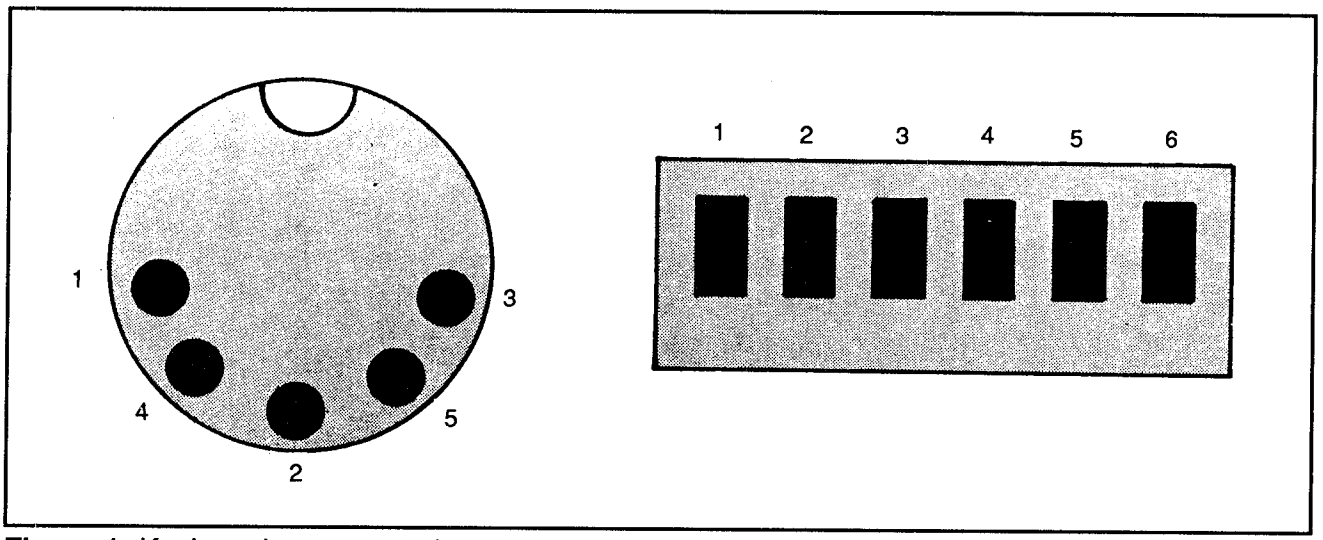

Figure 1: Keyboard connector pin arrangement

Cable

If the power ratings are correct, the keyboard or cable may be defective. Try a different keyboard to see if it works on the computer. Otherwise, replace the cable for the keyboard, or check each wire for proper connection at the din plug on the keyboard cable and inside the keyboard. (Use a DMM with continuity checking.)

Lubrication

In the event of one or two keys having problems, first clean the key(s). Lubrication of newer keyboards is not easily possible. The keys are mounted on rods that are surrounded by a spring-load with a foam center and a foil contact. Lubrication may damage the key striking arrangement.

Switching Mechanisms

Key mechanisms are often the most unreliable part of a computer system. Various mechanisms have been devised in an effort to improve the various problems related to the key mechanism. So far, each method of key striking seems to work just as well as another, and each will eventually wear out, or become dirty and require maintenance or replacing.

If you are working on a unit with mechanical contacts, and there is a build-up of dirt or corrosion on the contact points, this will probably be the cause of problems. Mechanical contacts can be cleaned with a TV-type contact cleaner.

If one key is causing problems due to dirt and corrosion, the chances are there are other keys causing problems too. Plan on cleaning all the keys, or replacing the keyboard.

Removing Keys

Keys from most keyboards cannot be removed from the top easily. Gentle prying with a screwdriver may be necessary to remove the keys so you can access the key mechanism for cleaning. A common trick is to bend the end of a paper clip into a hook to lift the key cap. Regardless, be sure to note the position of the keys before you remove them.

Oversized keys such as the the spacebar, shift keys, and the enter key will have a single mechanism and spring system to keep the key balanced on the key mechanism. Removal and replacement of these can be very frustrating, but with practice (and patience) can be accomplished.

Once the keys are removed, you can clean the internal contacts and lubricate them by spraying a small amount of cleaner/degreaser on the key shaft. Be careful with the type of keyboard. In the foam and foil model you may end up destroying the foam, making the key worse than it was. (Disassembly of one of the key mechanisms may be possible to determine the type of key mechanism in use.)

9/PC - TR
Troubleshooting and Repair

9/PC - TR - PS
Power Supply

Power Measurements

If power supply problems are suspected, you must make measurements while the supply is still in the computer, and hooked up. PC power supplies are "Switching" power supplies. There must be a load present, or the supply will shut itself down. There must be at least a motherboard and one disk drive hooked to the supply to test it. The pin voltages for the power supply connectors are shown in Figure 1.

The easiest method to assure that the power supply is at fault is to check the power at the leads connected to the devices. (For example, probe the test points where the power supply connector plugs into the disk drive.) If after this you still suspect a power problem, swap the power supply with another one that is equal or better. Power load testing may be pulled down from a faulty component on the mother board, expansion slots, or one of the peripherals.

If there is an internal problem with the power supply, your choices are to swap the supply for a new one, or attempt to repair the supply. Power supplies are relatively low-cost repairs to PCs which may warrant replacement rather than a costly, lengthy search.

Accessing the Power Supply

To access the internal components of a power supply, remove the supply from the case. The power supply will be held in most PCs by four screws at the back of the computer and two clips on the bottom. Disconnect all connectors, remove the four screws and slide the supply forward and lift out. You may have to remove disk cable connectors or even the disks to get the power supply to come out.

To open the supply after removal, you will need to remove several screws. This is dependent on the power supply. (Some are sealed and cannot be accessed.) After accessing the inside, you cannot test the power supply in the ON mode unless you apply the needed load (e.g., a motherboard and one drive). Standard

component checking can be done with a DMM, capacitor checkers, transistor checker, and resistance checker.

If the power supply is functioning normally, or is being pulled down by some other part of the computer, you will need to begin removing items that require power. Start with the drive units, as these will tend to fail first. (Always leave one drive connected to the power supply or the power supply will automatically shut down.)

Next, begin removing various expansion boards. Try to remove those boards not essential to power-up the computer first. The minimum required boards will be the motherboard and a video board. The video board can be removed if you are are only checking the power output of the supply.

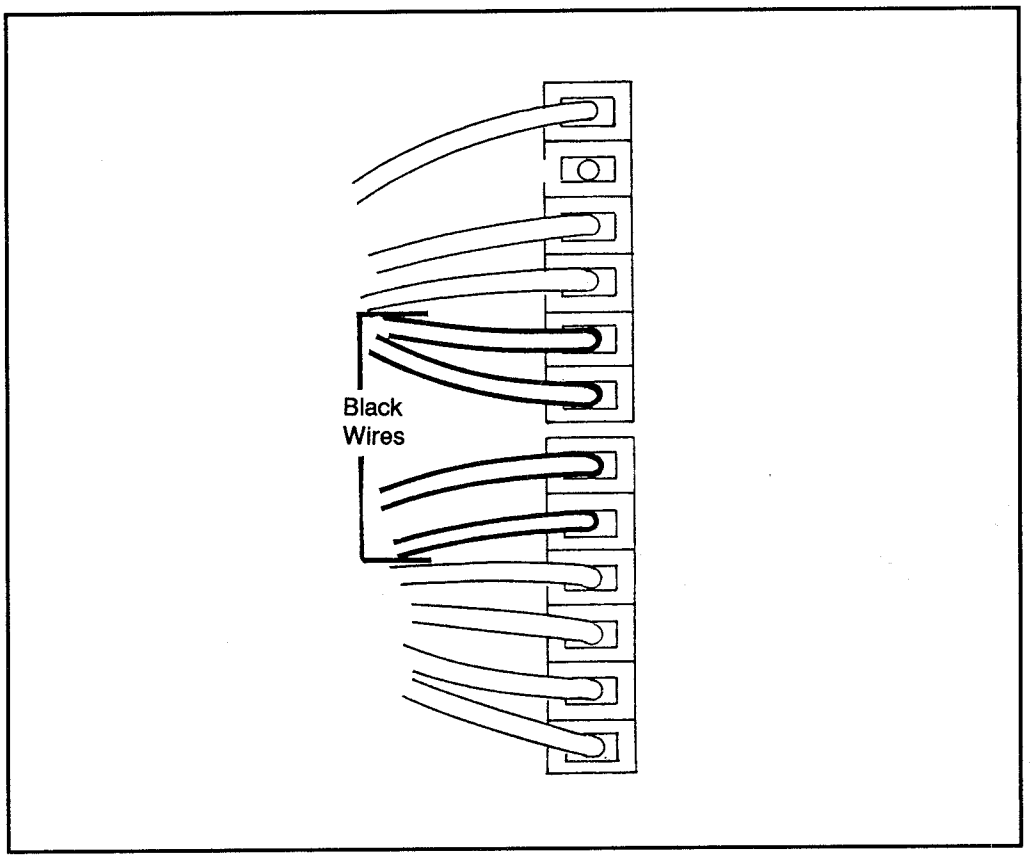

Figure 1: Power supply connectors

9/PC - VCS
Various Case Studies

9/PC - VCS - IBMPC
IBM PC

Perking Up a Dead PC

In this case study, a friend told us his IBM PC had conked out. We note that this is a friend because his computer is the original IBM PC. Normally, if you were advising a customer, you would say that this model is not worth repairing. In this case, however, we agreed to look at the system. The problem we found is one that can happen even on current models.

Repair Procedures

The first thing we did was to turn the computer on. Nothing happened, as was reported. We listened for beeps to give us some direction, but there were none. We popped off the cover of the system and turned it on again. This time we noticed that the fan in the power supply was running. This is a good sign because it indicates that the power supply is probably functioning.

Power Supply Problems

The absence of any beeps emanating from the speaker usually points to a problem with the power supply, which contradicted the fact that the supply's fan was operating. We checked that the PC's speaker was still connected, and it was.

We still suspected the power supply, so we inserted a PC diagnostic card into one of the empty expansion slots. These cards lose some of their usefulness when used with an IBM PC or XT, since these computers do not issue error codes, only beep codes. Normally, when you insert a diagnostic card into a system, you obtain a display of error codes on the LED readouts of the card.

All LEDs On

Many diagnostic cards tell you the condition of the power supply. You can do this yourself with a DMM, but inserting a diagnostic card into an expansion slot is much easier. After we inserted the card, we turned the unit on and looked at the power supply LEDs. All were lit, which indicated that the power supply was producing all of its voltages.

Check Video

At this point we were wondering why the system did not produce any beep codes to indicate the source of the problem. Since nothing was displayed on the monitor, we turned our attention to the video components. This particular system was using a monochrome monitor and Hercules compatible video card. These two items are not found in any new systems, but you will come across them every so often in older systems.

We did not have another monochrome monitor on hand to check whether or not the monitor was dead, but we did have a substitute Hercules compatible video card. We removed the old video card, and replaced it with the substitute card. When we powered up, we saw a flashing cursor on the screen and everything worked perfectly.

Checking Out the Video Card

Instead of reassembling the system and throwing out the defective video card, we decided to go a step further. We powered down the system, removed the substitute card, and replaced the original video card. When we powered up again, we saw the cursor come on and the system booted as if nothing had been wrong.

Dirt and Oxidation

Now we knew that we had discovered the real problem, one that can occur in any system. A resistance had built up between the gold "fingers" of the video card and the connector of the expansion slot, probably due to dirt and oxidation. By simply removing and reinserting the card, the resistance was broken.

Clean Contacts

We decided to give the gold "fingers" on the video card a good cleaning. Unfortunately, we had run out of contact cleaner and did not have an ink eraser handy. So we used a common pencil eraser to do the job. This solution works, but does not last as long as the other solutions. Other possibilities are to use a Dremel tool (low speed) with a soft wire brush attachment or fine emery paper. We finished up our cleaning job by blowing compressed air on the board's "fingers" and into the expansion slot.

Conclusion

This type of problem, although occurring on an old IBM PC, can happen to any system that has been on someone's desk for an extended period of time. The symptom described here — a dead PC — usually points to the power supply. But once the supply is eliminated as the source of the problem, the video system is the most likely culprit. — *Joseph Desposito*

The system has four expansion cards: controller, video, hard disk, and memory.

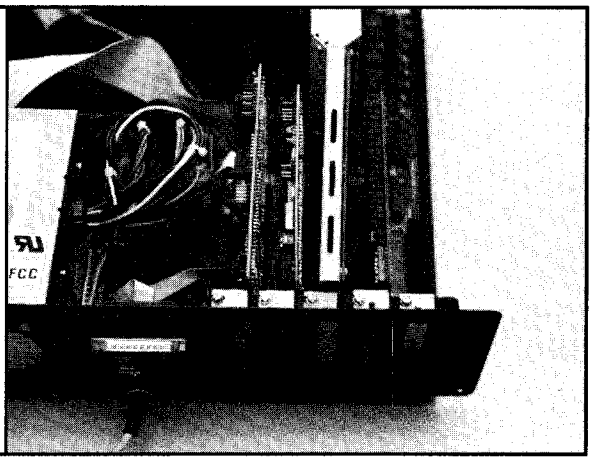

Installing a PC diagnostic card in an available slot.

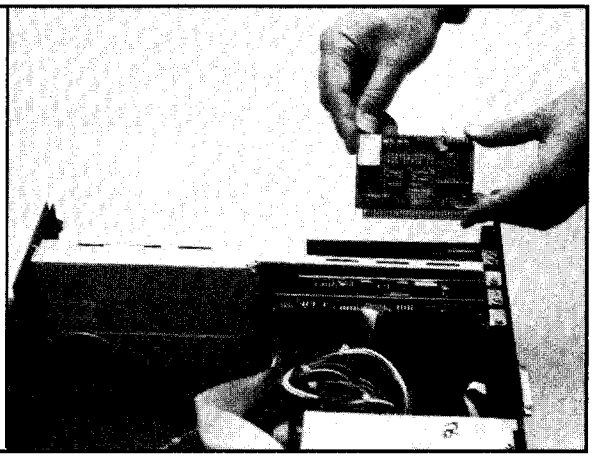

Removing the video card.

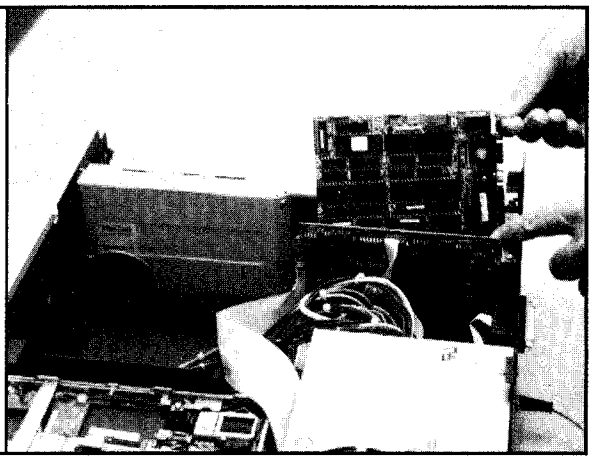

The system with the diagnostic card installed and the video card removed.

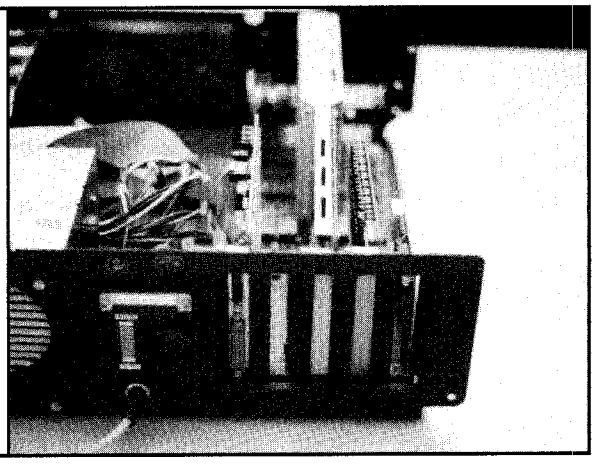

Installing a replacement video card.

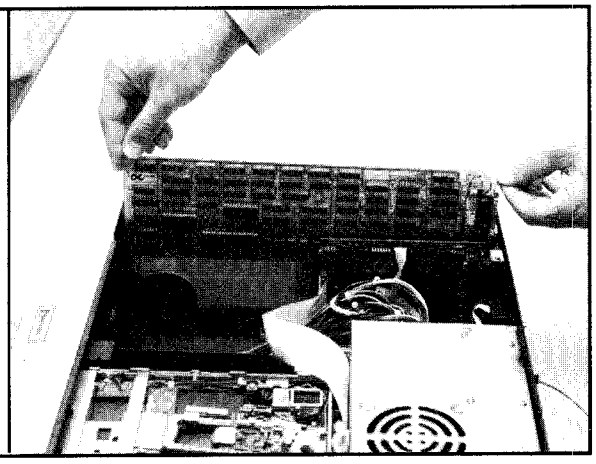

Cleaning the gold "fingers" of the original video card with a pencil eraser; an ink eraser is a better choice, but we did not have one on hand.

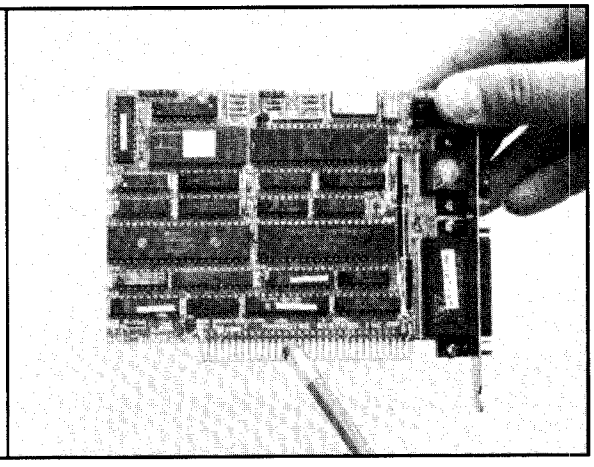

Problem: PC does not respond when power is turned on

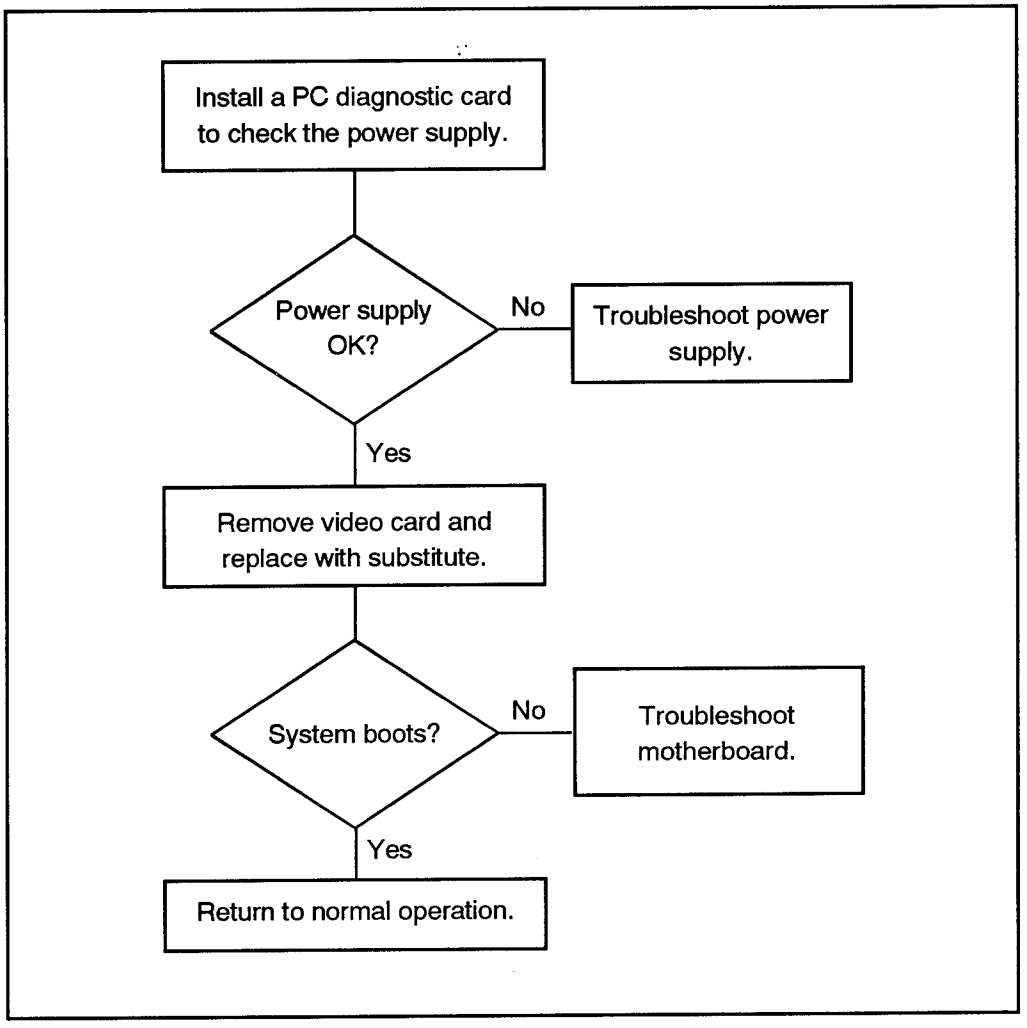

9/PC - VCS
Various Case Studies

9/PC - VCS - 286
286 Computer System

Introduction

A case study on the 286 computer represents the repair of most of the PC line. That is, with minor changes, the information presented here can be used to repair the 386 and 486 machines. This section deals with the IBM AT-286 machine.

Most PC lines at the AT level and above (286, 386 and 486) have built in CMOS diagnostic routines used to troubleshoot the computer. If the computer is up and running, but has faults, this software can help locate problems and aid in the repairing of them. If this diagnostic software is not enough, third party software is available. These third-party software programs will often go beyond the supplied diagnostic troubleshooting routines.

The Power On System Test (POST) covered in Section *"9/PC - TE"* general PC repair and maintenance section applies fully to the 286 machine. In fact, the POST applies to most IBM related PC clones as well as the official IBM PC line.

The System Board

The system board for the IBM 286 uses the Intel 80286 microprocessor. The system board layout is shown in Figure 1. The board has a 7-channel Direct Memory Access (DMA) capability with a 16 level interrupt line. Unlike the predecessor, XT and PC models, the board has a built in system clock and a real time clock. There are three programmable times on the board.

The board can hold either 256 Kb chips, or 1 Mb chips. There is also a CMOS complementary metal oxide semiconductor) memory RAM to hold the system configuration and diagnostic information from the onboard diagnostics. The CMOS memory is battery backed-up by either a fixed 3 V battery or a battery in a removable battery holder.

The board has 8 input/output (I/O) slots. From these 8 slots, six are designed for 16-bit technology (a 36 and 62 pin edge connector) and the remaining two for 8-bit cards (62 pin card edge sockets).

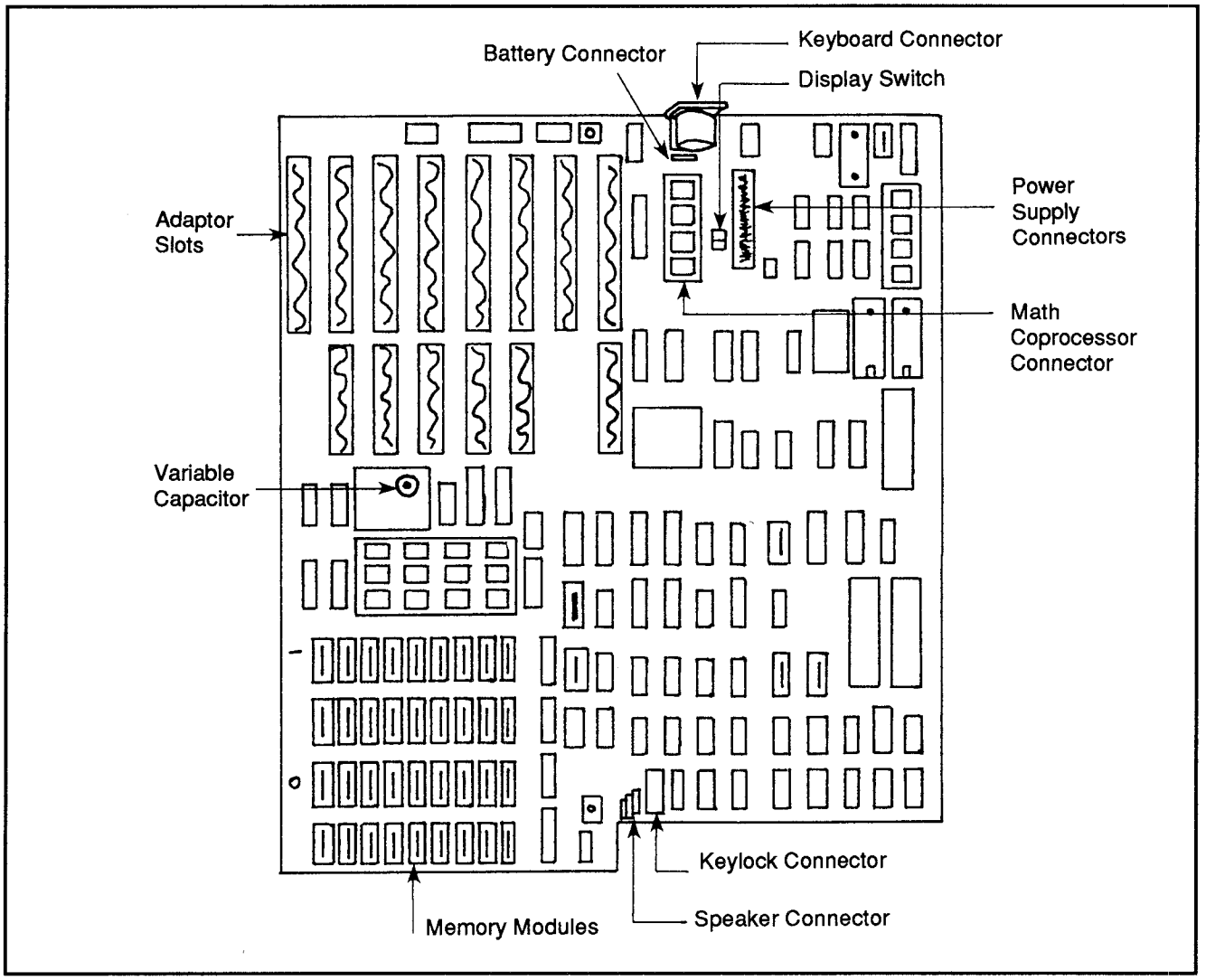

Figure 1: System board layout for IBM 286

Microprocessor

The 286 microprocessor has a 24-bit address line, and a 16-bit memory interface with an extensive instruction set, DMA and interrupt support capabilities, a fixed-point multiply and divide section, memory management section, a four-level memory protection, and a virtual address access range of 1 Gb of memory.

In the real address mode the physical memory is a contiguous array of up to one megabyte. This allows complete backwards compatibility with the 8086 processor and most DOS-related software.

In the protected mode, the processor can offer extended physical and virtual memory address space, memory protection mechanisms and some new operations to allow support for the operating systems and virtual memory. This protected mode allows access of up to 1 Gb of the virtual address space per task mapped into a 16 MB physical address space.

Troubleshooting and Repairing the 286

Tip ☞

In all steps that follow, keep in mind that you should never make or break any connection while power is flowing. This is especially important when it comes to the plug-in circuit boards. If one must be removed or replaced for testing, completely shut down power.

All basic troubleshooting for the IBM 286 (or for any of the PC series) begins with turning the unit on and running the diagnostic routines. The computer is a marvelous tool for self diagnostics and troubleshooting. If you cannot get this far, it is due to either a power problem or a serious component problem. In such cases, the POST commands can still be your guide. If you cannot get the unit to start, you will need to fix or swap the power supply.

Power Supply

The IBM PC power supply can be operated at either 60 Hz or 50 Hz and can be operated at either 120 VAC at 5 A, or 240 VAC at 2.5 A. The voltage is selected by a switch that is located above the power cord connector at the rear of the AT.

The output from the power supply provides +12, -12, +5, and -5 VDC. If output becomes overloaded (for example, shorting any of the many power leads on the system board), the power supply will switch off within 20 ms. This will protect the power supply from an overload condition and perhaps many of the components of the computer as well.

The power supply requires a dummy load to be connected to P10 when a hard drive is not present. The dummy load is a 5 ohm, 50 watt resistor.

If there is no load present on any of the connectors, the power supply will not be damaged. In this case, the power supply will simply not switch on. There must be a minimum load (the system board) for the power supply to switch on.

When the power supply is switched off for at least one second (preferably 5-10 seconds) and then switched on again, a power good signal is generated. This occurs only when there are no problems in the power supply or connected items.

The connectors used in the IBM PC power supply are listed below:

Load Point	Voltage (VDC)	Maximum Current (A)
PS8-1	Power good	N/A
PS8-2	+ 5	3.8
PS8-3	+ 12	0.7
PS8-4	– 12	0.3
PS8-5	Ground	0
PS8-6	Ground	0
PS9-1	Ground	0
PS9-2	Ground	0
PS9-3	– 5	0.3
PS9-4	+ 5	3.8
PS9-5	+ 5	3.8
PS9-6	+ 5	3.8
P10-1	+ 12	2.8
P10-2	Ground	0
P10-3	Ground	0
P10-4	+ 5	1.8

Note: P11, P12 and P13 are the same as P10.

If the power supply does not start, set the system unit power switch to off. Remove the cover for the 286 and set it aside. Use the DMM with the voltage range set to measure 20 VDC and less. Connect the black probe (common) to pin 5 of P8 and the red probe to pin 1 of P8.

Turn the power supply on. There should be a reading between 2.4 and 5.2 VDC. If there is, continue to check the rest of the connectors.

Figure 2 shows the arrangement of P8 and P9 on the system board and Figure 3 shows what one of the other remaining connectors appears as.

The following shows the voltages that should be found for the connectors.

System Board Connectors

Min VDC	Max VDC	+Lead	-Lead
+4.8	+5.2	J9-4	J8-5
+4.5	+5.4	J9-3	J8-6
+11.5	+12.6	J9-1	J8-3
+10.8	+12.9	J8-4	J9-2

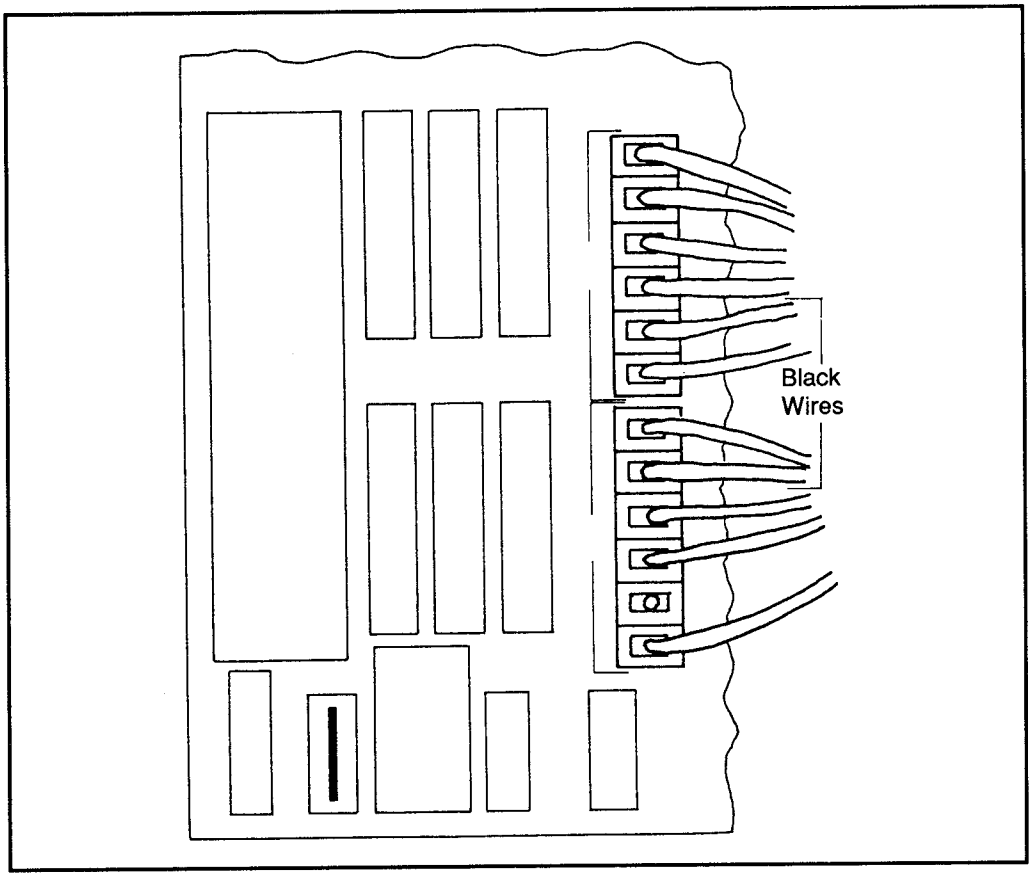

Figure 2: System board connectors P8 and P9

Other Connectors

Min VDC	Max VDC	+Lead	-Lead
+4.8	+5.2	2	4
+11.5	+12.6	3	1

If the system board power supplies are not at the correct voltage, replace the power supply. If any of the other connector voltages are incorrect, the power supply should be replaced.

If the power problem still remains, disconnect all drives and try turning the unit on again. Remember to use a dummy load on one of the connectors when removing the connector from the hard drive. If the power problems have been corrected, one of the drives is causing the voltage to be pulled down and should be replaced. To locate the faulty drive, reconnect each drive independently and try the power again.

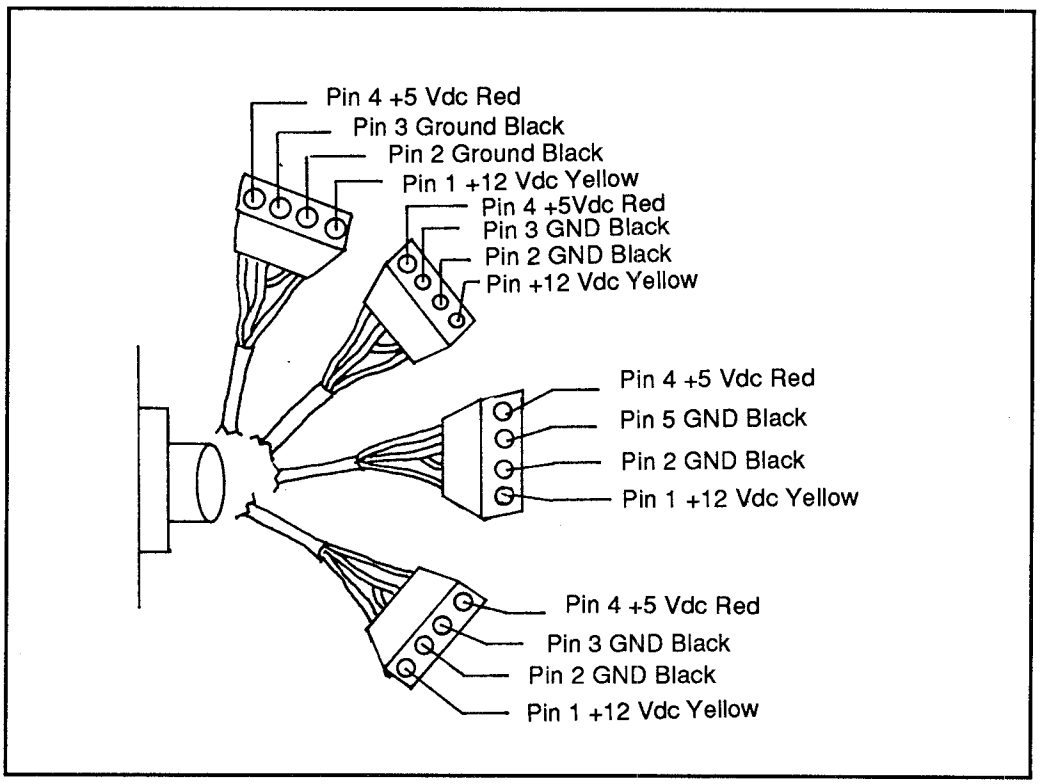

Figure 3: Other power supply connectors

Another power problem may occur from a failing math coprocessor (if one is present). Turn the power off and remove the coprocessor from the system board. The use of an IC puller is best for this, but a small flat head screwdriver can be used to gently pry on each end to loosen the chip from its socket. If the power problem was corrected, replace the chip.

The next step requires removing the primary display adapter from the system board. Locate the video board and remove it. This will cause the system to go into the POST. Turn the system on and listen for one long and two short beeps. If they occur, replace the video adapter. If this does not correct the problem, replace the system board.

Before replacing the system board, be sure that the problem does not stem from any other boards in the expansion slots. Remove all but the necessary boards from the slots (everything but the video board). If the problem is fixed, turn the power off and add one board. Then turn the power on. If the problem returns you have located the bad board. Replace the bad board. Do this for each of the other boards in the system.

System Board Checking

There are a variety of tests that POST will use to help spot and indicate a problem with the system board (assuming you can get that far). The screen will display a 1xx error message.

If you receive a 1xx message, replace the system board. The following refer to some of the Error codes that may be received.

If you received a 101 code, there may be a failing math coprocessor. Remove this chip and try again.

Error Code	Cause of Problem	Error Code	Cause of Problem
101	Interrupt failure	110	Replace system board
102	Replace system board	121	Replace system board
103	Replace system board	151	Battery defective or new battery installed
104	Replace system board	152	Replace system board
105	System unit failure	161	Battery defective or new battery installed
106	Replace system board	162	System options error. Run Setup
107	Replace system board	163	Date and time not set. Run Setup
108	Replace system board	164	Memory size error. Run Setup
109	Replace system board	199	Option setup error. Run Setup

System Board Replacement Codes

If you received a 102 to 109, 121 or 152 code, replace the system board. There is a problem that will be more difficult to fix rather than replace the board. Disconnect P8 and P9. Also disconnect any JP leads that may be found which lead to various controls like the key lock, speaker, turbo switch, power LED, etc.

To pull the system board, remove all cards in the expansion slots, drives located over the system board and all screws or nuts attached. On some boards there may be a single screw or nut located at the back near the power supply on the system board that will need to be removed, then the system board can be slid to one side and lifted out. Retain any standoffs on the system board to put on the new system board.

The system board could be checked for any broken leads or burnt components that could be replaced. This may save several hundred dollars in a board replacement.

Code 151 or 161

A battery that has gone bad, or has been replaced will cause an error message to occur. The system cannot operate because the default parameters running the system were stored in CMOS memory and are now lost. They will have to be

replaced each time the system is started, or a new battery is installed and the settings reset.

If the battery is able to be disconnected from a battery connector, do so. Check the voltage of the battery. The reading should be a minimum of 6 VDC for a 6 V battery and 3 VDC for a 3 V battery. Refer to the battery used in the system for the correct storage capacity.

Math Coprocessor

If the math coprocessor is failing, an error code of 7xx will be returned. In most cases, the math coprocessor will come with a diagnostic disk to check the functioning of the chip. If not, use the built in diagnostic for coprocessor checking. If the test reports a coprocessor problem, or a 701 code is reported, replace the chip.

Memory Problems

When the computer is started, POST will do a memory count to check that all memory chips are working properly. This test is a simple parity test to detect the presence of the chip and is not an extensive diagnostic test. You will need to run a memory check program that completely checks memory suspected of having problems.

If there is a memory size error, it can be easily corrected by running the setup program. This will reset the CMOS value stored. When a memory error message is displayed, the system will attempt to tell you the location of the bad IC. This will be a ten digit code. The first two characters tell the location of the error.

The first two characters indicate the bank in which the bad IC is located. Codes beginning from 00 to 07 indicate that the problem is on the system board (00, 01, 02 or 03 being Bank 0; 04, 05, 06 or 07 baing Bank 1). The last four characters sindicate the specific module that is failing. For example, if the error code is 020002 8000, the IC is located in Bank 0, the 15 position. The 8000 refers to the 15 location. The different codes for the last four digits follow:

Last Four Digits

0000 = P	0020 = 5	0800 = 11
0001 = 0	0040 = 6	1000 = 12
0002 = 1	0080 = 7	2000 = 13
0004 = 2	0100 = 8	4000 = 14
0008 = 3	0200 = 9	8000 = 15
0010 = 4	0400 = 10	

Keyboard

If during the POST you have received a 3xx error code, there is a problem with the keyboard. Any obvious broken parts on the keyboard should be corrected.

Keyboard errors can occur when the operator has pressed a key before the computer "looks" at it, or if a key is stuck. Most often this key press occurs when the operator tries to get the system into the diagnostic routines before DOS has been started.

The diagnostic software will allow you to test each key of the keyboard and will display a representation of the keyboard on the screen. If any of the keys do not work properly, try to clean the key if possible. If more than a few keys do not work, replace the keyboard.

Check the connector cable for the keyboard and see if all the wires are working properly. If the internal cable is good, and the problem still exists, replace the keyboard.

It is possible that a static charge has blown the keyboard IC. In this case, there will be improper key strokes seen on the screen. Static discharge can occur if you are cleaning the surface of the video screen with one hand and touching the keyboard with the other. A static charge will be transferred from one hand to the other and possibly damage the keyboard.

If the code received was a 302 error code, unlock the system unit key lock and continue. If the system key lock is unlocked, check it with a continuity checker. When the key lock is locked, there will be no continuity.

If the code received was a 303 or 304, replace the system board.

Display Adaptor

If at anytime when you start the computer you get an audible signal of one long and two short beeps, it will indicate there is a problem with the video display card. Remove and substitute the card with another to see if the problem is corrected. If not, check to see if the system board switch setting or the setup CMOS is wrong. If all are correct, the system board will need to be replaced.

Diskette Error

Most disk errors occur because the CMOS setup is set for the wrong type disk drive match. For instance, if the CMOS is told that floppy disk drive 1 is a 360K floppy drive and you have a 1.44 Mb drive connected, you will be unable to read any of your disks.

POST codes received will be of the 6xx variety error code. The LED of the floppy (or both floppies, one followed by the other) will be lit before a beep occurs and the system starts.

The LED for drive 1 will come on and time out if no disk is present and proceed

to a hard drive (if present) to load DOS. If no system disk is present, the appropriate status error will be displayed.

If the drive does not light, then there may be a power problem to the drive. Turn the power off and open the case. Check the voltages at the drive A circuit board. The voltages should be between 2.0 and 5.5 VDC. The pins to check are 12, 16, 18, 20, 22, 24, and 32. If they are not at the specified voltage, replace the drive. Check for voltage readings on the disk cable with the cable removed from the disk. Pins 8, 26, 28, 30 and 34 should have voltages between 2.0 and 5.5. If not, remove the cable and check for continuity. If all the lines are OK, replace the drive.

Serial/Parallel Adaptor Ports

If a 9xx code has been received, it means that either the serial or parallel port is having a problem. Run the diagnostic routine and check each of the ports. The use of a null modem connector or serial device may be needed to check the serial port. The parallel port will usually be checked through the use of a printer (the serial port may be hooked to a serial printer as well).

If errors continue to occur, check to see that the serial and parallel are set up correctly. If not, replace the serial and/or parallel boards.

Game Controller

The game controller will report back with an error message of 13xx. Run the diagnostic software and check the joystick for operation. If the test will not run properly, try a different joystick, or move the joystick to the other connector and try the test again. If the test continues to appear, and the joystick is known to be good, replace the game card or check the configuration.

Hard Disk

The hard disk error code that will be received upon start up will be in the 17xx range. Most often this will occur if the CMOS memory setting has lost the drive setting. Run the setup and check to see if the drive is still selected as being present, or correctly selected. If not, correct the situation. Refer to your drive type to match the selection from the drive menu listing.

Run the diagnostic routine and check the service of the drive. If the disk has in some way lost communication with the controller card and the system board, it will need to be reformatted. If the drive does not seem to start, check the power connections.

If a code of 1703, 1705 to 1709, 1711 to 1713 was returned, check the cables for continuity and replace the bad cable. If correct, the drive may need to be reformatted or replaced, especially if the error occurs after reformatting the drive.

9/PR
Printer

9/PR - A
An Introduction

Printers can be a wide variety of types. There are:

- dot-matrix printers
- laser printers
- ink jet printers
- laser jet printers
- bubble jet printers and several others

Dot Matrix Printers

A dot-matrix printer creates characters from a print-head that consists of one or two vertical sets of print-wire mechanisms. Vertical lines of dots are printed as the print-head moves across the page. As a general rule, lower quality printers use 9 pins and higher quality printers use 24 pins. However, there are times when a good 9 pin printer can outdo a bad 24 pin printer.

A 9 pin printer can strike the paper on 9 separate lines in one column at the same time. This may be enough dots to make up a portion of a single character that is less than 9 dots high.

The second column would create the second portion of the character and so on to the width of the character, which may be 5 columns wide. This could be a character that is 5 columns wide by 7 rows tall or 5x7 matrix printing. Figure 1 illustrates this function.

Some printers have what is called "near letter quality" (NLQ) which makes multiple passes over the same character and fills in the gaps between the dots printed on the first pass. The results give a character that is similar to a continuously drawn character as in Figure 2.

Each wire of a print head is driven by some kind of solenoid and return spring. The solenoid is activated and the wire is sent out to strike the paper. The smaller the wire, the smaller the dot printed and the higher the resolution capable for the printer.

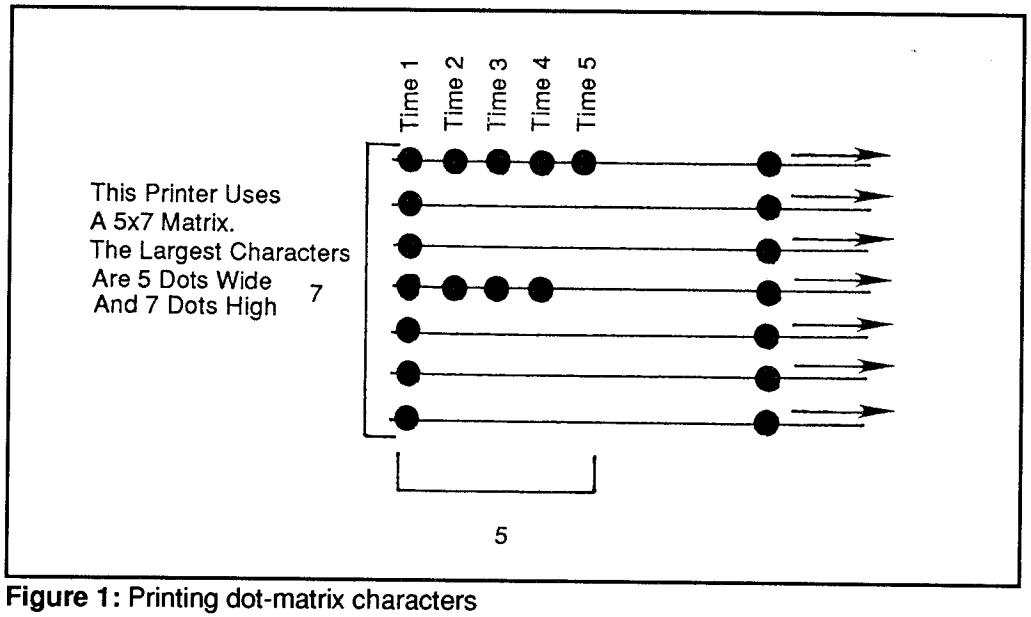

Figure 1: Printing dot-matrix characters

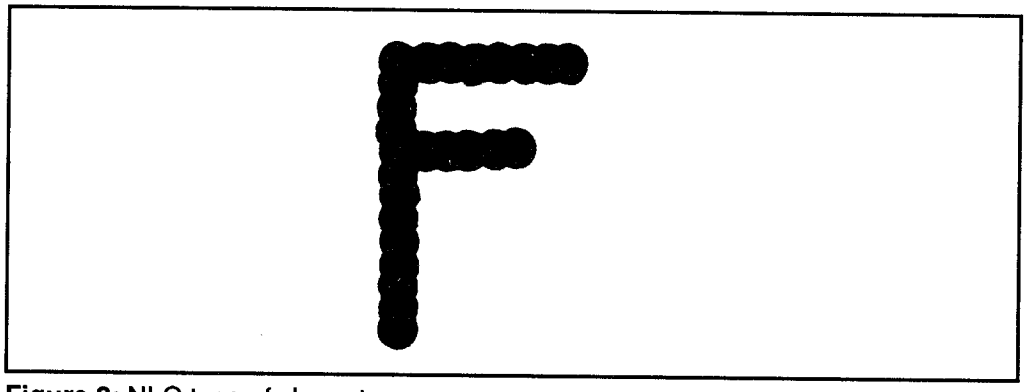

Figure 2: NLQ type of character

When damaged, print heads should be replaced as a whole. Most printers allow an easy removal and replacement of the print head.

These print heads can become gummed with ink and dust and require cleaning. The careful use of a denatured alcohol is often a good way to dissolve the residue on the print head wires.

Daisy Wheel

The "Daisy-wheel" is a printer that prints like a typewriter. Each letter is made on a separate petal of a wheel that is struck by a hammer. The letter then strikes a ribbon and prints a letter.

The wheel rotates to the letter desired and is then struck by a single solenoid driven hammer. On some printers, this hammer has a notch that mates with the back of the letter on the print wheel to insure that the letter does not slip from the hammer.

The wheel is turned by a stepper motor. The letters are rotated in precise steps and stopped in front of the hammer for striking. The wheel does not spin back to a home position before printing the next character, rather the printer remembers the position and advances to the next location, either by spinning the wheel clockwise or counter-clockwise.

Carriage Drive

The print-head is moved across the carraige by a toothed belt as shown in Figure 3. These belts are connected to a series of gears that are turned by a drive motor. This belt can be damaged from a printer head that jams, or if the print head is moved by hand while the printer is on. If the teeth are removed from the belt, the printer will skip when printing. Replace worn or loose toothed belts.

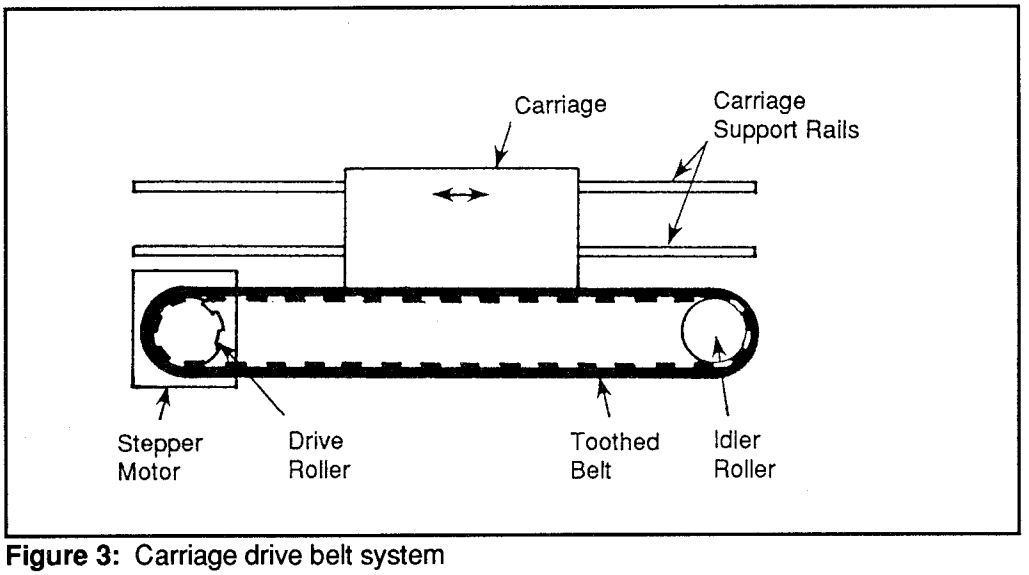

Figure 3: Carriage drive belt system

The print head rests on support rails that are lubricated to allow easy movement. Usually one of the two rails will be mounted off center so that the print head can be moved closer or farther away from the paper.

On other printers, the print head carriage may be pulled by a cable and stepper motor. If this cable becomes loose, the carriage may slip and not print evenly across a page.

The stepper motor is told to step in increments (some as small as 1/120 of an inch) to place the print head along the platen. When the printer is first turned on, or must return to the home position, a carriage stop sensor tells the stepper motor to stop.

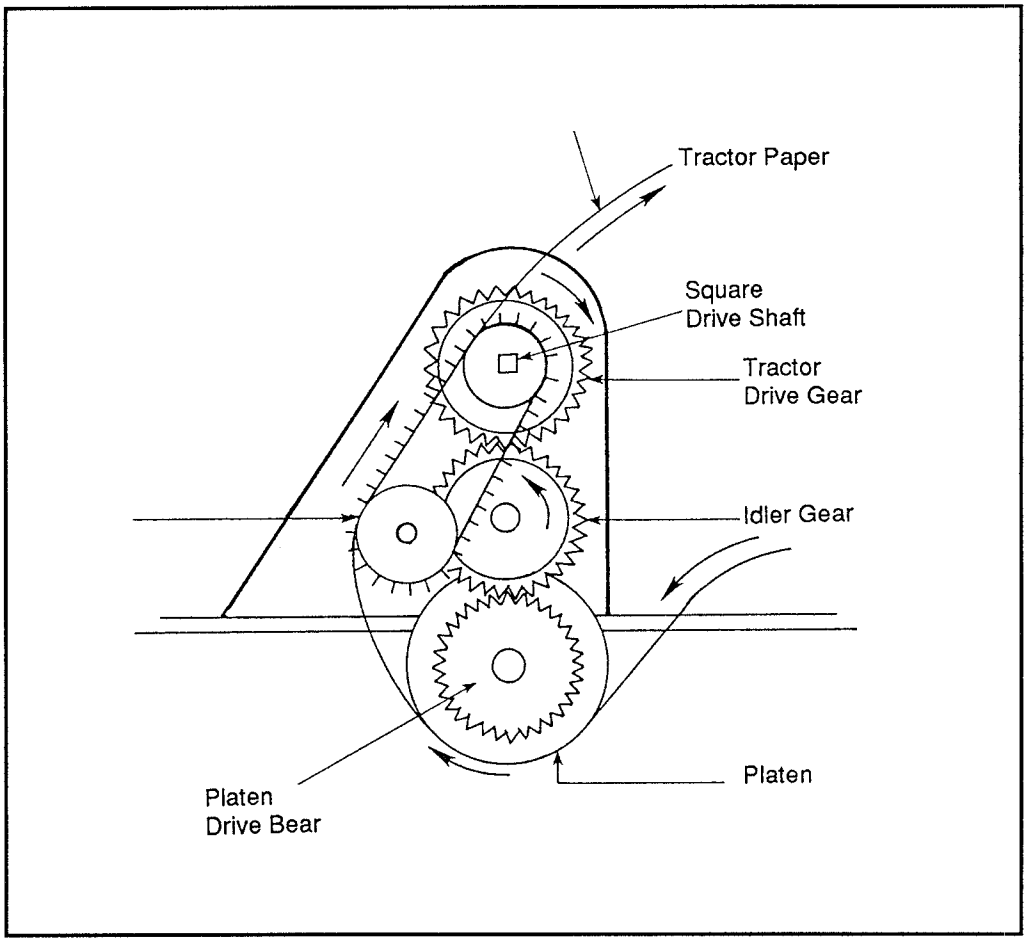

Figure 4: Tractor feed mechanism

Paper Feed Mechanisms

Figure 4 shows the print mechanism for a tractor feed printer. The tractor is turned by a series of gears. On the tractor assembly is a gear with pins that pull the paper, or push it, past the print head. Some printers employ a flexible gear with pins to pull the paper. These pins fit the extra edge of paper made for tractor feed. Some printers allow the removal of the tractors (or disabling) to accommodate friction feed.

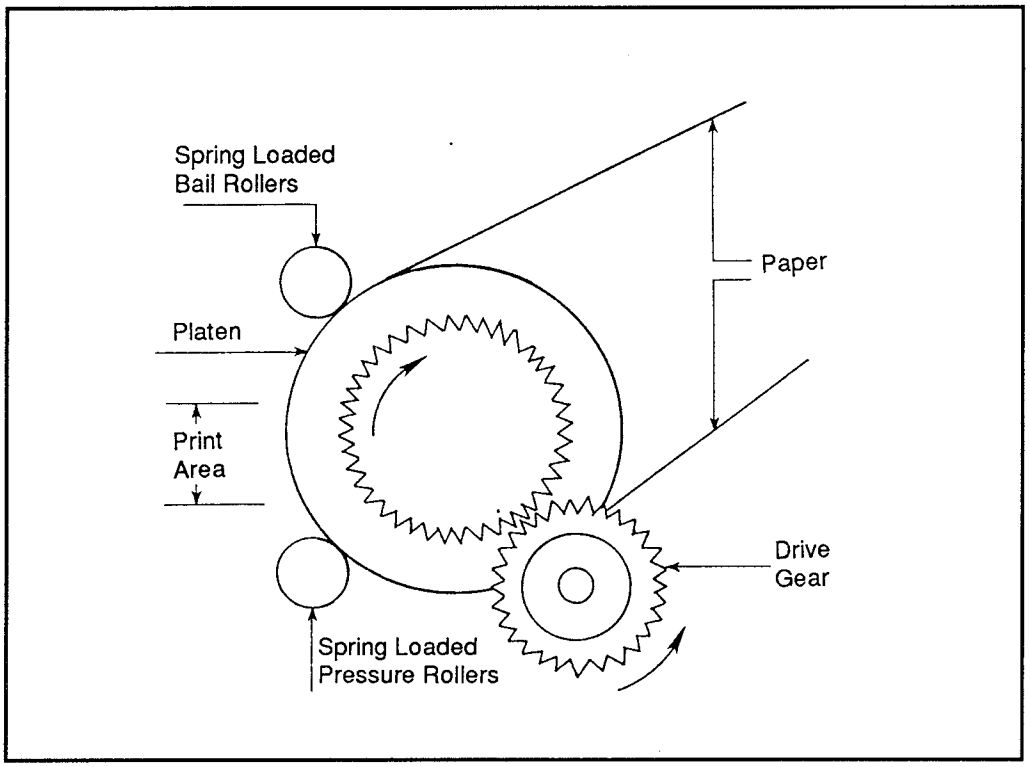

Figure 5: Friction feed mechanism

A friction feed printer has a platen and roller assembly designed to give a certain amount of friction to a piece of paper to push it past the print head. This allows for inserting single sheets of paper.

A stepper motor receives signals from the printer CPU that tells the motor to step to the next line. This drives the platen drive gear and tractor feeds (if present).

Printer Control Section

The control section of a printer is operated by a small CPU IC. The printer CPU uses an address bus to address the inputs, memories and outputs of the system.

Data goes from one part of the printer to another by means of a data bus. Figure 6 shows a block diagram of a printer's control circuits.

A set of ROMs contains the necessary instructions to control the printer CPU. These ROMs may also define a pattern of every character used for typing by the printer. When the code for a particular letter is received, the print looks up the code and knows how to reassemble the letter. Usually, the CPU of a printer will be 8 bit.

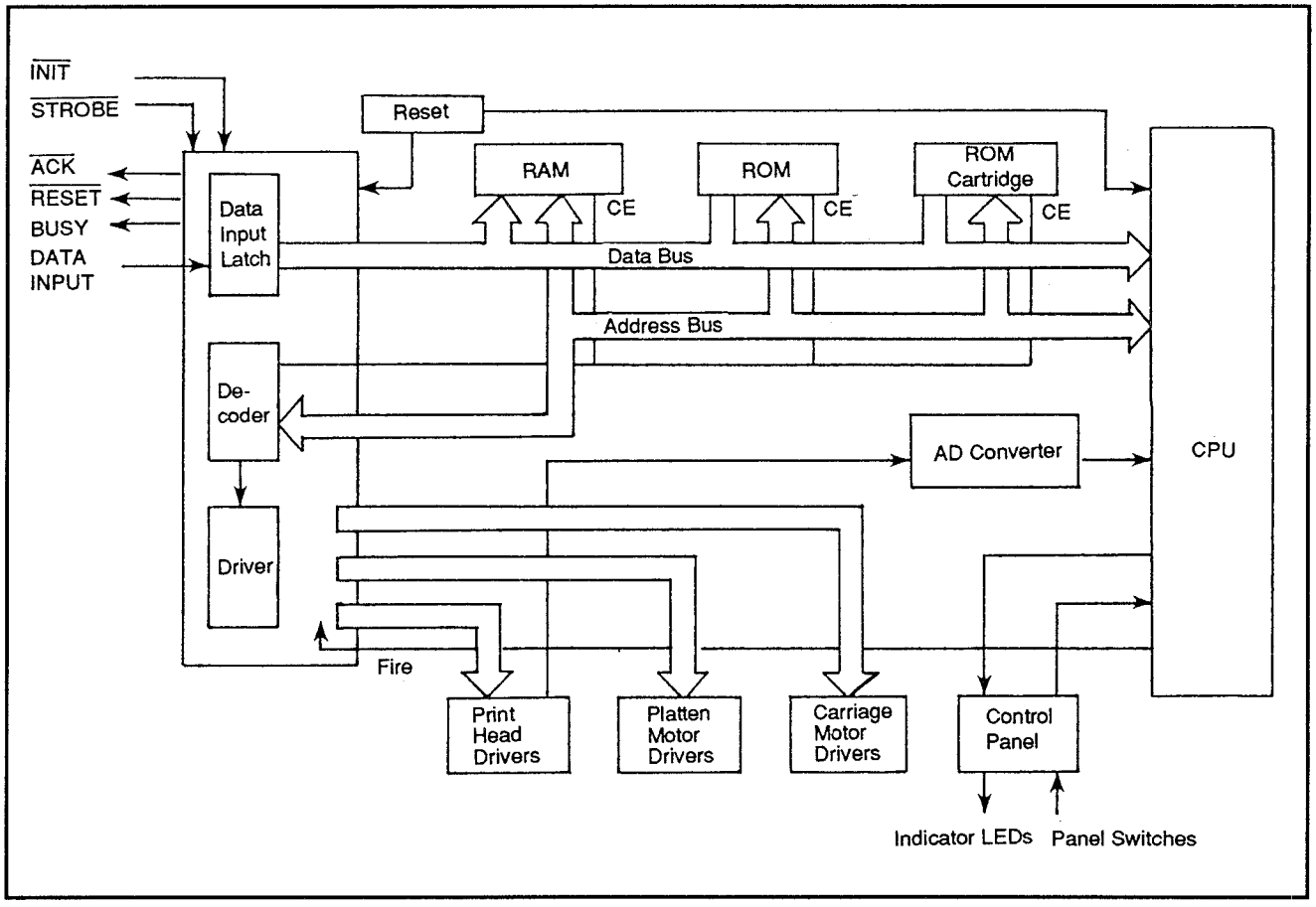

Figure 6: Block diagram of a printer's control circuits

Many of the newer printers will have as few as two ICs, with every operation the printer does handled by these two. This is highly efficient, but makes repair work difficult or impossible if you cannot get replacement chips.

On the other hand, if replacement parts are available, troubleshooting such a printer is simple. If the problem does not occur in the two main ICs, it will be found in one of the discrete components or in one of the ROM chips, RAM chips or various other sections.

Problems that are found on the one or two PC boards in the printer are most easily fixed by board swapping. This is the method that the printer manufacturers suggest, especially if one of their proprietary chips malfunctions. If the problem is a discrete component, tracing and fixing the part may be possible.

9/PR
Printer

9/PR - M
Maintenance

Printers become dirty over time and need periodic cleaning and maintenance. The printer should always be stored covered when not in use to avoid a build-up of dust in the mechanisms.

For periodic cleaning and maintenance (once or twice a year) the printer should be completely cleaned. Unplug the printer and remove the case. Blow (with a clean air source) any dust or paper fragments that may have collected in the casing or on the printer parts.

Pulleys/Gears

Inspect all the pulleys, gears and belts for signs of wear. Replace any partially stripped gears and pulleys.

Print Head

The print head mechanism should be cleaned with denatured alcohol (or some other suitable cleaner) and cotton swabs to remove any grime that has built up. Work carefully and slowly so as to not bend the wires or get cotton caught in the print wires. Do not get the cleaner on any of the rubber parts as this can cause them to break down and become brittle.

Platen

Clean the platen (with platen cleaner, not alcohol). The purpose is to remove any ink that may have become embedded in the platen. This is best done with the platen removed. If the platen cannot be removed, clean it by rotating while wiping with a soft cloth dampened with the cleaning fluid. (NOTE: Never turn parts of the printer while it is on. There will be a resistance factor that will strip gears making the printer skip in some fashion or causing other damage.)

Lubrication

The next step is to lubricate those parts that require it. Printer manufacturers will usually specify their choice of lubrication. Use only their recommendation or a certified substitute. The grease and oils must be viscous enough to do the job, but not migrate to areas where lubricants are not wanted (or cannot be tolerated). If all else fails and you cannot find manufacturer recommended products, off-the-shelf products can be used if you spend the time to compare the specifications.

The service manual will indicate the areas requiring grease and oil. These will include the platen drive gears, the platen bearings, pulleys, and rollers.

Grease will be used to lubricate the large mechanisms that handle power. Grease all gear teeth (not the paper pins), and mechanisms that slide or rotate against a cam.

Oil is used for mechanisms with smaller spaces between parts and for parts that move only a short distance. Oil should be used for bearings and bushings that carry rotating shafts.

Motors

Motors will most often be permanently sealed and cannot be lubricated. Those motors that can be lubricated (relatively rare) will probably have a felt wick for the oil. This wick will provide oil over a long period of time. If present, the wicks will most often be hidden under shielding, with the only way to get oil to them being to apply oil to the rod that holds the wick.

Print head wires, solenoids, and armatures should not be lubricated on dot matrix printers. These operate too fast to benefit and will often gum up from lubrication. Many good ribbons have lubricants built in and apply some when they come in contact with the moving parts.

The final check is to run a self test on the printer and see if everything prints. For most printers the self test is initiated by holding down the line feed key (or one of the others) when turning the unit on. The printer will then print continuous rows of characters sets set up in the test protocol.

9/PR - TR
Troubleshooting and Repair

9/PR - TR - LP
Laser Printers

Introduction

Laser printers work in a way very similar to copiers. The major difference is that a copier takes an original and makes a copy of it, whereas a laser printer takes information sent digitally to it from a computer and creates an image. This difference is in the front end. The copier uses light to scan the original—the laser printer has a data port. The rest (drum, cartridge(s), etc.) is almost the same. Most of the repair and cleaning procedures for copiers apply to the laser printer. See Section "11/C Copiers".

Many of the important operational parts of the laser printer are mounted in a single removable cartridge. This means that most laser printers require the drum and toner to be replaced at the same time (and you have no choice since both are in the same cartridge). Some, however, allow toner replacement. This is because the drum can last to make about three times as many copies as a single toner charge.

General Operation

Within a laser printer is a drum to which a dark toner powder is transferred by the developing roll. The toner image is pressed to the paper and then fused to the paper by hot fusing rollers. The photosensitive drum is turned several times per page to complete an image. Sections of the image (say 1/3 each) are transferred from the drum to the paper with each revolution.

As the drum rotates, it does several things. First, the drum picks up toner. Another part of the drum places the toner on the paper. A third section has the residue toner removed and discarded so the process can start again.

The drum is photosensitive. It has a light-sensitive layer of organic-photoconductive material on its surface. Therefore, by its nature the surface of the drum is very sensitive to light and should not be exposed to direct sunlight or even to room lights for long periods of time. If so exposed, the ability of the drum to hold an image and transfer it to paper may be degraded.

The inner part of the drum is made from an aluminum sheeting. This aluminum

tube is electrically grounded. As the drum is turned, it is exposed to light and becomes conductive. If the outside of the drum at that point is charged, and the drum is struck by a bright light, the charge on the drum will be drained off to ground.

At the start of a printing process the surface of the drum is charged with a uniform negative charge. This charge may be about -600 V. This "conditions" the drum.

A long narrow wire, called the primary corona wire, is mounted in a long enclosure. This wire is given a charge of as much as -6000 V. This voltage causes the air molecules around the wire to break down and become ionized. The air around the wire is no longer an insulator and is able to transfer charged particles (ions) to the drum. As the drum moves under this corona wire, ions from the corona transfer to the surface of the drum which is what gives the drum its uniform charge of -600 V.

To create an image on the drum to transfer to paper, the printer turns on a small laser diode. The beam from this diode is reflected by a series of mirrors and aimed onto the surface of the print drum. As the beam reaches the photosensitive material on the drum, the material becomes conductive. The negative charge of the -600 V is reduced to a charge of about -100 V. Each dot of the image to be created on the drum is made of tiny -100 V charges.

As the drum continues to turn with the new charges attached, they pass the toner section. The toner is a black plastic powder that has small particles of iron within. The iron particles can be attracted by magnets and can then be carried along. A fixed magnet is mounted inside the developing cylinder which attracts the toner powder. A blade levels off the toner so the surface of the developing cylinder carries a uniform layer of toner. The developing cylinder has a negative charge and the toner particles take on this negative charge. As the amount of charge is varied, the amount of toner picked up is varied and changes the density of the print.

Then the drum turns and comes in contact with the paper. Beneath the paper is a second corona wire which generates a positive charge. The positive charge is strong enough to attract the negatively charged toner dots off the drum and onto the paper.

At this point the toner dots are sitting loosely on the paper, being held there by the electrostatic charge only. A negative charge is created by the static charge eliminator which weakens the attractive force between the paper and the drum and allows the paper to be pulled away easily.

To make the image permanent, the toner dots are joined to the paper by fusing. The fusing section consists of two rollers with the upper roller containing a very hot lamp. As the paper passes through the fuser section, the heat from the lamp melts the plastic material in the toner, and presses the toner into the fibers of the paper.

Fusing occurs at about 180°F. When there is no paper present, the fusing elements rest at about 165°F. A feedback circuit adjusts the circuit's fusing temperature to keep it at a constant. A protective switch called a thermoprotector keeps the fusing rollers from overheating. If the rollers reach 210°F, the thermoprotector switch will open and cut off all power to the lamp. These fuser rollers are Teflon-coated so toner will not stick to them.

A cleaning pad clears any excess toner or dust from the rollers as they rotate. It also applies a thin coating of silicone oil which helps to keep toner from sticking to the roller.

The drum continues to turn and must be cleaned for the new information to be transferred to it. A rubber cleaning blade scrapes off any remaining toner which then drops to the bottom of a cartridge. A sweeper blade rotates and brushes away any toner that has accumulated in the cartridge. This excess toner is then passed to a discard bottle.

The drum continues to rotate and then passes under erase lamps. These lamps drop the charge on the whole surface of the drum to a uniform -100 V. The drum is now conditioned and ready to start the entire process over again.

Laser Diode

The job of the laser diode is to create an image across the entire width of the drum. Some laser printers may employ several laser diodes with each working a section of the drum.

The laser diode creates a beam of laser light which is then focused by a series of lenses. The beam is aimed at a rotating six-sided mirror. As the mirror turns, it causes the beam to sweep across the surface of the photosensitive drum. As the beam moves across the drum, the laser is switched on and off by a beam detect sensor. When the beam hits a point where the drum should have a dot, the laser is energized. If the drum should have a blank spot, the laser is turned off.

It should be noted at this point that the resolution of laser printers is rated in dots per inch (dpi). Most laser printers today are rated at 300 dpi, which means that they are capable of focusing the laser to create as many as 300 dots for each inch on the drum, which means that each dot is approximately 1/300th of an inch. As

with a computer monitor, the dots are often referred to as pixels. Many make the mistake of thinking that the laser printer creates a continuous image, which it does not. You can see the pixels with a magnifying glass, and sometimes with your eyes alone. You can expect to see resolution improve as technology improves.

Once a single pass has been made, the drum steps (or turns) to the next line and begins the process over again. Each side of the rotating mirror works on a single line across the drum. This continues until the image is complete, at which point it is printed.

Control Circuits

The control circuits of a laser printer are themselves a mini, slave computer. Information from the PC is sent to the printer's CPU which then must convert that information into a memory-stored representation of the image to be produced. Each storage unit (or dot representation) is held in a matrix configuration memory. This is then transferred to the drum surface by the scanning laser diode. The information received may be individual codes representing letters or actually dots to create a picture. The more information for a page, the more printer memory required to generate a complete image, and the longer it will take to print that page.

Many laser printers are shipped with the minimum of 512 K of memory. This is sufficient for printing a full page of text along with some minor graphics. A full page of graphics, or complicated graphics (a picture) may require a laser printer with 2 megabytes or more of memory, depending upon the complexity of the drawing.

To give you an idea of why so much memory is needed, think again about what the 300 dpi rating means. With 300 dots per inch, each square inch of the drum (and on the paper) can contain up to 90,000 dots (300 x 300). Now imagine a standard 8.5x11 sheet of paper, with a 1/2 margin all around. This means that the surface area will be 75 square inches. The total number of dots possible, then, is 6,750,000. Each of those dots must be represented in memory.

Possible Service Problems

Laser printers include many electromechanical parts. When they work, they are great, but if problems occur, it will usually be time to call in the service repair person. Specific service information is virtually always proprietary and manufacturers won't release it except to their own technicians. Much the same is true for replacement parts. Until this policy changes (unlikely), only the most basic repairs can be accomplished.

Paper Jams

Paper jams occur most frequently and are handled in the same fashion described in the copier section. The travel path will be slightly different. It will also be shorter and generally less complicated than in a copier. This makes it easier to clear paper jams.

If paper jams occur often, the cause could be as simple as poor quality paper, improperly stored paper, or a printer that needs a thorough cleaning. Also examine the rollers and other feed mechanisms.

With some laser printers, if the paper tray (and the paper in it) isn't exactly flush with the entrance to the paper path, the paper will enter at an angle and cause a jam. Although this isn't a common problem it is worth consideration.

Toner

Toners are the only chemical required in the laser printer system. With most laser printers, the toner is inside the drum cartridge, which makes proper storage even more important. Whether integral or separate, the toner chemical/cartridge is highly sensitive to improper storage. It must be kept in a cool, dark (or at least dim) and dry place.

Even with the best storage conditions, toner has a definite shelf-life. This is usually 2-3 years, but the shelf-life decreases dramatically if storage conditions are poor. Under certain circumstances the shelf-life could be 6 months or even less. Old toner shouldn't be trusted. It can cause a variety of problems — from poor print quality to gumming up the printer.

If there is a problem with the image quality, suspect first that the toner is bad. (Even a brand new cartridge may be bad. Even if your own storage practices are perfect, you have no control over the storage practices of the person or company who sold it to you.)

When replacing toners/cartridges, do as recommended both by the owner's manual for the printer and by the toner manufacturer. Replace all the parts recommended at the toner change time.

Drums

As above, the drums are light sensitive. For this reason they are put in light-free packaging. The replacement cartridge must be kept in this packaging until needed. Drums can be damaged by strong light. You don't need total dark when replacing the drum cartridge, but try to minimize both the quantity of light and the intensity of light that falls on the drum.

Smearing

Smearing and printing problems that occur will either be software based, or similar in fashion to those described in the copier section. The major

difference is that the drums in laser printers fail more often than those in a copier due to the organic material present.

Test Page

Most laser printers can be made to print some form of test page. If the test page is being printed properly, but the pages being sent from the computer are not, the problem is not in the printer. It will be found in the connection between the printer and the computer, or in the software.

Some Additional Safety Factors

The laser printer should not be operated with the cover open. Fortunately, this is impossible unless a safety switch has been over-ridden in some manner or has become nonfunctional.

There are several reasons for this design. As just discussed, light falling on the drum should be minimal. It should never fall on the drum while printing is being done.

Warning!

There are high voltages present when the laser printer is operating — as high as-6000 V. This is extremely dangerous. Also, the laser diode in the printer produces laser light and is invisible to the naked eye. When the unit is operating under normal circumstances (closed) the laser emission is safe. But if the case is open and somehow made to operate, the laser light could be present and cause some eye damage. Avoid even trying to look through paper slots to see into the printer when it is operating. The laser light may be shielded from being seen in this manner, but don't take the chance that it is. Damage to the retina of the eye from a laser beam can be instantaneous, and is usually permanent.

Table of Contents

Section 10
Home Appliances

Table of Contents

10/A *An Introduction*
10/A - BPS *Basic Power Sources*
10/A - W *Wiring in the Home*

10/TR *Troubleshooting and Repair*
10/TR - A *An Introduction*
10/TR - A/C•R *Air Conditioners, Refrigerators*
10/TR - A/C•R - A *An Introduction*
10/TR - A/C•R - EP *Electrical Problems*
10/TR - A/C•R - MP *Mechanical Problems*
10/TR - C *Controls*
10/TR - ECM *Electronically Controlled Motors*
10/TR - T *Transformers*
10/TR - Th *Thermostats*

Table of Contents

10/A
An Introduction

10/A - BPS
Basic Power Sources

The most basic power used in the home to power devices is the AC current supplied to the home. The power is delivered to the home via some kind of circuit breaker box, or for older homes a fuse box.

Maximum Current

A typical maximum current available in the circuit breaker boxes may be 100, 125, 150, 200 and 400 A service to the home. There is a main circuitbreaker (rated at full service box load), with sub-breakers for the various sections of the home. Each sub-section might be broken down to 15 or 20 A breakers for sections of the home's normal wall sockets with a 50 or 60 A breaker for the stove or range and a 50 A breaker for the AC/heating unit.

Homes of the past had electric loads much less than those used today. A 60 A service, using just two wires (one hot and one neutral) and delivering 120 V was fairly standard. Today such a home is "antiquated," and 100 A service is considered to be minimum.

Three-Wire System

Connection to the outside world for most homes is now done through a three-wire system. This system consists of two hot lines and one neutral. They deliver 120 V between each hot wire and the neutral, and 240 V between the two hot wires. This is a standard 120/240 V service.

Volts Rating

Systems are rated at 120 V, but more typically deliver supplies that vary from 115 to 125 V throughout the day, due to normal daily fluctuations in the utility's supply lines because of varying loads, daily switching procedures, and other activities in remote parts of the utility system. Each line referenced here will be called out as 120 volts for each hot wire to ground and 240 V for measuring between two hot wires. Bear in mind that these are nominal values.

Overhead Three-Wire System

The typical overhead three-wire service from a utility consists of two insulated wires twisted over a bare stranded wire and is known as a "triplex". Aluminum conductors are most often supplied, but copper conductors may be used when the house is located near salt water areas.

This type of system will be connected at the customer's end above or below the roof line depending on the height requirements set by local codes. The three utility wires will connect to the three service entrance wires at a "drop loop." This drop loop is done to keep water from getting inside the house wiring mast that houses the wires running to the meter and circuit breaker box. There are minimum clearances that must be met for proper placement of this wiring.

An underground electrical system may be used in some areas. Usually, this system of wiring will be found in newer home areas, or older areas converted for beautification. In this case the utility line will be buried up to the point where the breaker box and meter are located on the home.

The mains (the two hot wires and neutral wire) are fed into the box. The hot wires are fed through a double-pole double-throw circuit breaker and then connected to separate bus bars. The neutral line is fed to a third bus bar, is active at all times, and will be connected to ground.

10/A
An Introduction

10/A - W
Wiring in the Home

National Electric Code

The National Electric Code (NEC) designates what type of wire, connections and connectors can be used for power lines in the home. Each circuit within a home is known as a branch. There can be two or more outlet branch circuits in five ratings allowed in residential wiring. Those circuits handling 50 A circuits or more can be used but can only serve one outlet each. These high amperage circuits may be in air conditioning and heating systems.

Circuit Amperage

The amperage of a circuit is determined by the circuit breaker or fuse protecting the circuit. The breaker or fuse rating will be (usually) determined by the wiring size, which in turn is determined by how the outlet(s) will be used and the expected current draw.

Wire Rating

Circuit Rating in Amps	Copper Wire Size (AWG)
15	14
20	12
30	10
40	8
50	6

Number of Outlets

The NEC has no limitation upon the number of outlets that can be connected on a single branch circuit (although local building codes might). If there is a sufficient number of circuit branches provided, there will be no need for overloading any one circuit.

Electrical Load

The load on these branches should balance across each of the main bus supplies found in the circuit breaker box. If the loads are unbalanced, tripping of the breakers can occur.

In other words, if there are six branches, the draw on them should be more or less equal. The home should not have a condition in which 3 of the branches are used heavily and the other 3 not at all.

Building codes generally require that the home has an outlet for every 10 or 15 running feet of wall, and at least one outlet in every room. Good building practice (and sometimes by local building code) will never have all the lights and outlets in one room connected to the same breaker. Instead, the ceiling light in the room will probably be on a completely different circuit. You may even find that the outlets in the same room are on different branch circuits. This practice not only helps to balance the load, it helps to ensure that if one circuit has a problem, there will still be some power available in a given spot.

The caution in this case is that when you flip the breaker and kill a particular outlet, do not assume that all other outlets in that area are likewise killed.

15 A and 20 A Branches

A 15 A branch circuit is used for ordinary lighting and general-use receptacle outlets. A 15 A circuit breaker or fuse is used to protect the No. 14 wire used in these types of circuits. Only 15 A rated receptacles can be attached to them. Any type socket for lighting load may be connected to the receptacle, but must be at a maximum load of 12 A, or 1440 W. If the circuit feeds lighting outlets or small appliances are used on this type of circuit, the total load of the fixed appliances must not exceed 7 1/2 A or 900 W.

The NEC requires that two 20 A branch circuits be provided for all small appliance loads including refrigeration equipment that may be used in the kitchen, pantry, etc. No lighting outlets may be connected to them except for possibly a clock hanger-type outlet, or an outdoor receptacle. Both of these type of circuits must run to the kitchen so that some of the receptacles in the kitchen will be connected to them and may be found in other rooms as well.

Tip ☞

Although many people fail to do so, or cannot do so, it is best to have major kitchen appliances, including the microwave oven, on dedicated branch circuits.

The 20 A circuit must also be provided for the laundry area where it may supply one or more receptacle outlets. If a 20 A circuit is provided, receptacles of either 15 or 20 A ratings may be provided. Plugs that fit 20 A receptacles will not fit into 15 A receptacles, but 15 A receptacles can fit in 20 A receptacles.

The various type of outlets that you may find connected to the appliance you are to be working on is shown in Figure 1. These devices should always be removed from the receptacle when servicing.

Receptacles

The NEC also requires that one receptacle in any counter space wider than 12" be provided. These receptacles are best placed staggered from one circuit to another to prevent overloading. Spaces that are separated by refrigerators, sinks, and range tops are regarded as separate spaces.

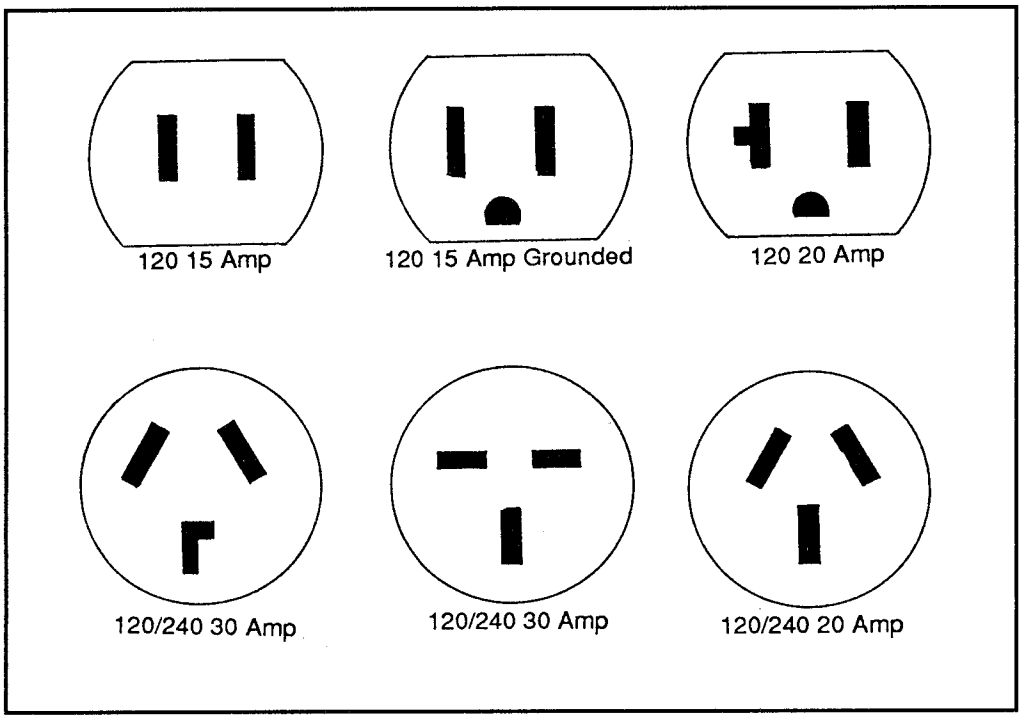

Figure 1: Receptacle types

Larger Amp Branch Circuits

Larger ampere branched circuits (30, 40 and 50A) are not allowed in dwellings to supply lighting outlets. They are to be used for ranges, clothes dryers, or other such similar appliances. There is rarely more than one outlet in use that supplies this kind of current.

Wiring Used

The only wiring that is acceptable to be used is that wiring that has been UL stamped. Any properly sized UL wiring will be acceptable for use by the NEC. Local wiring codes may vary and should be checked before changing or adding wiring.

Each individual wire consists of a single conductor that is either sheathed or bare, solid or stranded. All wire has resistance that limits the flow of current and causes the voltage applied to the current to drop off as the current flows along the wire. The wire size must be selected so that the voltage drop is not too excessive to operate the circuit in which it is applied for a specific load.

Wire used in homes is most often copper, but some areas may still use aluminum and copper clad wiring. The latter are being phased out for two reasons. Aluminum and copper clad wiring are not as efficient conductors as copper and

will usually need to be larger to handle the same load requirements. Worse is that aluminum has a greater tendency to oxidize, and when this happens the connection may become loose, and could even begin to arc. If this happens, not only may electrical service be disrupted, but there is a greatly increased chance of fire.

The NEC defines a cable as more than one conductor in an overall insulated wrapping. Wires in a cable are shielded from one another by an insulating material (dialectic) which is a material that does not conduct current. The most common type used is made from thermoplastic materials and is generally color coded similar to the standards established.

As current flows through a wire, heat is generated and this heat varies as the square of the current. The heat poses a stress on any wire insulation. There is a limit to the amount of heat each type of insulation can withstand. Bare wire can also overheat and anneal. This changes its properties and causes some failure to occur when overheated too much. The NEC has created a list that shows the maximum current-carrying capacity in amperes (called ampacity) that is safe for different wire sizes and different insulation types used under varying installation situations. Refer to an NEC wiring code book for more information on this topic.

Wire Sizing

Wire has a diameter-area relationship used to make measurement standards. The units of measurement are in mils and circular mils. A mil is 1/1000 of an inch and a circular mil is the area of a circle that has a diameter of 1 mil. Since the area of a circle is always proportional to the square of its diameter we can use the following as an example:

Diameter In Mils	Area In Circular Mils (cm)
1	1
2	4
4	16
16	256
50	2,500
500	250,000

The measurement is taken at the cross-section of the conductor wire only and not the casing which holds the wire. It is obtained by multiplying the diameter in inches or mils to get the area in square inches or circular mils (cm).

Wire sizes are designated by numbers for the common sizes of electrical wires in use rather than referring to areas or diameters. The gauge most often used is

the American Wire Gauge (AWG) which is also the same as the Browne and Sharpe Company gauge. Gauges for measuring wires in this manner are available at most hardware specific stores that carry electrical supplies.

The larger the wire, the smaller the gauge number. A number 14 wire is the smallest wire that can be used on branch circuits and has a diameter of 64 mils. Smaller wires (16 or 18 gauge) wire can be used for electric cords. Gauges 20 to 50 are for manufactured electrical products and for use in other nonhouse wiring schemes.

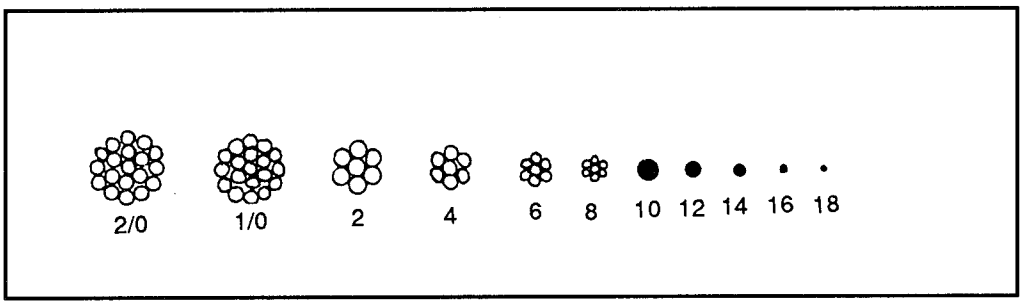

Figure 2: Cross sections of copper wire

Figure 2 shows some actual sizes of wiring that can be found in a dwelling. Wiring numbers for homes will usually start at 18 and increase in size to 1, then 1/0, with 2/0 (which would be 2 naught wire) as the largest home wiring.

18 and 16 wiring sizes can be found in such items as door bells, thermostats, flexible cords and other small appliances. Wiring for 120 and 240 V lighting and receptacle circuits will typically be 14, 12 and 10 AWG wiring. Wiring beginning at 8 and larger will be used for service entrance cables, feeder cables, ground or 240 V appliances. Most wiring will have printed on the casing the size and type of wiring it is and will be found continuously marked.

Stranded Wire

The most common wire to be found in a home will be the 14, 12 and 10 AWG solid wire. These sizes are easily shaped and handled without being too stiff to cause problems in routing them. 8 gauge wire and larger must be a stranded wire for practical reasons.The stranding for these wires is standardized for each size with the number of strands and the size of each strand specified in the NEC.

Color Coding of Wire

Building wire will be found in standardized colors to identify their purpose once they are installed. A common misconception is that white or gray wire is used only for ground. This is not necessarily true. For example, when a white and a black wire are used in a switch loop, white may be used as the hot wire going from

the source to the switch. Another exception is when a two-wire cable of white and black wires is used to supply a single outlet for a 240 V appliance. If white is used in this manner, it must be painted black to identify it as a non-neutral conductor.

Do not take any chances. If you assume every wire to be hot, you're less likely to run into trouble. The most commonly found wire colors are:

No. of Circuit Wires	Color of Wire Insulation
2	White, Black
3	White, Black and Red
4	White, Black, Red and Blue
5	White, Black, Red, Blue and Yellow

In cables and cords the same color scheme will be used. If an additional insulated conductor is provided for bonding, it must be green. A bare wire may also be included for bonding. Bonding wires may also be considered the grounding wires.

Terminal colors are also used to identify the type of connections to be made. They are listed below:

Terminal Color	Wire Type to Connect
Silver	"Grounded" Wires
Green	Bonding or "Grounding" Wires
Copper or Brass	Hot Wires
Oxidized Finish	"Common" Wire (3-way switch)

Low Voltage Wiring

Many electronic items in the home will be connected to the house wiring and require very little power. These devices (like door bells and chimes, loudspeakers, intercom wiring, heating and cooling relays, some types of outdoor lighting) may use smaller nonstandardized wiring. These devices will typically use less than 24 V and pose little or no safety hazard.

The power for operating the low-voltage circuits comes from smaller transformers rated at no more than 100 W. Small transformers supply the low-voltage for circuits that operate indoor signal or control circuits. These may be mounted directly to an outlet box cover or to a joist or stud near an outlet. The primary

winding for the transformer is rated at 120 V and is connected to an outlet or hard-wired. The secondary winding is usually a fixed rating from 8 to 24 V with some having taps that permit voltage choice such as 8, 12, 16 or 24 V depending on the need. These transformers are designed so that if the secondary windings are shorted, the capacity rating of the transformer will not be exceeded. This limits the current output and reduces any chance of secondary fire. The low-voltage also eliminates the shock hazard. These devices are UL listed transformers and rated in watts and/or volt-amperes (VA). The most typical will be 5 to 10 VA, with a few rated at 100 VA.

Low voltage wires should never be run in the same conduit or cable with wires carrying full voltage. They must never be installed in an outlet box or switch box that has full voltage wires unless a metal barrier of the same thickness as the box walls separates the two wiring types.

10/TR
Troubleshooting and Repair

10/TR - A
An Introduction

The exact procedure for troubleshooting will vary depending on the appliance being examined, but in general will follow the same basic pattern. That is, you will begin with the most broad, the most obvious, and the easiest. Is the device getting power? Is it being operated correctly? Has it ever worked? Has it ever been made to perform that particular function before?

Current Draw

Many computers draw just slightly more current than a light bulb — an electric dryer can draw as much current as all the rest of the house combined. Even a coffee maker can draw appreciable current (when compared to many other electronic devices). This means that if a fuse or breaker outside the device is being blown, the problem isn't necessarily in the device itself. It could be that you have simply overloaded the branch circuit supply power. While this isn't likely when dealing with lower-draw items, it's a distinct possibility when considering appliance failures. How far "up the list" you place it depends on the appliance itself and the amount of current it draws.

Keep in mind that this factor applies to more than just those appliances which provide heat. Another major source of current draw is a motor, especially when it is starting. Items which use large motors are particularly prone to popping breakers when the circuit is at or near overload.

In short, what may seem to be a major problem may be cured by simply unplugging a few things, or not using them all at the same time.

More Complex Appliances

As devices become more and more versatile they also become more difficult to operate. All the buttons, knobs and controls may function perfectly, but if the person operating them is doing so incorrectly, the function of the device won't be what it should. It may not operate at all.

Making matters worse in this, owner's manuals are notorious for being poorly written. A classic (and unfortunately true) story is of an instruction manual in which Step 7 warned the person to complete this step before trying Step 3.

This problem is particularly troublesome to someone who has never used that kind of device before, or even someone who is using a different function of a familiar device. The technician often finds himself or herself facing a parade of different appliances, each with its own idea of how the controls should be set.

The best teacher for this is time and experience. Even if you're relatively inexperienced with the operation of a specific appliance, there will be certain similarities that will provide at least a starting place. You might even find that there is some logic in the way manufacturers arrange and label the controls.

Whether it be operation, troubleshooting or repair, it helps to understand how things work in general. The remainder of this section will discuss the major parts used in many different kinds of appliances. Specific examples of each will also be provided, with the concentration being on the similarities.

For example, the heating elements in a stove and coffee maker are different, yet are still very much the same. The function and testing of a thermostat is essential the same whether the thermostat is controlling a small warming plate or a housewide air conditioning system.

10/TR - A/C • R
Air Conditioners, Refrigerators

10/TR - A/C • R - A
An Introduction

General Overview

As with many large appliances, air conditioners are primarily mechanical and secondarily electrical. There is very little electronics about them except in the control system, and even there the electronics tend to be very simple.

The same is true of system problems. Most are mechanical or electrical. When the problem is electronic, it usually involves some kind of sophisticated temperature control inside the home as part of the thermostat. Such units can rarely be fixed. They have to be replaced as a unit. This is because other than the very common components (such as resistors) replacement parts simply aren't available.

To troubleshoot an air conditioning system you will use your own knowledge of electronics troubleshooting as a starting point. The principles are the same. The problem can only be in so many places. By eliminating those areas which are NOT causing the problem, you'll find the one that IS.

Where you begin is determined by the symptoms. Where you stop is determined by your specific training and available equipment.

Much of the information in this section applies to anything that cools—a household air conditioner, window air conditioner, refrigerator, freezer, etc. As far as the technician is concerned the major differences are in size and voltage.

For example, a household air conditioner uses both 120 VAC and 240 VAC, with the high voltage used to drive the compressor motor.

A window unit, refrigerator or freezer operates by the same principles but uses only 120 VAC. (In addition, most refrigerators and freezers do not use a condenser fan.)

Refrigeration Basics

To truly understand how air conditioners and heat pumps work, you may have to change your thinking. Basically, there is no such thing as cold—there is only a lack of heat energy. The less heat energy there is, the more cold it seems to be. Imagine having a large block of ice sitting in a confined area. As the ice melts, the area becomes cooler. Or so it seems. What is actually happening is the opposite. As the ice changes from solid (ice) to liquid (water), heat energy is absorbed from the surroundings. In other words, the ice is not adding "cold," it is taking out "heat."

The function of air conditioning is to move heat energy. To cool an area or substance, heat energy must be removed. To warm an area or substance, heat energy must be added.

This happens because of the direct relationship between temperature and pressure. As you raise pressure you also raise the boiling point of the substance. Pressure cookers use this same principle. At a pressure of 1 atmosphere (standard), water boils and turns into a vapor (steam) at 212°F (100°C). As the pressure inside the cooker increases, so does the boiling point. The water can be considerably hotter than 212°F but not boil. It will remain in its liquid state.

Likewise, were you to lower the pressure, the boiling point would decrease. Were you to try to pour a cup of water on the moon, where the pressure is nearly zero, the water would boil even as it poured.

This fact is important because an air conditioning system uses changes in pressure to cause the refrigerant to change from a liquid into a vapor and back into a liquid again. Just as important is what happens to the flow of heat energy when there is a change in the state of the matter.

A pan of boiling water at normal pressure is 212°F. Turn up the burner on the stove and you'll be adding more heat energy. You will not be increasing the temperature of the water, only the rate at which it changes from a liquid into a vapor. The heat energy is absorbed as latent heat, which means that all of the energy is being used to change the water from liquid to vapor.

This absorption of heat energy as a liquid changes into a vapor is the key to refrigeration. This happens in the evaporator, with the heat given off in the condenser.

The Basic Parts

There are four basic parts in an air conditioning system: evaporator, compressor, condenser, and metering device. In the evaporator a liquid refrigerant enters an area of low pressure. This causes it to boil easily, which means that it changes from a liquid into a vapor. To do that it absorbs heat energy. If you blow air over the tubes of the evaporator, that air gives up heat energy to the tubes, and to the refrigerant. The air becomes cooler.

The compressor then squeezes (compresses) the refrigerant vapor. The increase in pressure lowers the boiling point, making it easier for the vapor to change back into a liquid. In the condenser, air blown across the tubes removes the heat energy and the refrigerant changes back into a liquid again.

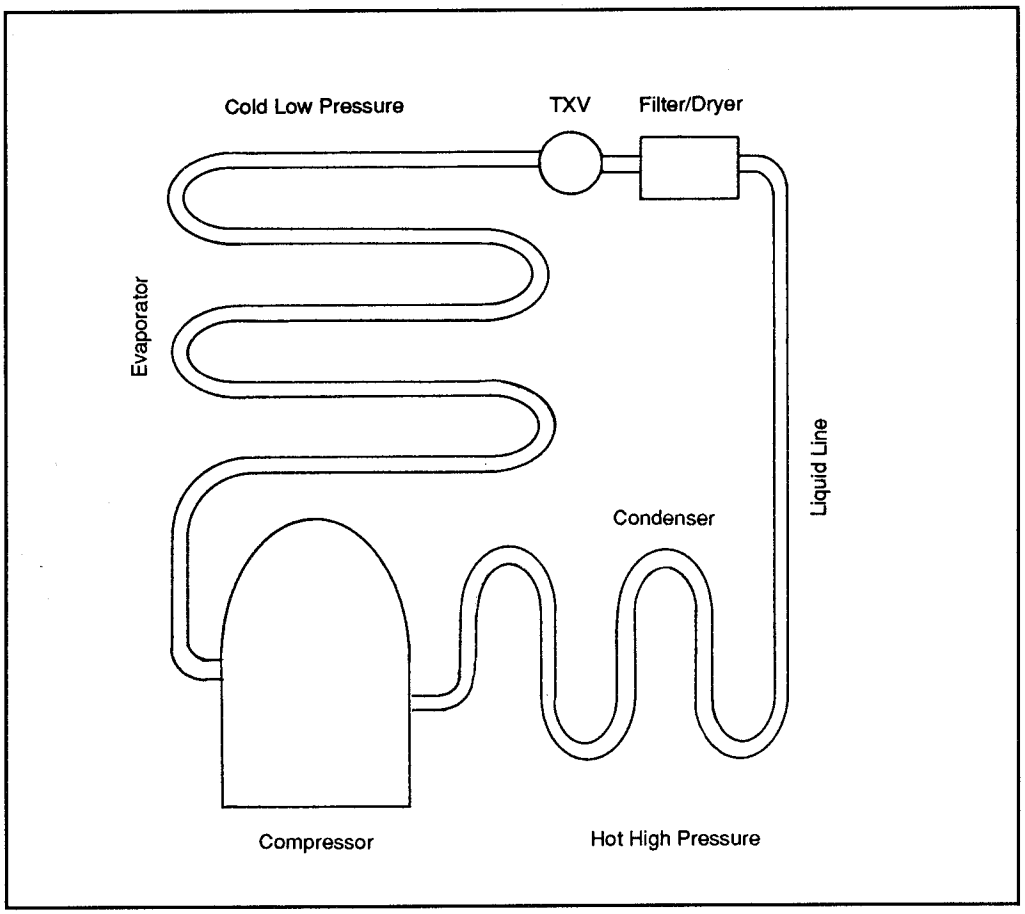

Figure 1: The basic parts of an air conditioning system

The metering device is the spot at which the liquid is "sprayed" back into the low pressure side (evaporator) from the high pressure side (condenser). It meters the flow of refrigerant so that not too much, or too little, passes through.

These are the four basic parts of the system. Each has variations, depending on the system.

Evaporator

The evaporator tubing is wrapped back and forth to become a coil. This puts a greater length into a smaller space and allows a greater transference of heat energy. Most often, fins are attached to the tubing, which further increases the effective surface area where heat transfer can occur. The fan used to blow air across the coil and into the area to be cooled is usually of the squirrel-cage type.

Compressor

In almost all home air conditioning systems, the compressor is hermetically sealed. It cannot be repaired in the field. In many cases, if the problem is the compressor, the solution is to install a new compressor. However, new EPA restrictions could one day make this impossible. (This depends on the characteristics of the refrigerants used to replace the flourocarbons employed now.)

Condenser

The condenser is much like the evaporator. It consists of a tube that is bent back and forth into a coil, and has fins to increase the transfer of heat. The fan used to blow air over the coil is almost always of the blade (propeller) type. (Note that the condenser of a household refrigerator does not have a fan. This condenser is the large set of coils and wires attached to the back of the unit. It loses its heat by convection, which is why it is important to provide plenty of circulation around the unit.)

Metering Device

The kind of metering device used depends on the system. It could be nothing more than a narrow capillary tube with a small orifice at the end. More often it is some sort of automatic valve, the most common of these being the thermal expansion valve, or TXV.

TXV

The TXV uses a heat sensing bulb located on the suction line at the end of the evaporator, just before it enters the compressor. The measurement of heat at this point tells the valve if the evaporator is getting too much or too little refrigerant, and the valve adjusts accordingly.

Superheat

What is being measured is called superheat. As the liquid refrigerant changes into a vapor, it absorbs heat energy but does not change its own temperature. There is no change in the temperature until all of the refrigerant has become a vapor. It then begins to climb in temperature. This rise above the refrigerant's boiling point is superheat, and is what the TXV sensing bulb measures.

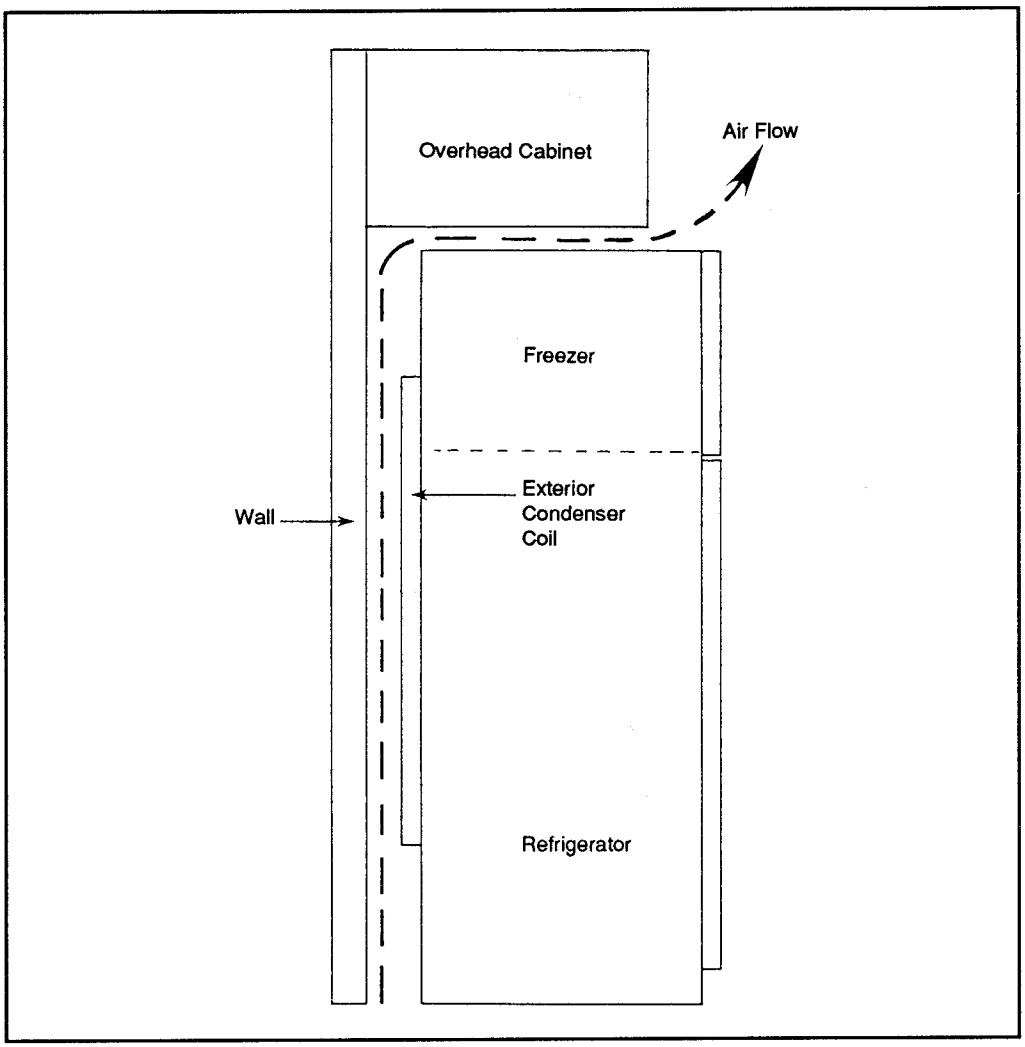

Figure 2: When the condenser does not use a fan, such as on a refrigerator, it's important to provide plenty of circulation. Failure to do so prevents the condenser from losing heat and causes problems.

If the level of superheat is low, the evaporator is receiving too much refrigerant. The TXV valve begins to close to reduce the flow. At the other end, if the level of superheat is too high, the refrigerant is evaporating too quickly which means that there isn't enough refrigerant. The valve opens to increase the flow.

Heat Pumps

A heat pump operates in much the same way as a standard air conditioner. The

difference is that a reversing valve is used to change the direction of refrigerant flow. In the cooling mode, the flow of refrigerant is the same as in an air conditioner. Refrigerant in the evaporator turns to a vapor and absorbs heat, then changes to a liquid in the condenser and gives off heat. A fan blows air across each of the coils, with the evaporator fan blowing cooled air into the home, and the condenser fan venting heat to the outside.

Indoor/Outdoor Coil

In the heating mode, the reversing valve changes the direction of refrigerant flow, causing the evaporator to act as the condenser and vice versa. Because of this changing, the coil over which air is blown into the home is called the indoor coil, and the one over which air is blown to the outside is the outside coil. When the unit is in the cooling mode, the indoor coil acts as an evaporator and draws heat from the air. The cooled air is then blown into the home. When placed in the heating mode, the reversing valve changes the direction of refrigerant flow, causing the indoor coil to act as a condenser. The coil is now giving off heat. This warms the air being blown into the home.

In the cooling mode, the outdoor coil acts as a condenser. Inside is hot refrigerant under high pressure. It's hot in part because the evaporator (indoor coil) has absorbed heat from the air blown into the home. A fan blows air over the outdoor

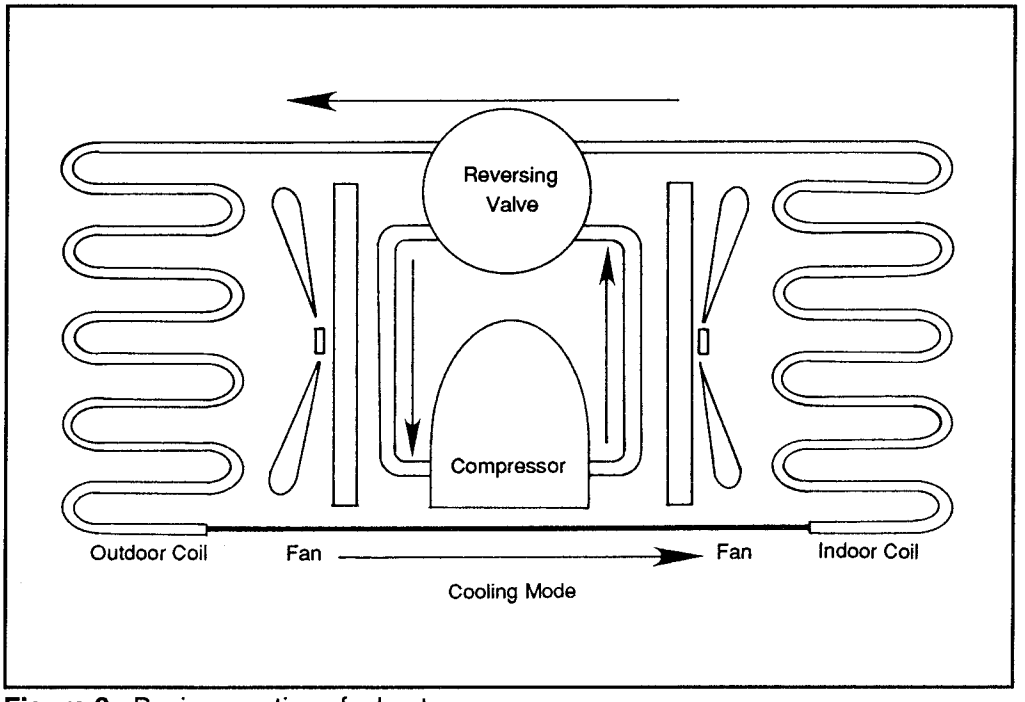

Figure 3: Basic operation of a heat pump

coil and the heat is blown into the atmosphere. All this reverses in the heating mode. Now the outdoor coil is acting as an evaporator, which means it is taking in heat from the surrounding air.

This is a puzzle for many people. If the ambient temperature outside is only 35°F, how can heat be extracted? The answer is in the statement at the beginning of this section—that there is no such thing as cold, only a relative lack of heat. Until the temperature reaches absolute zero (which it never does), there is heat energy present. At 35°F, there is plenty of heat energy. To extract it, all you have to do is make sure that the coil temperature is lower than the surroundings.

Heat Transfer

A practical limit is reached, however. The evaporator can be made to be just so cold. And an additional factor plays a part. The rate of heat transfer is dependent on the difference in temperatures. If the ambient temperature is 60°F and the coil temperature is 34°F, the rate of transfer is fairly quick. If the ambient temperature is 35°F with the coil temperature at 34°F, the rate of heat transfer is very slow. In other words, the efficiency of the heat pump decreases as the ambient air temperature decreases. Eventually a point is reached at which the unit will not function at all. For this reason, many heat pumps are also equipped with one or

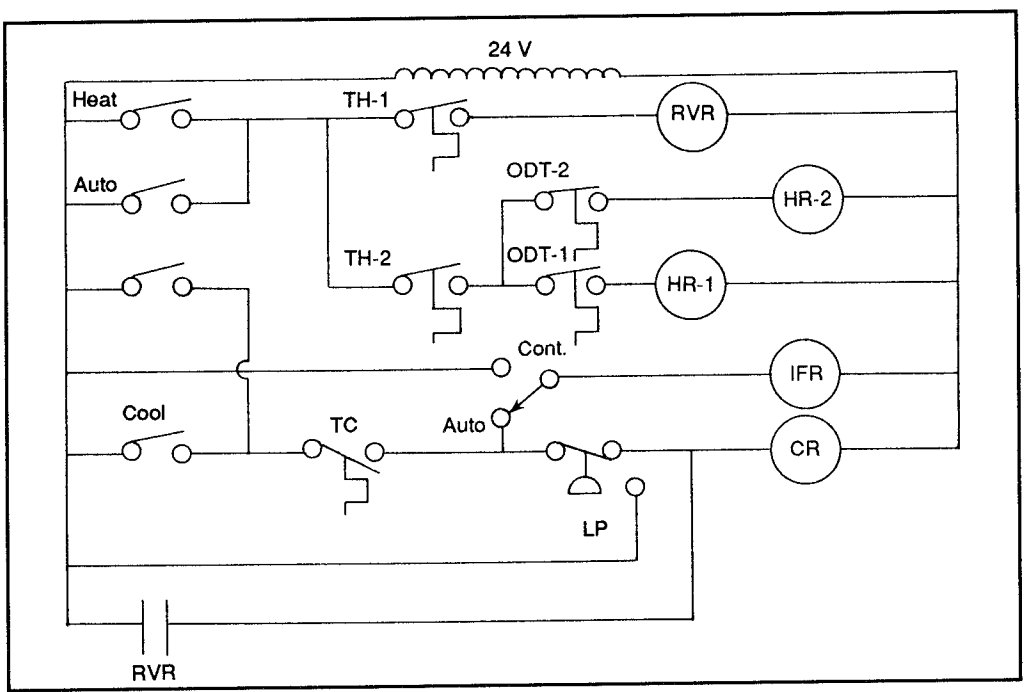

Figure 4: Heat pump wiring diagram showing method for activating auxiliary heat strips

two auxiliary heat strips. These are resistance-type heating elements usually installed in the ducting.

Sensors are used to automatically activate these elements. A common set-up for this is shown in Figure 4.

Thermostats

When the heat pump is in the heating mode, the HEAT switch is closed. As the temperature in the home decreases the thermostat TH-1 closes. This energizes the reversing valve relay (RVR), which causes the reversing valve solenoid to change position so that the direction of refrigerant flow reverses.

Also located in the inside thermostat housing is a second thermostat, TH-2. This is set to close at about 2 degrees lower than TH-1. That is, if the thermostat setting is at 74°F, TH-1 will close at this temperature and start the heat pump but TH-2 will remain open. If the temperature inside continues to fall—as it will if the ambient outside air temperature is causing a loss of efficiency—TH-2 will close. Outside are two more thermostats, one for each of the auxiliary heating strips.

As the outside air temperature decreases below a preset level, and unit efficiency decreases, ODT-1 will close. This energizes the heating relay (HR-1) which allows the first heating strip to come on. If the temperature outside continues to drop, ODT-2 will close. HR-2 is then energized and the second heating strip comes on.

System Accessories

Filter/Drier

Most systems use other parts, which are often termed as "accessories" because a refrigeration system can operate without them. One of the most common is a filter/drier. This device removes moisture from the system. (In the "Warning" section you'll learn why this is so important, and how even one drop of moisture can cause the system to fail.) Filters/driers may be located almost anywhere in the system.

Sight Glass

Usually located in the liquid line just before the metering device is a sight glass. This is a diagnostic device the technician can look through as the refrigerant flows through the line. For example, bubbles show that there is either a restriction or that there is air in the line. Streaks show a serious condition of low refrigerant level. Often a part of the sight glass is a moisture indicator which changes color if moisture is present.

Oil

Oil is needed in the compressor but is not needed (or wanted) elsewhere in the

system. To reduce the amount of oil that circulates, and to keep it in the compressor crankcase, an oil separator might be used. If used, this device is installed just after the compressor.

Crankcase Heater

Especially in colder areas, the system may use a crankcase heater. The purpose is to keep the oil in the crankcase warm. This makes starting the compressor easier. It also helps to keep refrigerant from mixing with the oil.

Accumulator

In some systems, the evaporator has an accumulator installed. Its function is to collect any liquid refrigerant that remains so that only vapor goes into the compressor. If liquid gets into the compressor it will cause a condition called liquid slugging, which means that the compressor's piston is literally slamming against the liquid. This can cause serious damage if allowed to continue. An accumulator helps to reduce the chances of this.

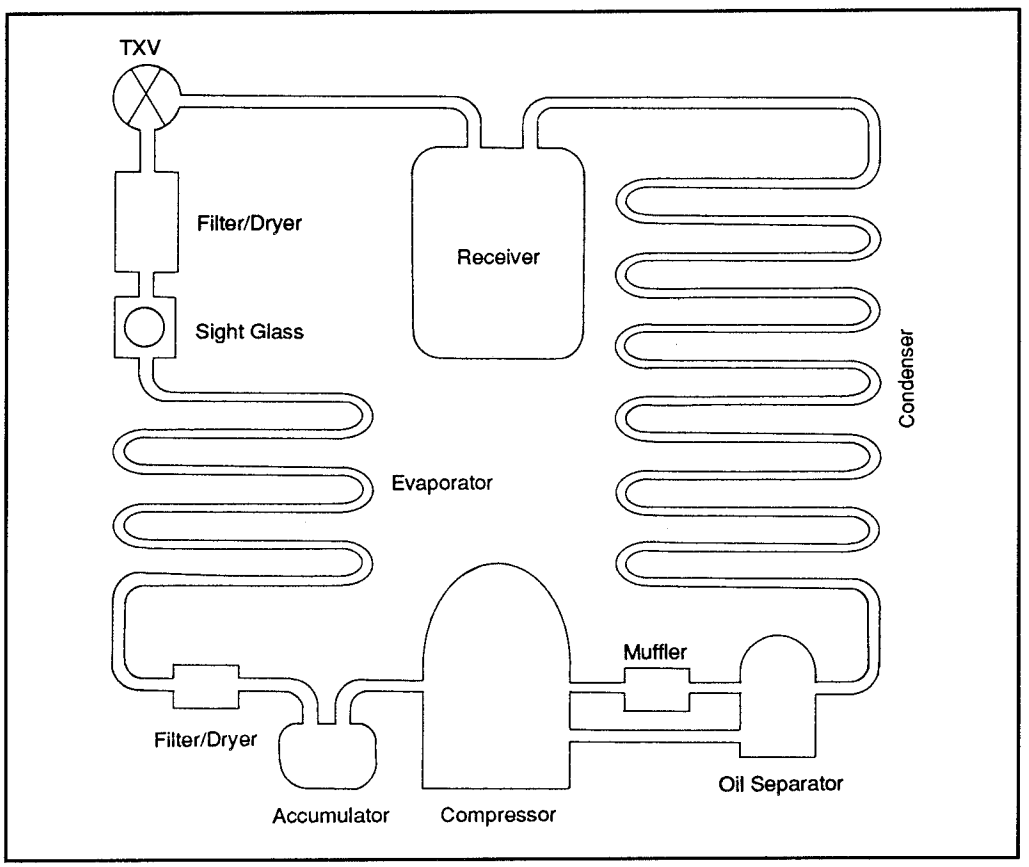

Figure 5: A system with accessories

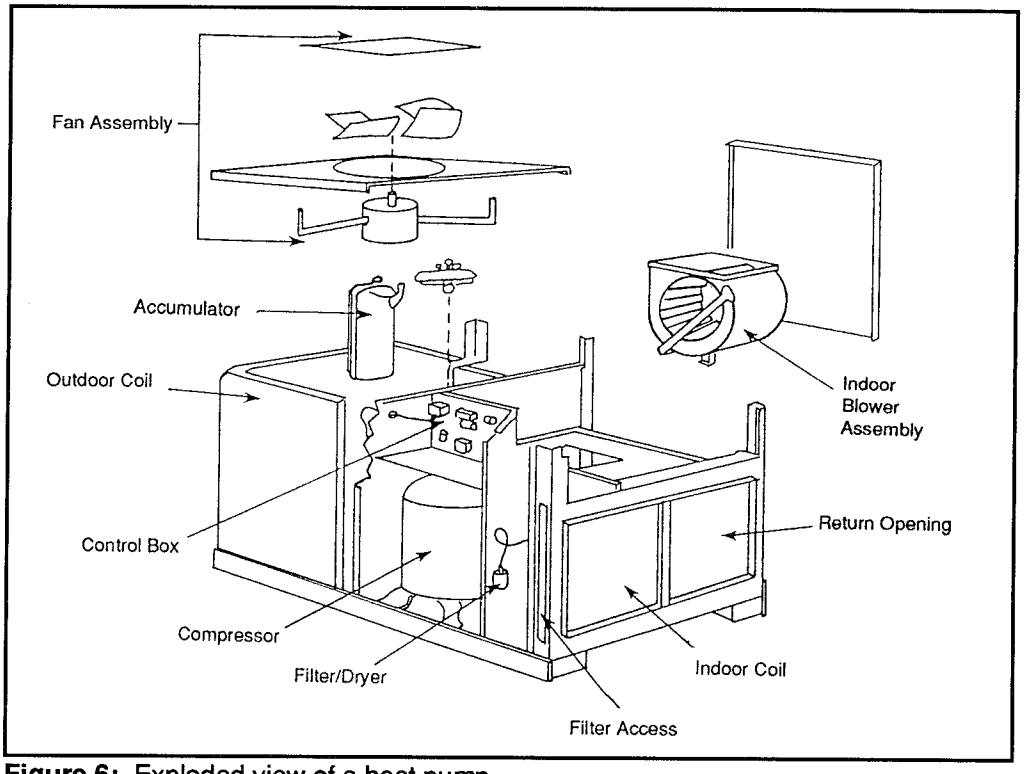

Figure 6: Exploded view of a heat pump

Receiver

The condenser might use a receiver. This collects and holds liquid refrigerant until needed by the system. The service technician may use the receiver to hold all of the system's refrigerant while performing work on the lines. To do this, he shuts off the receiver's output and has the compressor pump all of the refrigerant into the receiver. Once this is done the receiver's inlet is closed.

Valves

Throughout the system may be various valves, especially check valves which allow refrigerant to flow in one direction only. Sensing devices, particularly those which measure temperature in different parts of the system, are often employed to assure better control.

Thermostat

The system will also have a control, the heart of which is the thermostat. These will usually be operating at 24 V, and will use a bimetallic strip and perhaps a mercury switch to send the control voltage to turn on the air conditioner when the temperature inside the home rises above the set level. Also in this part of the system is a transformer to bring the 120 VAC line voltage down to the needed 24 V.

10/TR - A/C • R
Air Conditioners, Refrigerators

10/TR - A/C • R - EP
Electrical Problems

Electrical System

The electrical system of a household air conditioner consists of the incoming line voltage, usually at both 120 and 240 VAC. The 120 VAC generally powers the evaporator and condenser fans, and the other electrical parts that require the lower voltage. The compressor is usually at 240 VAC. (As above, most refrigerators, freezers and window air conditioners use 120 VAC only.)

Power for household units passes through two high capacity fuses mounted in a box separate from the home's main power box. Usually, the power comes from the meter, through the main circuit panel, through this fuse box and then into the air conditioning unit. Power is then routed to the different circuits.

Because the circuits are actually in parallel, if one circuit goes out, the others will still be active. For this reason, it's very important to understand the schematics used in air conditioning if you are to do electrical troubleshooting.

Air Conditioning Schematics

Many electronics technicians can soon become lost when looking at a schematic for air conditioning. One reason is that some of the symbols are unique to refrigeration technology. Another is that the terminology is somewhat different (mostly because of the kinds of components used).

Another cause for confusion is that the structure of the schematic is different. Electronics schematics consist of parallel and series circuits and are dealt with that way.

In air conditioning, there is more concentration on individual branch circuits, each of which is treated as a separate series circuit. The fact that each of these is connected in parallel to all the others is virtually ignored, and can be because of how the system works.

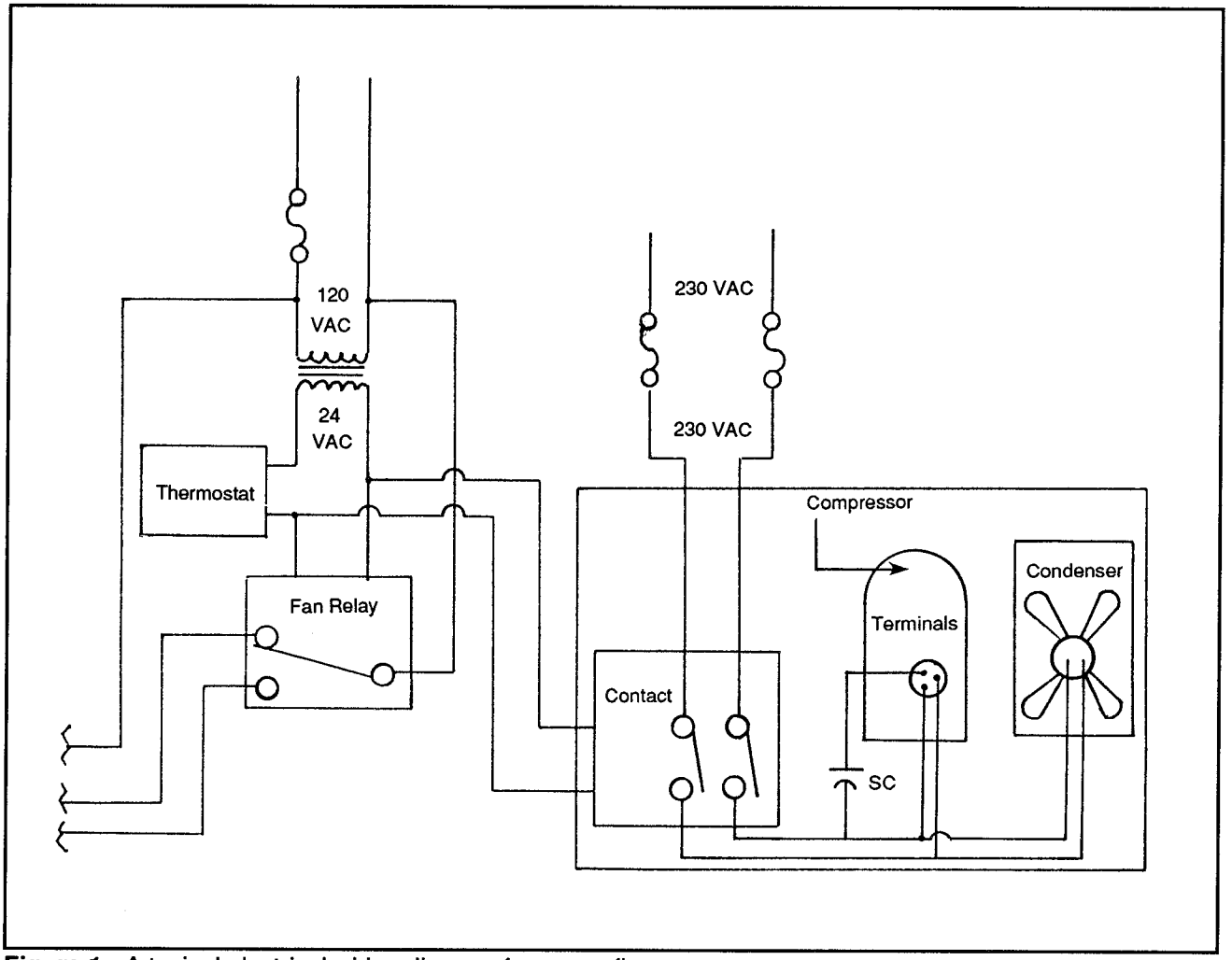

Figure 1: A typical electrical wiring diagram for power flow

Special Schematic Symbols in Air Conditioning

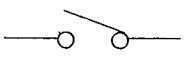	SPST
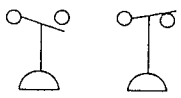	N.O. - N.C. Pressure

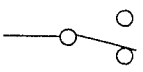	SPDT
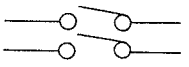	DPST

Special Schematic Symbols in Air Conditioning *(Continued)*

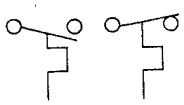	Close/Open on Rise Temperature
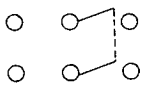	DPDT
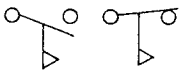	N.O./N.C. Flow
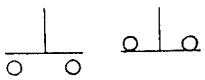	Make N.O./ Break N.C.
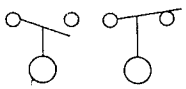	Liquid Level
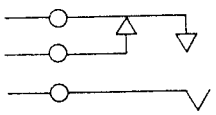	Make Before Break
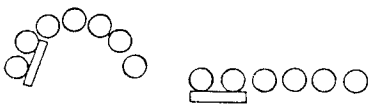	Segment Selector
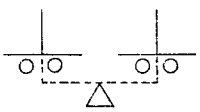	Double Circuit Push Button

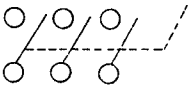	Disconnect
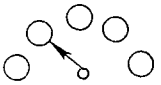	Selector
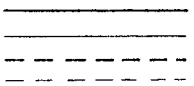	Power (factory wired) Control (factory wired) Power (field wired) Control (field wired)
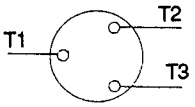	Single Phase Motor
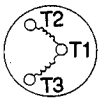	Single Phase Motor
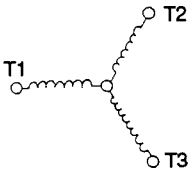	Single Phase Motor
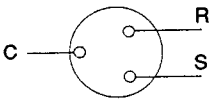	Three Phase Motor
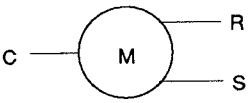	Three Phase Motor

Special Schematic Symbols in Air Conditioning *(Continued)*

R, C, S	Three Phase Motor
	Squirrel Cage Induction Motor
T	Thermo Couple
V	Voltmeter
A	Ammeter
C	Contactor
	Plain
G	Colored

	Reversing Valve Solenoid
S, D	Reversing Valve Solenoid
C	Solenoid Coil
	Solenoid Coil
K	Klixom Relay 2 - Terminal
	Male
	Female
	Engaged

Special Schematic Symbols in Air Conditioning *(Continued)*

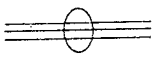	Cable
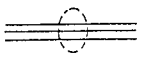	Shielded Cable
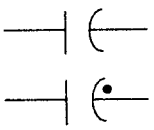	Capacitors
	Fusible Link
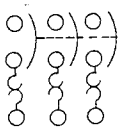	Thermal Circuit Breaker
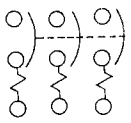	Magnetic Circuit Breaker

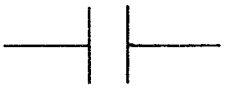	Open Contact
	Closed Contact
	Relay Contact
	Thermocouple
	Thermo Oveload Coil
	Thermal Relay

The rules of electronics still apply. In a series circuit the voltage changes (drops) while the amperage stays the same. In a parallel circuit the amperage changes and the voltage stays the same. In the air conditioning schematic, the voltage is the same through each of the legs.

In Figure 2, each leg is powered because the voltage is the same across each of the series legs. The indicator light will show this. In this particular case, the refrigeration technician referring to the schematic will know to check for voltage drop across the suspected leg when troubleshooting.

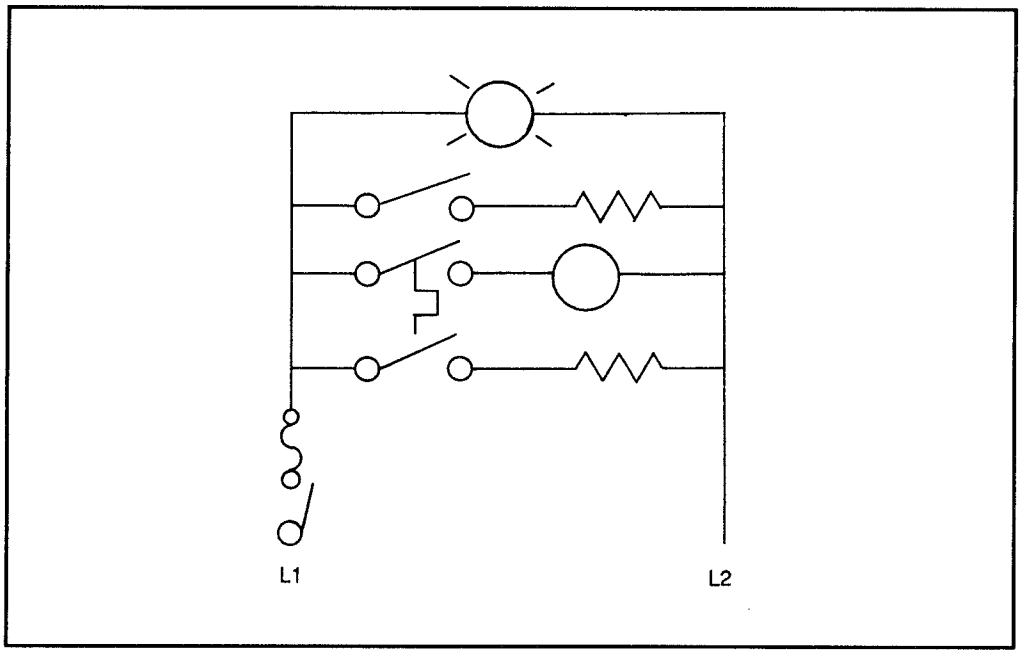

Figure 2: A simple schematic. Each of the parallel legs is treated as its own series circuit. Note that the "hot" line is labeled L1, and that the electrical return is labeled L2.

As shown in Figure 2, each leg consists of a load (such as a motor, light or the coil of a relay) and a switch to control it. The switch may be a manual (mechanical) switch which has to be physically pushed or flipped, or an automatic switch, such as a thermostat. It may also be the contacts of a type of relay.

It's important to note that in a refrigeration schematic, the relay appears in two or more places. The coil that activates the relay's contacts are in one circuit—the contacts are elsewhere. Although this might sound confusing, it is actually done for clarity, and because of what the relay is doing.

Figure 3 is a partial schematic for a heat pump, simplified for easier comprehension. (Note that a real schematic does not have the individual circuits labeled with letters.)

L1 ("hot") and L2 (return) are both fused. The switches shown are actually together, as a DPST power disconnect switch. Circuit A is the contactor circuit. (A contactor is a kind of relay designed to carry large currents. In this case, the contactor controls the compressor motor.) CR denotes the normally open contacts of the control relay (also labeled CR and located in leg H at the top).

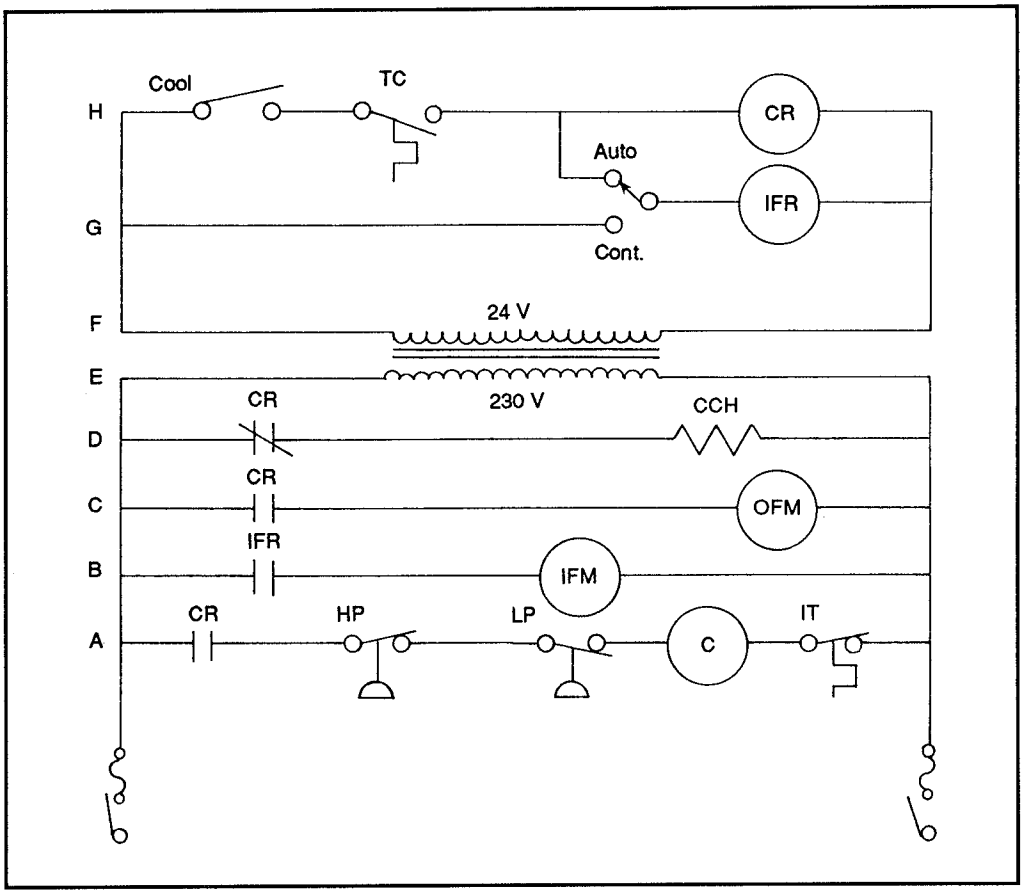

Figure 3: Heat pump schematic

Since these contacts are normally open, the circuit does not carry any power unless the control relay is energized.

High/Low Pressure Switch

Protecting the compressor are a high pressure switch and a low pressure switch. If the refrigerant pressure in the system goes above the preset limit, the high pressure switch will open and cut power. If the pressure drops below a preset limit, the low pressure switch will open and cut power. Also shown is an internal thermostat (IT) built into the contactor. If current flow is excessive, this thermostat will open and again power will be cut.

Indoor Fan Motor Circuit

Circuit B is the indoor fan motor circuit. This circuit contains the fan motor and a pair of contacts on the indoor fan relay (IFR), which is located in leg G. These contacts are normally open, so no power will go to the fan unless the relay is

energized to close the contacts. Circuit C is similar. Here we find the outdoor fan motor (OFM), and another pair of normally open contacts on the control relay (leg H).

CCH

In circuit D the load is a crankcase heater (CCH), and a third pair of contacts on the control relay. This time the contacts are normally closed, which means that the crankcase heater stays on when the system is not in use, but shuts off as the contacts open when the control relay is energized.

Transformer

We next come to the transformer which changes the incoming 230 VAC to the lower 24 VAC used in the control circuits. Keep in mind that although there appear to be two separate sections, the components in the 24 V side are controlling the components in the 230 V side.

Leg G contains a switch that can energize the indoor fan relay continuously, and thus keep the fan running, or can be placed in the automatic setting so that the fan comes on only when the compressor is running.

Control Relay Circuit

This brings us to the control relay circuit, H. Until the "cool" switch is closed, no power will flow and the control relay will not be energized. Once this switch is closed, current still won't flow unless the temperature rises above the set level and closes the contacts of the cooling thermostat (TC).

If the cooling switch is turned on (contacts closed), and the temperature is high enough to close the contacts of the thermostat, current flows to the coil of the control relay. The plunger inside causes the three pairs of contacts to change position. The normally open contacts in leg A close, energizing the compressor contactor which starts the compressor. The normally open contacts in leg C close, which starts the outdoor fan that blows air across the condenser coils. The normally closed contacts for the crankcase heater open and this heater is shut off.

A Complete Schematic

Depending on the manufacturer and the design, a complete system schematic can be very complex or relatively simple. A simple schematic of a typical window air conditioner is shown in Figure 4.

Remember that small air conditioning units like this are designed to operate on the nominal 120 VAC. Consequently, the schematic shows only L1 (hot) and L2 (return). Both the compressor and fan motors are single-phase. These, and the system in general, are protected by a high pressure switch (HP) and a low

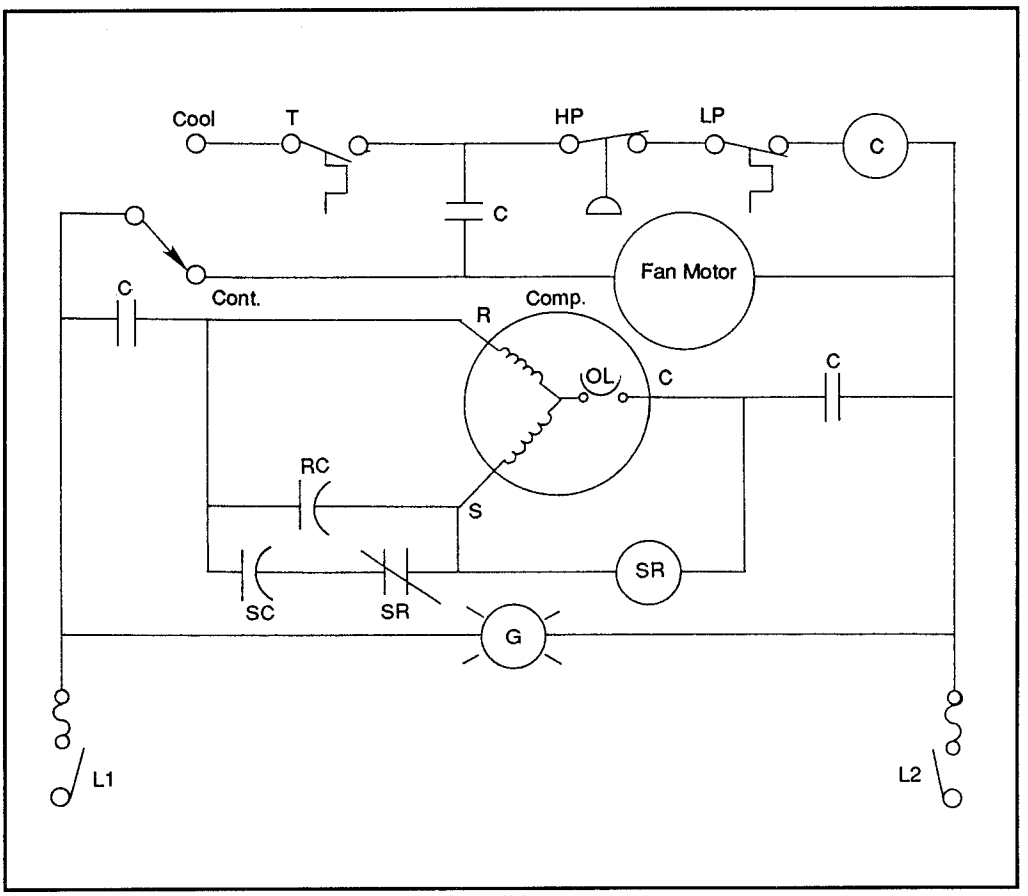

Figure 4: Schematic of a window air conditioner

pressure switch (LP), both in series with the contactor. If the system pressure rises too high, the high pressure switch breaks the circuit and the contactor (C) is de-energized. If the pressure decreases, the low pressure switch will break the circuit and again the contactor will be de-energized. Either way, the contacts to both the fan motor and compressor will open and the system will shut down.

Klixon

The compressor motor in this unit is internally protected from overload. In this case a temperature sensing Klixon is used. If the compressor motor begins to work too hard, its temperature increases. If the rise is too great, the Klixon releases and contact is broken. The motor shuts off.

Fan Motor

The fan motor can be set for the fan to run continuously (upper position), or to run only when cooling is desired (lower position). In the COOL position, the circuit is operated through a thermostat (T). Note that this thermostat also

completes the contactor (C) circuit, and that the fan motor circuit has contacts operated by the contactor.

As the switch is placed to COOL, the start relay (SR) activates the circuitry to the start winding of the motor. The relay contacts (SR) are normally closed, which keeps the starting capacitor (SC) "on hold." The charge in the capacitor momentarily flows through the start winding, giving the motor a "boost" to start turning. The contacts when open and the starting capacitor is taken out of the circuit. This leaves the running capacitor active to smooth the motor's operation.

Mechanical Examination

In troubleshooting such a system, you would begin by carefully examining the mechanical parts and conducting a visual examination. Exactly how you proceed depends on the symptoms. (See the Troubleshooting chart.)

Look at the schematic again. Air conditioners virtually always have a number of components designed to protect the system. In this case, there are both high and low pressure switches, plus internal thermal protection in the compressor motor. If the pressure goes up or down, either of the two pressure switches will cut the power. At the same time, these conditions (and others) can cause the compressor motor to overheat. This trips the internal Klixon and again the system shuts down.

A common misconception is that a system that fails to operate means that the compressor has gone out. Compressors are fairly tough by design, and as you've seen from the schematics there are a number of components which help to protect the compressor from damage. The compressor is unlikely to be the sourceof the problem. Suspect first the various components which control and protect it.

A system which starts, or tries to, then stops, is unlikely to have a compressor problem. First check the controlling components, such as thermostats, relays, contactors and capacitors. Any one of these can make a minor problem seem major and all are fairly easy to check with a VOM or DMM. Test for the presence of voltage and for continuity.

For example, the thermostat controls the cooling cycle. When the contacts are open (the temperature is cool enough), there should be infinite resistance across the contacts. As the temperature rises the contacts close. At this point there should be no resistance. If the contacts have closed (or are supposed to have closed) and the resistance across the contacts is still high, the thermostat will have to be replaced.

Much the same is true of the other electrical components. Keep in mind that many

of the control relays and contactors have more than one pair of contacts, each controlling a different leg of the system. Sometimes these contacts are labeled. Other times you'll be able to visually track what each pair of contacts controls. With a little thought, now that you know the fundamentals of how an air conditioner is designed, you should have no problem figuring out if the contacts should be open or closed.

For example, the contacts that control a motor are always the open type. With the system off, the reading across these contacts should be infinite ohms and no voltage or current. If the reading is other than this, the contacts are likely fused shut and the relay unit should be replaced.

With the system on, and the contacts closed, there should be line voltage present across the contacts. If there isn't, something earlier in the line is stopping the flow of power. Test backwards in the line, beginning with the incoming side of the relay or device. If the device is energized but is not responding properly, the device will have to be replaced. If no power is coming in, again something earlier in the circuit is stopping the power.

The same technique applies to all power controlling devices. This includes pressure and flow switches. Testing these for voltage and resistance will indicate either a bad switch or a problem with the system's refrigerant level.

10/TR - A/C • R
Air Conditioners, Refrigerators

10/TR - A/C • R - MP
Mechanical Problems

Introduction

Mechanical and in particular system (refrigerant) troubleshooting are necessarily limited. However, there are some relatively simple steps that can be taken. (These steps apply to all air conditioning and refrigeration systems, including those of your automobile.)

As stated earlier, most problems are caused by mechanical parts. Squeaks, for example, are a sign of worn bearings or a misaligned motor shaft. If you listen carefully, you can often hear the contacts of a relay open or close. (Keep in mind that the relays and contactors used in air conditioning tend to be rather large.)

In a few cases, repair is possible. You might, for example, be able to clean the contacts of a relay if they have become corroded (although you should investigate the cause of the corrosion if possible). A misalignment may be brought on by nothing more sinister than loose mounting bolts.

Other noises, such as rattling, are often caused by a pipe or line that has become loose. Also, these lines are sometimes passed through bushings or other insulating material. In both cases, the purpose is to absorb vibration. If these parts have come loose or have worn, the lines could begin to vibrate, causing noisy operation.

Especially if you suspect that the system is malfunctioning due to a refrigerant related problem, examine all the lines, and particularly the connections, for signs of a leak. The most common indication is an oily appearance. The refrigerant itself evaporates almost instantly, but since at least some oil is carried through the system, and does not evaporate, a leak is often apparent.

Unfortunately, if this is the problem, there is little choice but to call a certified technician.

Troubleshooting an air conditioning system is much like troubleshooting anything else. Begin with the symptoms, determine the probable causes of those symptoms, and by the process of elimination locate the source of the trouble. The main problem you will encounter is if the problem has to do with the refrigerant part of the system. As above, this kind of diagnostics and repair has to be left to a certified technician. If your efforts in this regard cause a loss of refrigerant, you'll have only worsened the situation.

The troubleshooting chart below is limited to the things you can check and usually cure.

Air Conditioning Troubleshooting Table

Problem	Cause	Cure
Poor cooling	Dirty filter Dirty condenser or evaporator coil Damaged coil fins Dirty or broken fan blades Fan motor (s) bad Wind around coils Low refrigerant or other system problems	Replace Clean coils Repair, clean or replace Examine, test, replace if needed May be correctable, or you may have to wait Call a certified technician
Low ventilation	Blockage in duct Damage to duct Dirty or broken indoor fan blades Indoor fan motor bad	Examine and clear Examine, repair Repair, clean or replace Examine, test, replace if needed
Unit cycles on and off too often	Thermostat bad Protective device (pressure, flow, level of overload) bad Improper refrigerant level	Test, replace if necessary Test, replace if necessary Call a certified technician
Solenoid or relay hums	Low voltage Loose connections Sticking valve plunger	Test, correct if possible Examine, tighten connections Replace solenoid unit
Unit is noisy	Mounting bolts loose Compressor is damaged	Check all bolts and screws, tighten Call a certified technician
Unit does not work	No power Blown breaker or fuse Thermostat bad Relay or contactor bad Protective device bad Control (low voltage side) transformer bad System problem	Test for power Examine, test, reset or replace (but try to find out why it blew!) Test, replace if necessary Test, replace if necessary Test, replace if necessary Test, replace if necessary Call a certified technician

Refrigeration Troubleshooting Table *(Continued)*

Problem	Possible Causes	Symptoms
Reduced Air Flow	Dirty condenser or evaporator coils Damaged cooling fins Air flow restriction(s) Fan blades or motor(s) Overload devices tripping Loose fan belt Improperly adjusted pulley Improper unit ventilation	High suction and head pressure Flooded evaporator Possible liquid sluggung Insufficient superheat in suction line Insufficient sub-cooling in condenser
Refrigerant Overcharge	Too much refrigerant	High liquid level High suction and head pressure Flooded evaporator Liquid slugging in compressor Excessive sub-cooling
Refrigerant Undercharge	Leak Improperly charged refrigerant	Starved evaporator Low suction and head pressure High superheat Reduced cooling Flash gas in liquid line (shows as bubbles in sight glass) Frost line on evaporator line
Compressor Pumping Poorly	Blown head gasket Bad compressor valves	Noise Improper cooling Overheating
Compressor Overheating	High voltage Low voltage Refrigerant undercharge Oil undercharge Excessive evaporator load Bad valves	Noise Improper cooling Burned out compressor
Compressor Seizure	Refrigerant floodback Flooded starts (due to oil migration) Oil trapping Insufficient oil Insufficient refrigerant Compressor burnout	System failure/shutdown
High Head Pressure	Refrigerant overcharge Reduced air flow	Hot liquid line Intermittent bubbles in sight glass
TXV Overfeeding	Improper superheat setting Improper sensing bulb placement Loose sensing bulb Excessive oil in system Wrong type of TXV Bad or sticking TXV	Evaporator flooding High suction pressure Low sub-cooling in condenser Compressor runs cooler
TXV Underfeeding	Improper superheat setting Improper sensing bulb placement	Starved evaporator Low suction pressure

Refrigerant Troubleshooting Table *(Continued)*

Problem	Possible Causes	Symptoms
TXV Underfeeding (cont'd)	Loose sensing bulb Bad sensing bulb (loss of internal refrigerant) Plugged drier Restriction in TXV inlet screen Plugged line(s) Refrigerant overcharge Wrong type of TXV Bad or sticking TXV	Low head pressure High superheat in suction line High sub-cooling in condenser Frost or ice on evaporator
Erratic TXV Operation	Oversized TXV Rapid evaporator load changes Very light evaporator load Flash gas in liquid line	Low or high suction pressure Low or high sub-cooling in condenser Evaporator flooding or starved evaporator Improper cooling

Sight Glass Readings

Sight Glass Indication	Possible Causes
Clear Sight Glass	Proper refrigerant charge Overcharge No charge
Bubbles in Sight Glass	Refrigerant undercharge Liquid line restriction Air or moisture in system
White, Foamy Bubbles in Sight Glass	Dessicant core in drier breaking down
Oil Streaks in Sight Glass	Extreme undercharge No refrigerant

Warning!

Unless you have the proper training and equipment you are strongly advised NOT to attempt work on the system in any way that will affect the refrigerant level. That is, while you can work on the electrical and electronic parts of the system, don't attempt repairs to the compressor, tubes or coils. There are a number of reasons for this.

Government Regulations

As of July 1, 1992 new regulations went into effect that limit and will eventually ban the release of any fluorocarbon into the atmosphere. More and more suppliers won't even sell refrigerants to anyone who is not certified. So far, getting certified isn't difficult. It has been predicted that the testing for certification (or re-certification) will become more and more difficult.

If you make a mistake and allow even a small leak, the refrigerant level will decrease and you won't have any way to replace the lost refrigerant. This in turn will cause the system to function less efficiently and could cause it to fail completely. If too much refrigerant has escaped, the system could self destruct. As refrigerant escapes, so does oil. This oil isn't needed in most of the system but is critical in the compressor. If the level is too high or too low, the compressor will almost certainly be damaged.

It's possible to recover the refrigerant, to complete the work and to then put the refrigerant back in. This will be allowed by law but is a complicated process involving expensive equipment. It also brings considerable risks. (The same is true of doing any work in this part of the system.)

Great care is taken by manufacturers to be sure that the refrigerant is uncontaminated. The two worst contaminants, often introduced by a careless technician or improper procedures, are air and water.

Air in the System

Air takes up space in the system. This isn't as critical in the evaporator, but can reduce the cooling available. In the condenser, as the refrigerant changes back into a liquid form, the air does not. This creates bubbles which can cause a variety of problems. The liquid refrigerant is purposely kept right on the edge of turning back into a vapor. It's designed to do this when the pressure drops. Air bubbles cause small areas where the pressure is lower than in the surrounding liquid. This can cause the liquid to "flash", which means it turns back into a vapor and changes temperature quickly. The system is supposed to do this through the metering device and in the evaporator, but NOT in the condenser.

Moisture in the System

Worse is that air can contain moisture. Moisture of any kind, in any amount, in the system is disastrous. Depending on its size, the average home air conditioning system will contain somewhere between 10-15 pounds of refrigerant. If there is as little 1 or 2 drops of water in that, the system will quickly degrade.

Icing

One of the simplest and least destructive things that can happen is icing of the metering device. The temperature there is below the freezing point of water. Remember that water expands when it freezes. This can cause the orifice to clog, partially or completely. If the refrigerant flow stops, the system just isn't going to work. It's possible that damage could result.

Chemical Reactions

Worse are the chemical reactions, and the worst of these is a reaction with the copper in the system. The copper may be dissolved. Heat, especially in the compressor, causes the dissolved copper particles to be desposited on any parts

that are made of iron or steel. The effect is almost the same as if you electroplated the copper onto the steel.

Clearances of the bearings and other mechanical parts are critical. As copper gets plated onto the parts, the clearances are reduced. Friction increases. Efficiency decreases, heat and current draw increase. In time the compressor will seize.

Once again, you are strongly advised to leave this kind of work to trained professionals with the proper equipment. It is too easy to cause irreprable damage to the system. Imagine making a mistake and releasing all the R-12 refrigerant. R-12 is no longer available, and there is not (as yet) a legal substitute. A relatively simple problem can easily become a complicated and expensive mess. Due to the cost, it is often less expensive to replace the entire unit.

10/TR
Troubleshooting and Repair

10/TR - C
Controls

Overview

Many controls are mechanical or electro-mechanical in nature. A simple 2-pole switch uses a mechanical (physical) motion to make or break a contact. More complex switches will allow positioning of the contacts to operate a choice of functions. Other controls allow adjustments via changes in resistance or capacitance. Some are spring-loaded and thus perform functions such as "temporary on" (the sending of a temporary electrical pulse) or perhaps allow timing.

The problem is that anything mechanical is subject to mechanical wear. Not only can the control itself wear as a whole, the contacts inside can wear and can corrode. It's not uncommon for an appliance or other device that is in perfect working condition to fail because a mechanical switch has worn out.

Testing

Testing of such controls is almost always a matter of using a DMM to check for continuity and shorts. That is, when the contacts are in place the resistance should be 0 Ω, while when the contacts are not in place the resistance should be infinite.

This kind of control is still the norm. Various electronic controls which limit physical motion are becoming more common.

Electronic Control Panels

Electronic control panels for various electronic devices in the home can vary greatly in the number of buttons and the number of controls they support. For example, a typical microwave oven control panel may offer 18 or more different buttons to control each of the functions of the microwave. When multi-function panels such as this are provided, the signals are usually processed by an onboard microprocessor.

Figure 1 shows a typical microprocessor control section. This particular section is controlled by a Hitachi HMCS 45A microprocessor. The driver uses some 44 I/O lines to input information and control various aspects of the microwave. Figure 2 shows a section breakdown of how these interrupts connect to the keyboard. Checking each of the I/O lines with a logic probe is an easy method

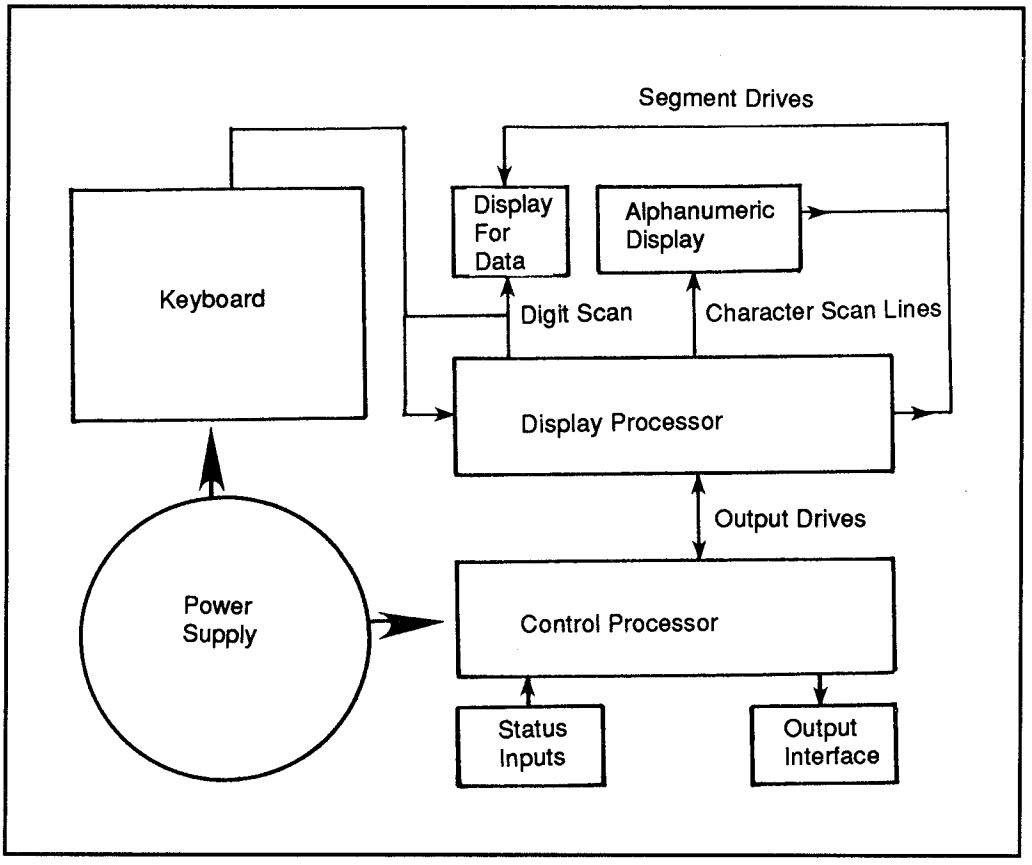

Figure 1: Typical processor control block diagram

for determining if problems are occurring in switch or I/O lines.

Touching a key inserts a capacitance between the drive pad and signal ground. This forms an AC voltage divider and the signal which is applied to the comparator that is reduced in half. This is not enough for the output to change states and the microprocessor sees the absence of a signal as a key being pressed. This is then converted and processed by the control microprocessor and activates the required function for the microwave.

Much the same is true in any multiple-control panel. It should be noted that it isn't uncommon for the panel to be built and installed as an assembly. Replacing just one of the button switches (usually of the membrane type) is often difficult or impossible. The best you may be able to do is to gain access to the processing chip, test it for incoming signals with a logic probe and determine if the control panel or the chip must be replaced. Quite often both are the same, since the microprocessor is mounted to the control panel circuit board.

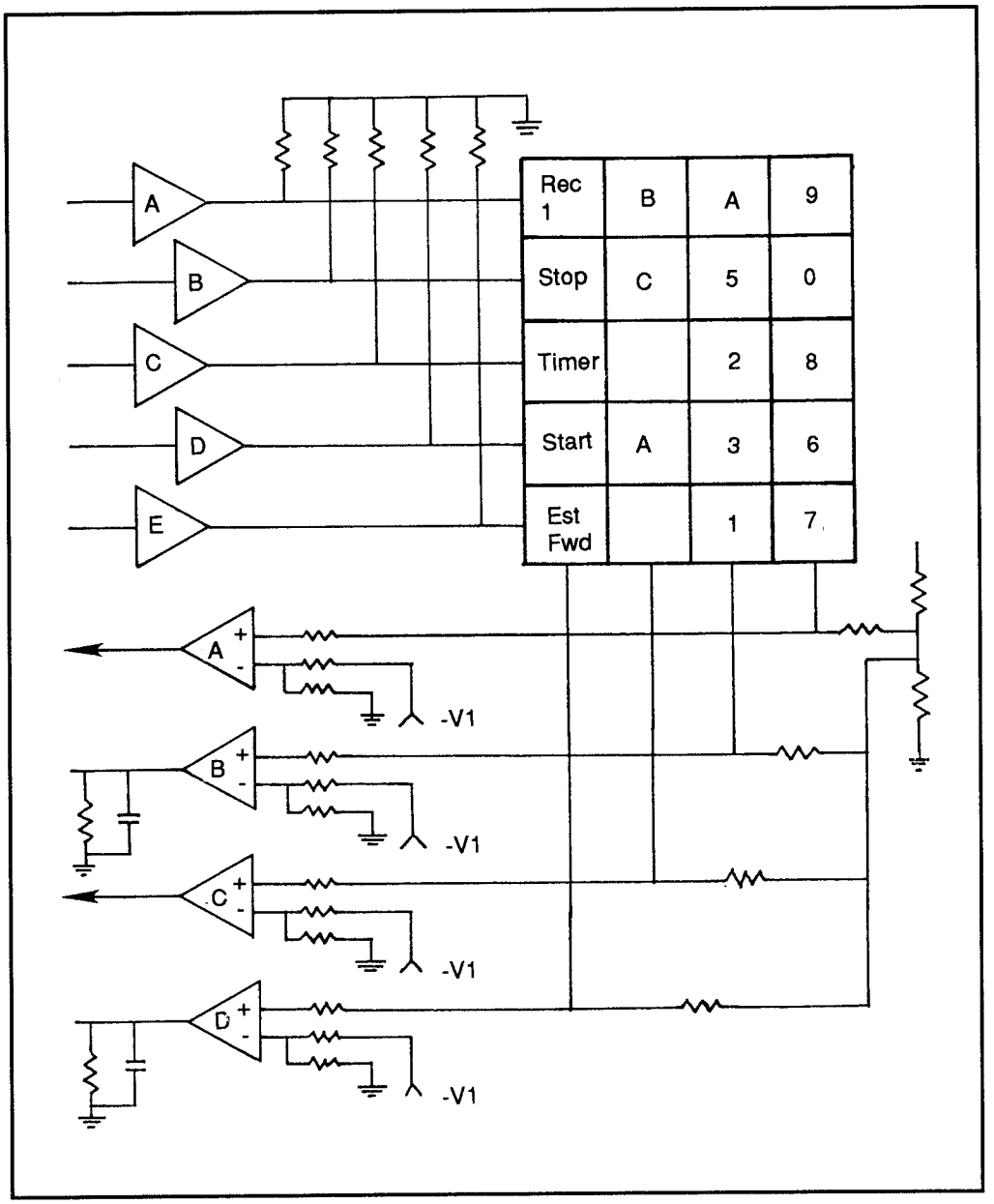

Figure 2: Interrupt connections to keyboard

Most other testing requires either the specific service manual or some good guessing. For example, you may be able to trace the wiring responsible for a certain function from the switch to the chip, from the chip to the outlet plug or some other combination.

Fuzzy Logic

Fuzzy logic is finding its way into microwave ovens and other appliances. Fuzzy logic stems from the fuzzy set theory proposed by Lofti Zadeh in 1965. It has been only recently that these theories have been put to use. Conventional theories say that an object is either in or out. For example, the numbers 2 and 4 are in the set of even numbers and the number 3 is out. Zadeh's theory allows an object to have a partial membership, which means that an object can be sort-of in and sort-of out. (2.03 is sort-of even). With this, a state doesn't necessarily have to be just on or off, it may also be sort-of on, or sort-of off.

Partial membership then approximates human reasoning and lends itself to automation. Microcomputers can make faster decisions based on sensor data and can be programmed faster if using fuzzy logic. The value of this predicts that fuzzy logic devices will become more and more common in the future.

Sharp Electronics now has available a fuzzy-controlled microwave that, at the touch of a button, can grill, roast, or bake a variety of items such as cookies, bread, chicken, meat, and fish. There are various built in sensors which "talk" to the microprocessor to determine the type, shape, height and quantity of food in the oven. It then automatically calculates the optimal degree of "doneness" and the ideal heating time.

Other options include the one-touch reheating and defrosting button. Humidity and aroma sensors can help decide if the job is done.

Fuzzy Vacum Cleaners

Some modern vacuum cleaners are using fuzzy logic controllers. For example, a dust sensor can be used to determine how much sucking power should be supplied. The sensor's voltage is converted to a fuzzy variable and then the microprocessor determines how hard the vacuum should suck up the dirt.

Fuzzy logic vacuum cleaners are made by Hitachi, Sharp, and Matsushita and can also determine the type of floor surface being cleaned and adjust accordingly. The change in dust flow determines where the dust is coming from. A wood floor, for example, will allow dirt to flow faster than a shag carpet which would release dirt more gradually.

Matsushita uses a 4-bit microprocessor in its fuzzy logic vacuum cleaners. The chip pulses an infrared LED and monitors the output of a phototransistor. As dust passes between the two components, it blocks light and changes the output signal. The fuzzy logic infers and the computer adjusts suction power and then controls the motor fan speed.

Conclusion

Many appliances are becoming available that have electronic controls. Many are microprocessor based (simple microprocessors) and can be easily checked with logic probes, and IC checkers. The service manual for each specific unit will indicate proper test points and levels to be found. Replacement parts can usually be easily obtained from the manufacturer or local authorized service representative. IC component boards for many of these simple appliances must be replaced as a whole. Parts for many of these devices may be found at local electronic stores, but as items become more and more sophisticated, the number of proprietary ICs being used increases.

10/TR
Troubleshooting and Repair

10/TR - ECM
Electronically Controlled Motors

Electronically Controlled Motors

Many devices in the home may have some kind of motor within it. Advances in magnetic materials technology and ICs have led to the rise in popularity of brushless DC motors. To control these devices a variety of linear controller ICs are making many features and advantages of brushless motors available at an economical price.

These IC-based controllers are now offering capability and control at a fraction of the cost of discrete component controls. These kinds of controllers may be found in a variety of appliances, from the smallest appliance to the air conditioning and heating system for your home.

MC33034 Brushless Motor Control

Figure 1 shows an arrangement with an IC and a motor that is capable of controlling a 3- or 4-phase motor. The system can drive a motor in forward or Motor Control reverse; provide dynamic braking control; speed control; or run enable controls. Cycle-by-cycle current limiting, under voltage lockout and internal thermal shutdown protection are also provided.

This IC operates at a temperature compensated for 6.25 V reference power. If there are problems with this type of circuit, most likely it will be in the motor and not the IC. The IC is merely the switching controller for the motor. To test this circuit, try each of the different functions first to determine what works and what does not. If the motor will not turn, or hums when trying to turn but does not turn, the motor is bad and should be replaced.

It is possible that the IC is at fault. To check if the IC is causing the problem, try the motor without the IC connected and power each of the windings separately. If the motor works without the IC connected, chances are good that the IC is at fault and should be replaced.

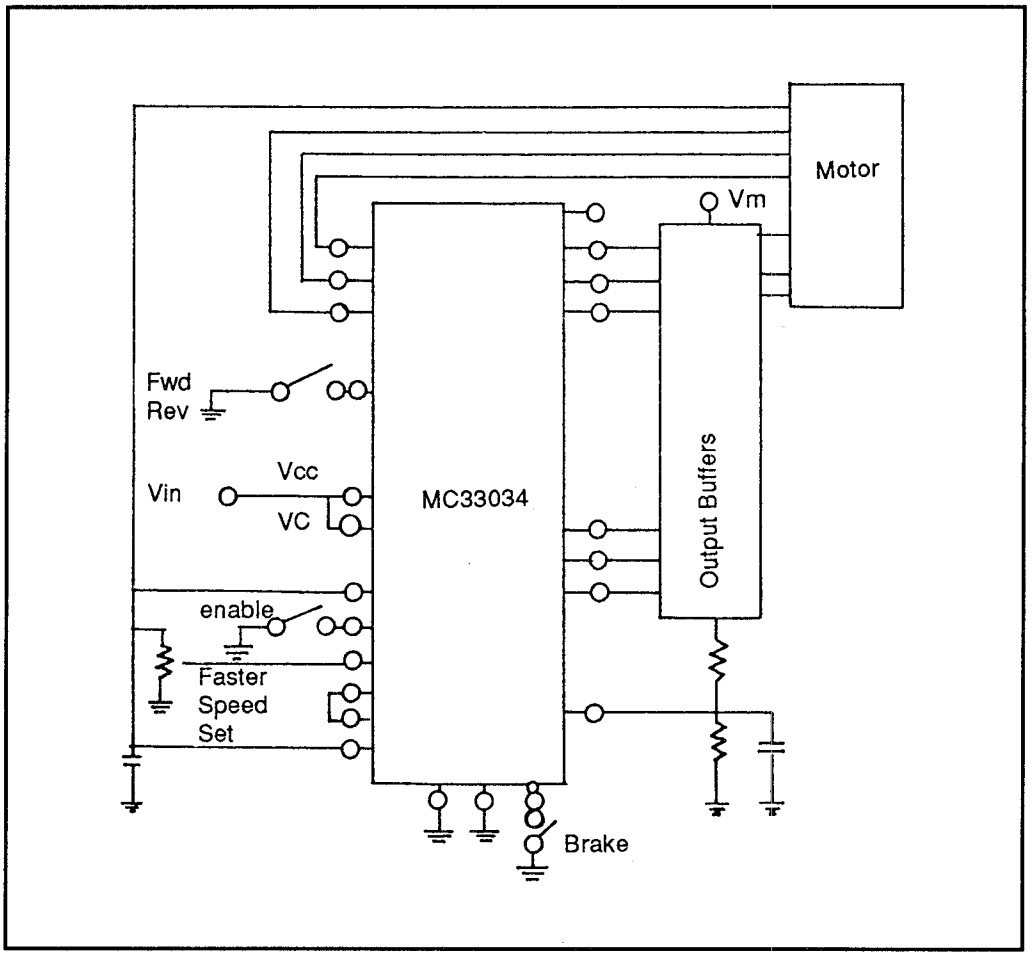

Figure1: MC33034 IC controller with motor attached

The MC33035 is a high performance brushless DC motor controller that contains all of the active functions of the MC33034. It also allows the user to select 60/300 or 120/240 sensor electrical phasing and access to both inverting and noninverting inputs of the current sense comparator.

Phase controlling can offer some additional faults that will need to be checked completely before replacing either the motor or the IC. Check (as before) all functions and the motor isolated from the IC before replacing.

TDA1085A Universal Motor Speed Controller

At times a motor must be able to operate at variable speeds for different applications. A simple version of this would be an oscillating fan that must be able to operate at three different speeds to allow different amounts of air flow. One way to control the motor speed is with a chip. The TDA1085A is one such IC that would be able to control either an AC or DC motor in an open or closed loop configuration.

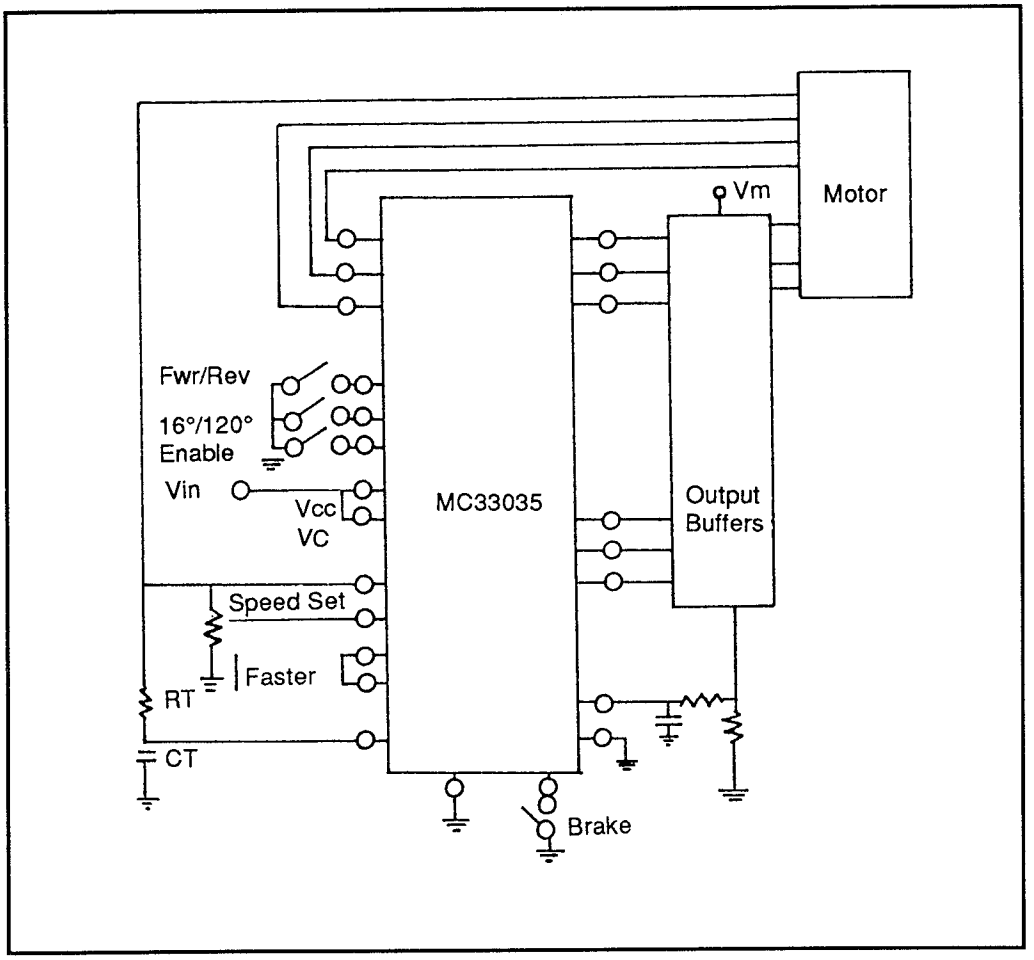

Figure 2: MC33035 IC controller hooked to a motor

The TDA1085A is shown in Figure 3. In this configuration the IC allows the device to operate in one of three different speeds. Bypassing the IC and checking the motor with current hooked directly to it will determine if either the IC is the cause of the problem or if the motor itself is the problem. The TDA1085C is similar to the TDA1085A but is found more often in commercial washing machines. This chip, and others similar, can also be found in a wide variety of applications.

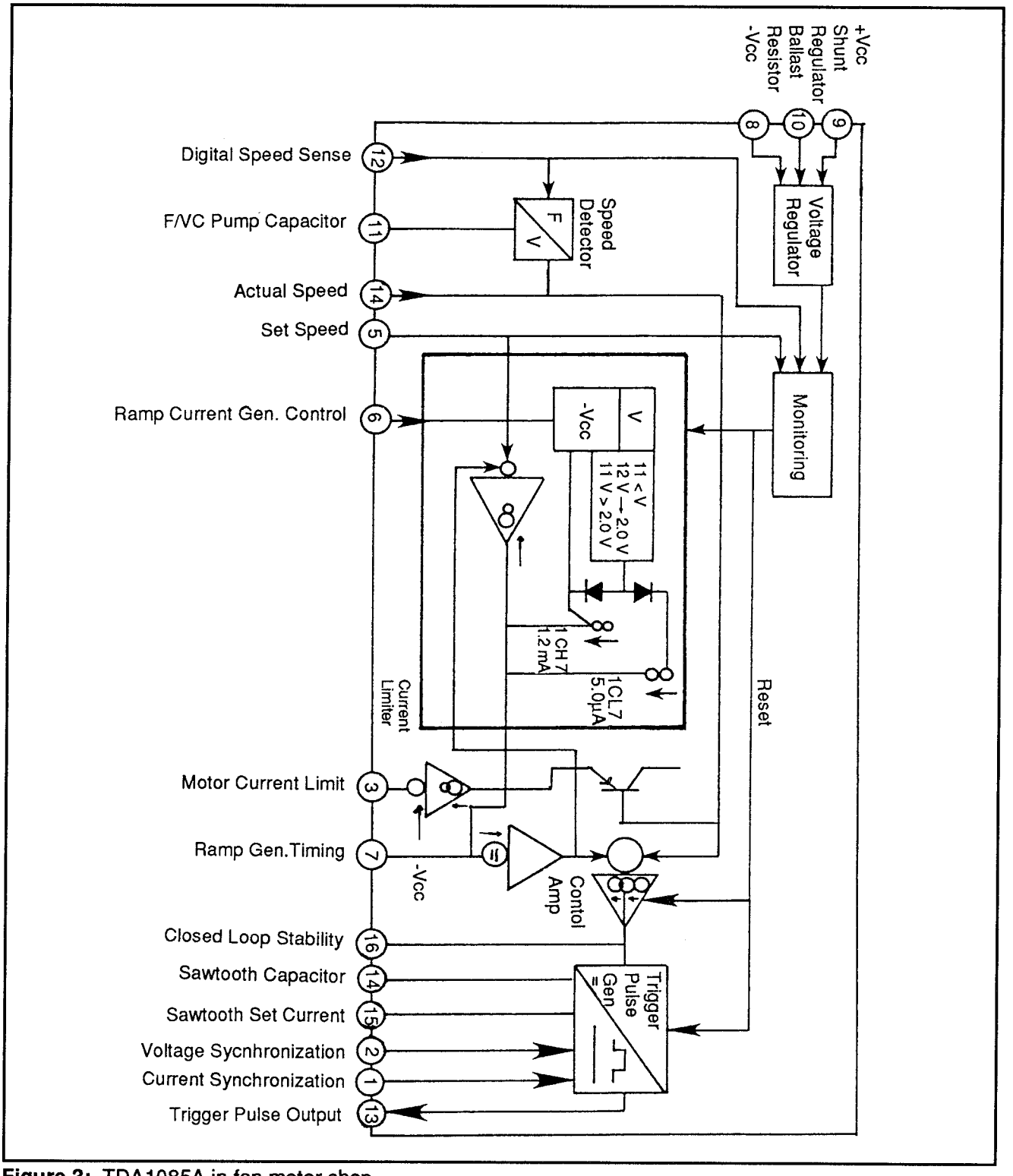

Figure 3: TDA1085A in fan motor shop

10/TR
Troubleshooting and Repair

10/TR - T
Transformers

Transformers change one value of voltage and current to another. In most appliances in which transformers are used, the component will step-down (reduce) the voltage from the standard 120 VAC to values such as 18 or 24 VAC.

Testing

Testing the transformer can be done in several ways. While in-circuit, the DMM is used to test for voltage coming to the component and for voltage coming out. Out-of-circuit, a DMM set to read resistance should show very low resistance in a winding, and an infinite resistance between windings (i.e, between the primary and secondary windings). Specific tests as they apply in practice are detailed below with the examples given.

Probably the most common use, as far as household appliances are concerned, is the doorbell.

Electronic Doorbell

A typical low voltage application is that of a doorbell circuit. Figure 1 shows the circuit hookup for an electronic doorbell hooked to a home. Troubleshooting and repairing such a device is straight forward.

First make sure that voltage is getting to the transformer and that it is coming out. Input will be the standard 120 VAC nominal. Output will generally be between 14 and 24 V but may vary. The actual output value is rarely critical as far as testing the transformer is concerned. If there is an output voltage across the secondary, the transformer is probably performing correctly.

Next ensure that power is getting to the doorbell switch, and that it is coming out when the button is pushed. To test for power coming to the switch, simply check across the wires on the input side. If the transformer is supplying voltage but none is found at the switch, you know that there is a break in the wires between the transformer and the switch.

To test for power on the output side of the switch, test across the wires when the button is pushed. A voltage reading should be present. If voltage gets to the

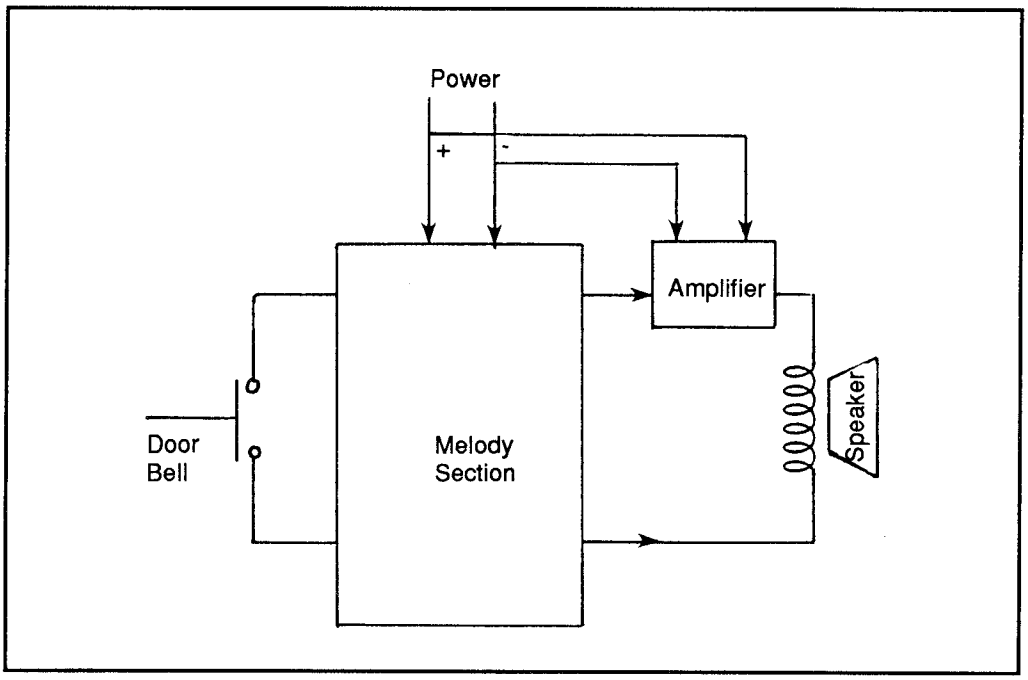

Figure 1: Electronic doorbell circuit arrangement

switch but doesn't go through when the switch is pressed, the switch is bad and must be replaced.

Next test for voltage at the doorbell itself. You should get a voltage reading at the doorbell input of the same value as was output at the transformer. If you don't, there is a break in the wire between the switch and the doorbell.

If power is getting to the doorbell device but it is not working, something is wrong with the doorbell. This could be a unit failure or could simply mean (if it is an electronic device) that you haven't selected one of the programmed tunes or chimes. If the unit has failed, you will probably have to replace it as a whole. These devices are usually single chip (IC) driven, and it's somewhat difficult to find just the replacement chip. You can, however, test the chip.

Figure 2 shows a simple melody doorbell based on the UM3482A chip. This chip has twelve different songs built in with no provision for adding more. It is a multi-instrument melody generator using the newest ROM CMOS technology. The chip is designed to play melodies according to preprogrammed data. The data is placed into the ROM memory during the manufacturing process. Because of this configuration, information is permanently stored internally and does not

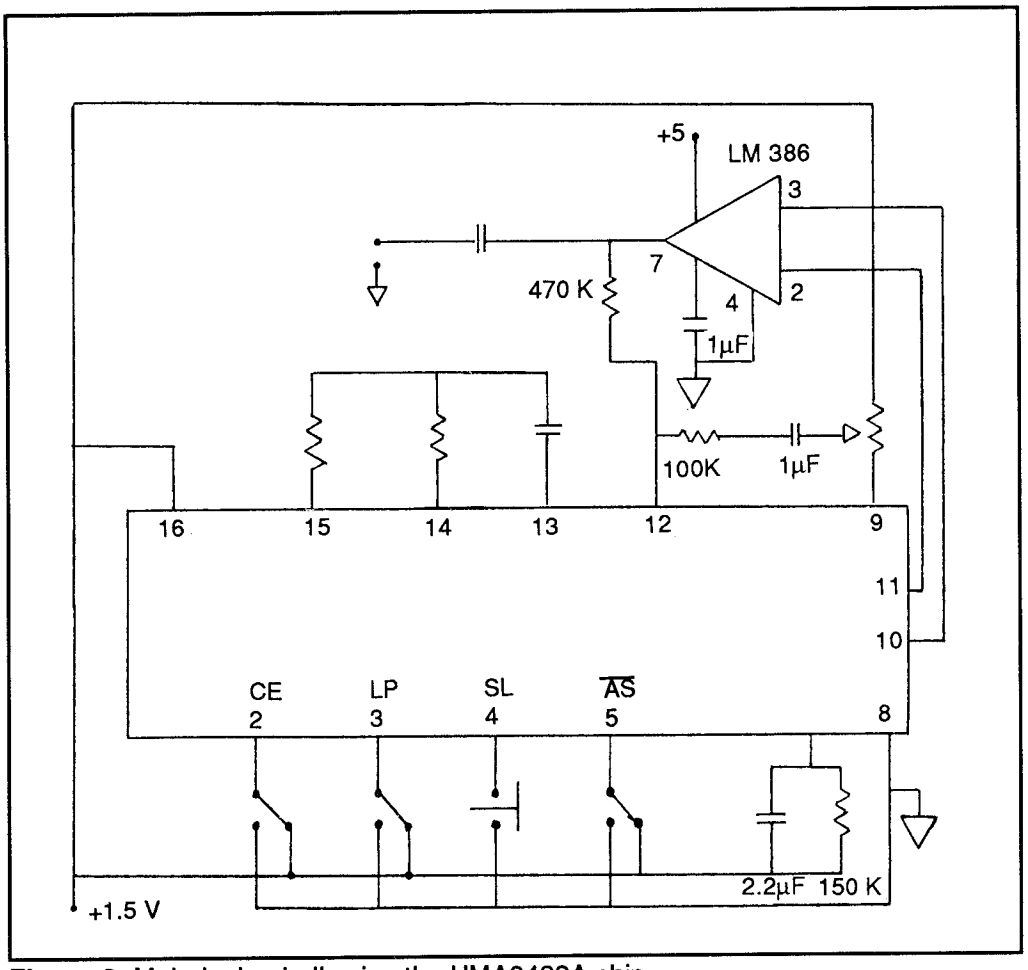

Figure 2: Melody doorbell using the UMA3482A chip

require CPU support to reload this information every time power is removed from the circuit. The internal storage is in 512 seven-bit words with three instrument sounds (piano, organ and mandolin).

To test the IC, a logic probe can be used to check the states at the various pins. Figure 3 shows the logic that can be found at the pins.

If the voltage for the IC checks out OK, but the logic does not, suspect the IC is bad and replace it (if you can find a replacement chip). If the power is correct and the IC logic seems fine, suspect that the speaker and/or amplifier sections are not functioning properly.

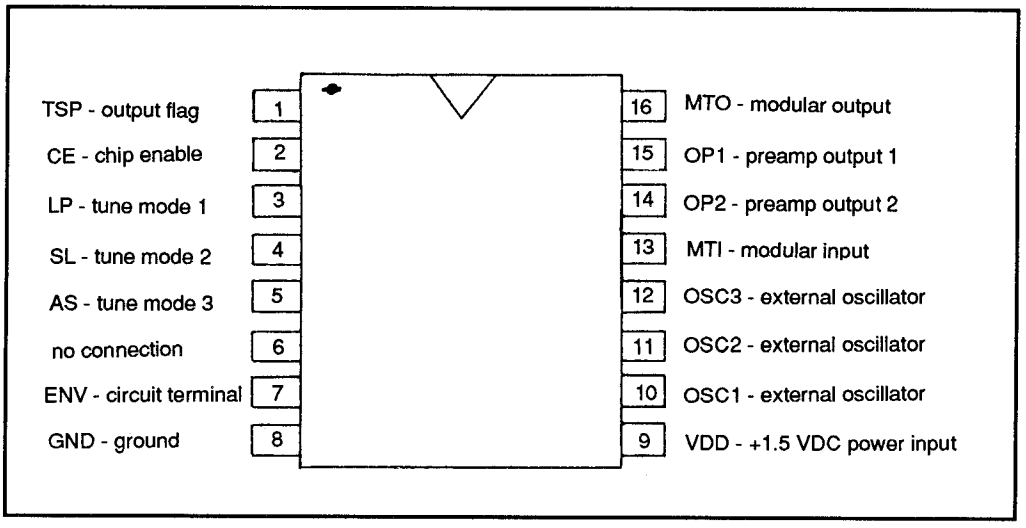

Figure 3: Logic on the UM3482A doorbell music chip

10/TR
Troubleshooting and Repair

10/TR - Th
Thermostats

Thermostats are used in virtually every appliance (and in many other places) where heat or cold must be controlled. Most work on the same basic principle, which is that different substances expand and contract at different rates when the temperature changes.

Bimetallic Strip

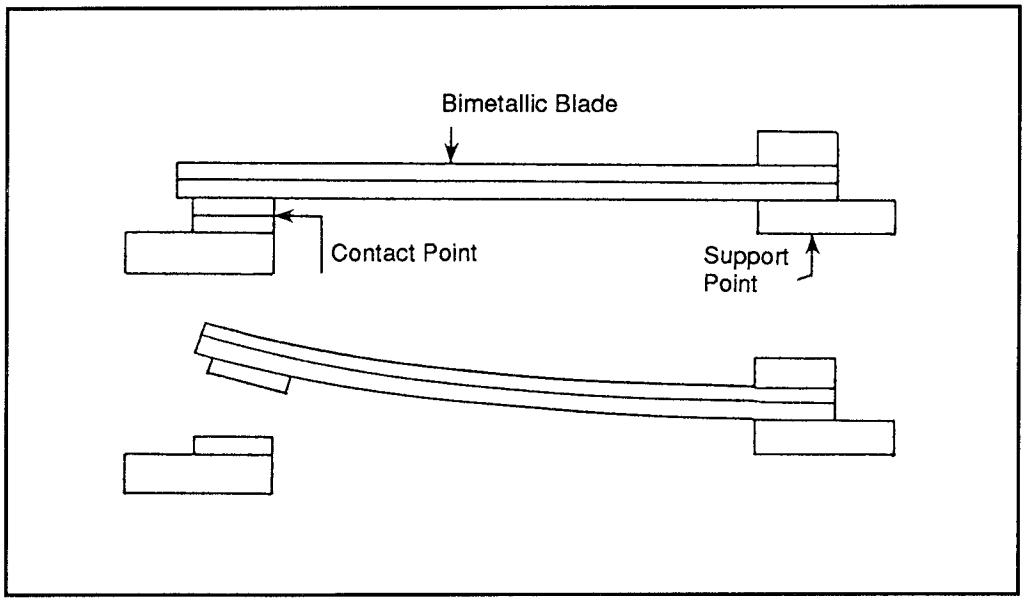

Figure 1: A basic bimetallic strip

The most common form of thermostat is a bimetallic strip. In this two thin strips of metal are bonded together. As the temperature changes, one expands or contracts faster than the other. Since the two strips are bonded, the result is that the strip is warped, it bends. As it does, an electrical contact is made or broken.

For example, as the temperature rises inside your home, the metals of the bimetallic strip expand — one faster than the other. The strip bends and makes

contact. This trips a relay which in turn starts the compressor of the air conditioner. As the temperature lowers, the metals contract. Eventually the strip snaps back and away from the contact, and the air conditioner shuts off.

For appliances that provide heat, the action is usually reversed. That is, instead of being normally open and making contact, the heating-type thermostat is normally closed, breaking contact (and stopping current flow) when the desired temperature is reached.

Heat Coil Thermostat

Somewhat similar is the heat coil thermostat. Instead of being in a strip, the metal is in a coil. With increased heat, the metal expands and the coil presses outwards. Quite often this outward expansion is used to physically move a switch. One common example is the mercury switch. The mercury is inside a small tube. As the tube is tilted, the mercury slides from one end to the other which makes or breaks electrical contact.

Thermistor/ Varistor

A variation on the thermostat are the thermistor and varistor. Both are electronic solid-state devices and both are sensitive to changes in temperature and voltage. For heat sensing, as the temperature changes, so does the internal resistance of the device. This in turn is used to control the flow of current. Exactly how depends on the unit involved. It's even possible for the heat sensing device to be built into an IC (rather than being separate from it).

Thermocouple Device

Still another option is to use a thermocouple device. In this case, heat applied to the thermocouple generates a small electrical current. This current can be used to active a relay, to trigger an IC or other circuit.

Heat Sensing

Some thermostats are preset. That is, they are made to work at a predetermined temperature. Many warming plates and most coffee makers are like this. Other thermostats can be adjusted so that the operator can select the temperature at which the thermostat triggers the circuit(s).

However the method of the heat sensing, and however this is used to control the appliance, the thermostat device acts like an automatic switch. It is tested as a switch.

Testing

The first step is to determine if the thermostat is normally closed or normally open.This can be easily deduced by what the thermostat is supposed to control. In most cases, the thermostat will allow the flow of current until a determined temperature is reached. This is the case in virtually everything that is meant to supply heat. Again, such a thermostat is normally closed. The contacts touch and allow current flow until the set temperature is reached. Contact is then broken, and current flow stops.

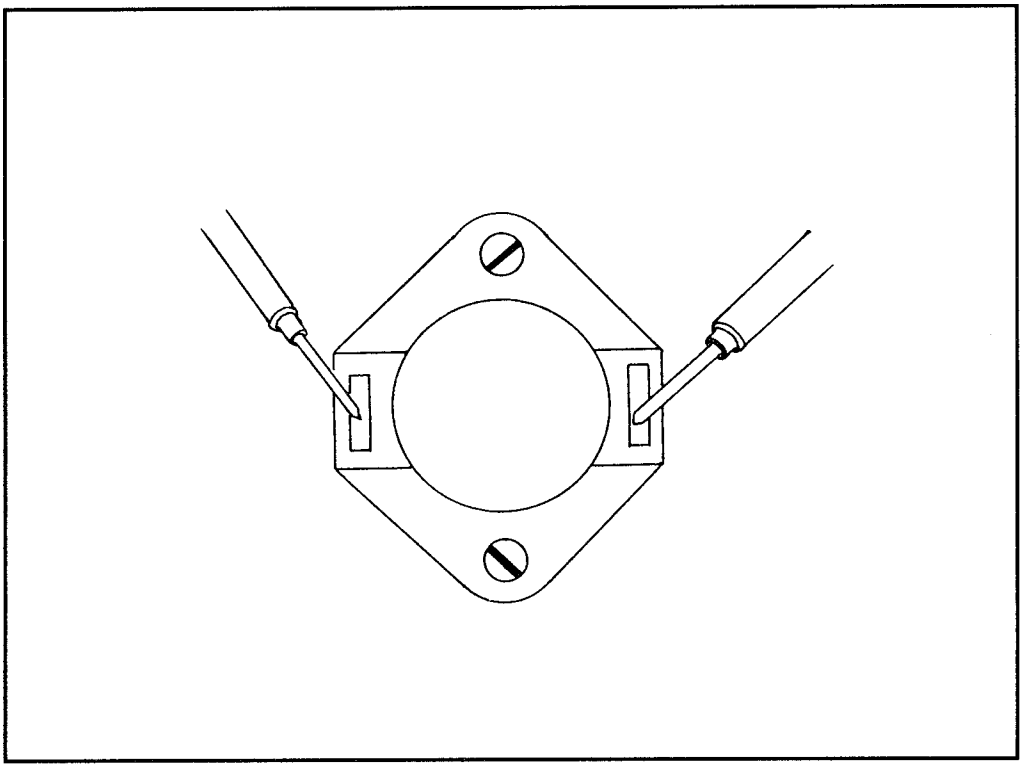

Figure 2: Testing a thermostat

To test a standard thermostat the DMM should read almost 0 Ω when the appliance is off, and infinite resistance when the appliance reaches the set temperature. The opposite is true with the normally open thermostat. In this case, the reading will be infinite normally, and near zero at the set temperature.

Table of Contents

Section 11
Miscellaneous Devices

Table of Contents

11/A *An Introduction*

11/C *Copier*
- **11/C - A** *An Introduction*
- **11/C - TR** *Troubleshooting and Repair*

11/F *Fax Machine*
- **11/F - A** *An Introduction*
- **11/F - M** *Maintenance*

11/Tel *Telephone*
- **11/Tel - A** *An Introduction*
- **11/Tel - TE** *Test Equipment*
- **11/Tel - TR** *Troubleshooting and Repair*
  - **11/Tel - TR - CP** *Cordless Phones*
    - **11/Tel - TR - CP - D** *Design*
  - **11/Tel - TR - SP** *Standard Phones*
  - **11/Tel - TR - TL** *Telephone Line*

Table of Contents

11/A
An Introduction

As this manual was being planned and assembled we quickly realized that many devices fit into more than one section, while others didn't quite fit anywhere.

Since our goal is to be of maximum value to you, both now and in the future, we created this "miscellaneous" section. This allows for an open-end structure to the manual. This section is reserved for items:

- that don't fit elsewhere
- that involve new technology not applicable elsewhere
- which are relatively rare
- which are difficult to fix because of a lack of information from manufacturers, but which deserve coverage.

Concentration in this base manual will be on various business machines like FAX machines, copiers, telephones, etc. Other items of interest will be added in future supplements. As always, we welcome your input. In this particular case, we especially invite any technical information you can share concerning items about which data is difficult or impossible to obtain. (This does not mean "trade secrets", but simply the solid technical data needed by the technician in the field to diagnose and repair malfunctions.)

11/C - A
An Introduction

Copiers, fax machines and laser printers all have one thing in common: they convert images to print by means of a drum and toner (and perhaps developer) system. Copiers and fax machines must convert an image to a digital representation and then return that image to print like the original. Laser printers merely take digital information from a computer and arrange it in a printable format. (Many newer PC-based fax machines do this as well).

Copiers are perhaps the most difficult item to get service literature on. Copier distributors and manufacturers are unlikely to be of help when requesting service information.

First, copier manufacturers do not wish to be liable for any injury that may incur to the untrained technician working on their machine. These machines have many areas across the drum and fusing elements that have very high voltages. The untrained person risks great danger.

Warning

In fact, this information is given to you both for your own safety, and as our own disclaimer. Working on a copier can be extremely dangerous. You do so at your own risk.

Second, copier information and design is proprietary information. Only a qualified (through factory authorized training) individual may be permitted to work on these items. These people are usually also the only ones who have access to replacement parts.

To become a factory authorized repair person requires being trained at one of their service centers and/or working for their company. Some copier manufacturers offer a general, broad-based copier training course that the general technician may take for a fee. This course can give the general technician the required background to do enough repair work on copiers for the most common repairs. The course includes generic diagrams and schematics to aid in the understanding of copier functions. This can then relieve them of some of the liability for any individuals injured.

The more detailed training requires that the technician go to work for the company. Generally he or she must sign a "secrecy" form, and promise to not reveal any of the proprietary information.

Copier Basics

In preface, it was mentioned above that copiers transpose the original image into digital format. This is true only in the most technical use of the word "digital." The image on the drum is created, and held, electro-statically, which means that it uses positive and negative charges. This is the + and -, or the 1 and 0. Do not confuse this with digital technology, but keep the information in mind as it will help you to understand the similarities, and differences, between machines such as copiers and laser printers. These two share certain technologies, just as laser printers and fax machines share certain technologies.

A copy machine takes a "picture" of supplied image, converts that image to a "charged" data image that is transferred to a specially coated drum which is pressed against a piece of paper. The image is then fused to the paper and sent out.

Drum

The drum is a photosensitive device that actually has the mirror image of the original attached (electro-statically) to its surface. These particles are composed of a powder called the toner which is normally black, but could be produced in a wide variety of colors.

Digital Keyboard

All copiers will have some kind of digital keyboard which allows you to input various information about the copy you are trying to make. This information includes how many copies of the original you wish to make, the size of the copy and the contrast level of the copy.

There will be various indicator lights, either on the keyboard panel or status lights located inside the front cover of the copier. These status indicators may be icon based to indicate the particular mode of operation (copying, reducing, error type) to indicators that turn on next to a list of functions.

Paper Input

There will be at least one input for copier paper and one exit point for the finished copy. The paper to be copied onto may either be hand fed (Canon PC-3 copier) or tray fed (Xerox 1040) copier. Some copiers (Ricoh FT6200) have the ability to have two trays with varying sizes of paper (one for 8.5x11 inch and the other for 11x14 inch paper). Professional copiers can handle multiple trays for paper storage, with multiple trays for output which allow for collated copying. Some machines can even staple a finished section together. In addition, some allow the paper to be printed on both sides (for copying double-sided original material).

The original (the item being copied) is placed on the glass document surface with the side to be copied down (toward the glass). The copier than either moves the document glass over a very bright bar light and light reflectance reader, or passes a light bar across the paper with a lens picking up the image. Either way, the image is sent to the drum for printing.

Basic copiers require each original to be placed manually. Many larger machines allow for many originals to be placed in an auto-feed system that either uses a vacuum or various rubber wheels to pull the paper through the copier.

The contrast level control will adjust the difference between the light and dark portions of the image. If there are lines that are very light, or drawn in various colors, the contrast level may need to be set higher so the copier can reproduce the image. The result is sometimes an over-blackening or smudging of other portions. Similarly, if the darker portions are set for more accurate reproduction, the smaller, lighter lines may disappear.

Paper

Paper made for copiers is different from standard bond paper. Copier paper is thinner and is also more slick. These characteristics help it to move through the copier more easily and help to reduce the amount of paper dust left behind. Except for older copiers, you can successfully substitute bond paper. Copiers designed to handle bond paper are often referred to as "plain paper" copiers. These are becoming more and more popular. You can select the kind of paper on which the copy will be made. Making copies of a resume on the slick-type copy paper is much less appropriate than having it copied onto a nice cotton bond paper. Or a copy may require the use of a pre-printed letterhead.

To reduce the amount of dust that gets into the copier, and thus reduce both the maintenance and malfunctions, paper should always be stored properly. This begins by keeping the paper dry and away from contaminants.

It's important to keep the paper dry, but this simply means that it shouldn't have excess moisture. Heat can cause the paper to become too dry. This will allow it to pick up too much electrostatic charge. Under the best of circumstances the paper can pick up a charge from the drum, causing the sheets to stick together. If the paper is overly dry this tendency increases.

You must also be sure that it isn't damaged. Paper that is curled or is in some other way bent, kinked or folded will most certainly result in a jammed copier and poor image reproduction.

The paper should be on a flat surface. Although it's okay to stack reams of paper, never lay any heavy objects on the paper. This can cause bends and creases in the paper which can later make the paper useless for the copier.

Toner

For a copier to produce an image, it needs a powdered chemical called toner. This product is continuously replaced with each copy made. Unused toner is never returned to the original container. Once toner has been in contact with the drum or any other surface in the copier it is considered spent and cannot be used again.

Toner is a heat-sensitive chemical. It is fused to the paper by means of heating elements and rollers which literally press the toner to the paper and melt it into the paper fibers. (Feel the paper coming out of the copier. It will be warm.)

Only factory authorized toners should be used in copiers. A poor example of this is where a customer was using toners created by a third party for his Xerox 1040 copier that was "supposed" to be as good as the real thing. After using the product for a short time, the machine began to malfunction. He had to call (and pay for) the Xerox service technician to repair his machine. He was told the product being used was not a proper mix for the particular machine and that the drum, toner and developer (for this machine) would need to be replaced. The little he saved ended up costing him hundreds of dollars.

Wherever you purchase your toner, be sure to store it in a cool, dry, dark place. When loading the new cartridge, take care. It's all too easy to have the powder fall out.

If it does fall out, gently sweep it up. Do not try to wash it up with a wet rag, especially if it has fallen onto carpet. When it is wet, it has a greater tendency to smear.

Developers

Developers are used in some copy machines in conjunction with toner to produce an image on paper. The developer and toner work together in a similar fashion to the way developer and fixer work in printing pictures. One cannot work without the other in copiers requiring a developer.

Developers are replaced less frequently than toners. They are replaced when the drum is to be replaced, which means that the owner usually doesn't have to worry about it. If it is used, the developer must be stored in the same manner and conditions that paper and toner are stored.

11/C
Copier

11/C - TR
Troubleshooting and Repair

Misfed Paper

Paper for copiers is fed through a series of friction wheels (pinch rollers) and fuser rollers in a twisting, curving path before exiting a copier. On occasions, paper will become jammed in the copying process. When this occurs, various sensors located throughout the travel path sense the papers location. If the paper does not pass these sensors in a prescribed time, the copier alerts the user and shuts down the copying process.

Most often the paper misfeed will be found at the entry point. A part of the reason is that sometimes a "misfeed" signal will result from an empty paper tray, or from a tray in which too much paper has been loaded. In either case, the paper problem will need to be fixed.

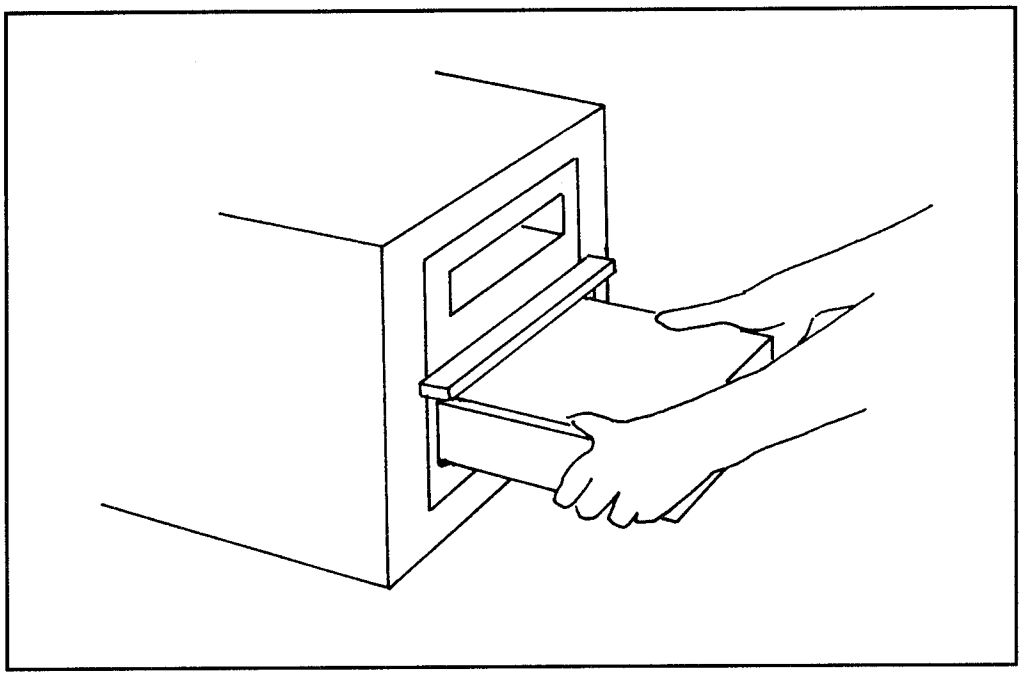

Figure 1: Before suspecting the copier, inspect the paper tray.

Remove the tray and ensure there is paper present. Next see if there is any paper protruding from the copier. If there is, remove the paper and replace the tray. The front cover on many machines will need to be removed to reset the copier sensors so copies can continue to be made.

If the problem was not found at the paper cassette entrance, the misfeed might be found within the copier. Most copiers will have a handle that is lifted or pulled to remove the fusing section and travel path for the copier. Do so and check the travel path for any paper, or paper pieces. Be careful when touching any part of the fusing section. This area generates a large amount of heat and current, needed to fuse the paper before exiting. Also, touching the drum and some other parts with your fingers can cause damage.

On larger copiers (Ricoh FT 6200, for example) the paper travel path is longer than a smaller copier (like the Canon PC-1). The front cover will need to be opened and the turn guide unit removed. This will be seen (in the FT 6200) as a bright orange square with a large handle attached. Pull it out and remove any paper found in the turn guide section.

Larger copiers may have reset buttons that need to be pressed before the unit will allow any further copying. On smaller copiers (Canon PC-1, Xerox 1040, Sharp

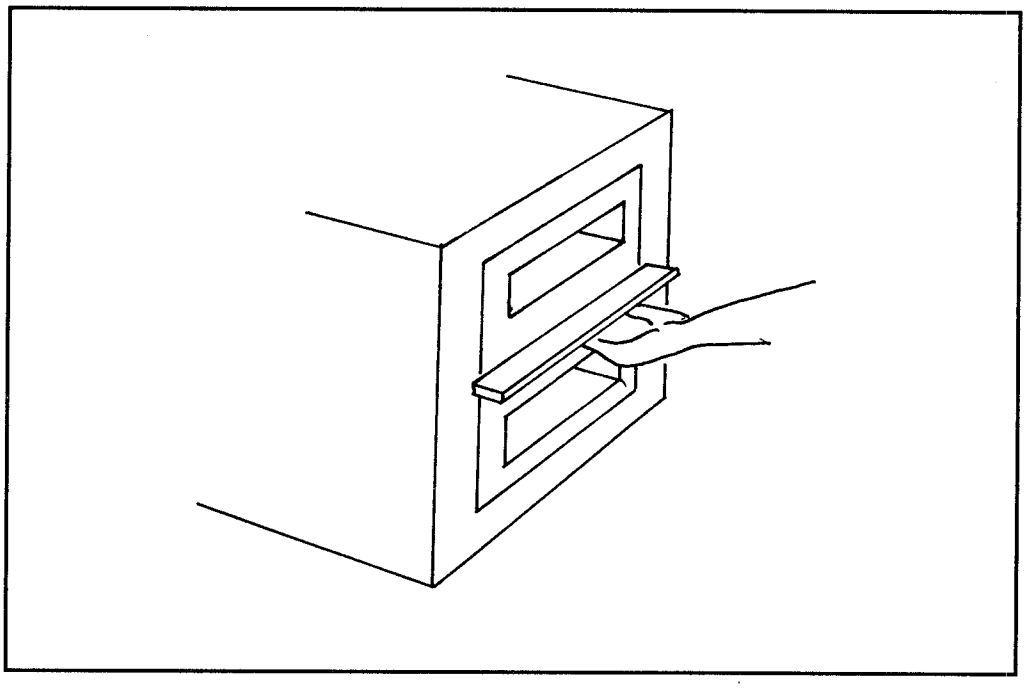

Figure 2: Access to the paper path

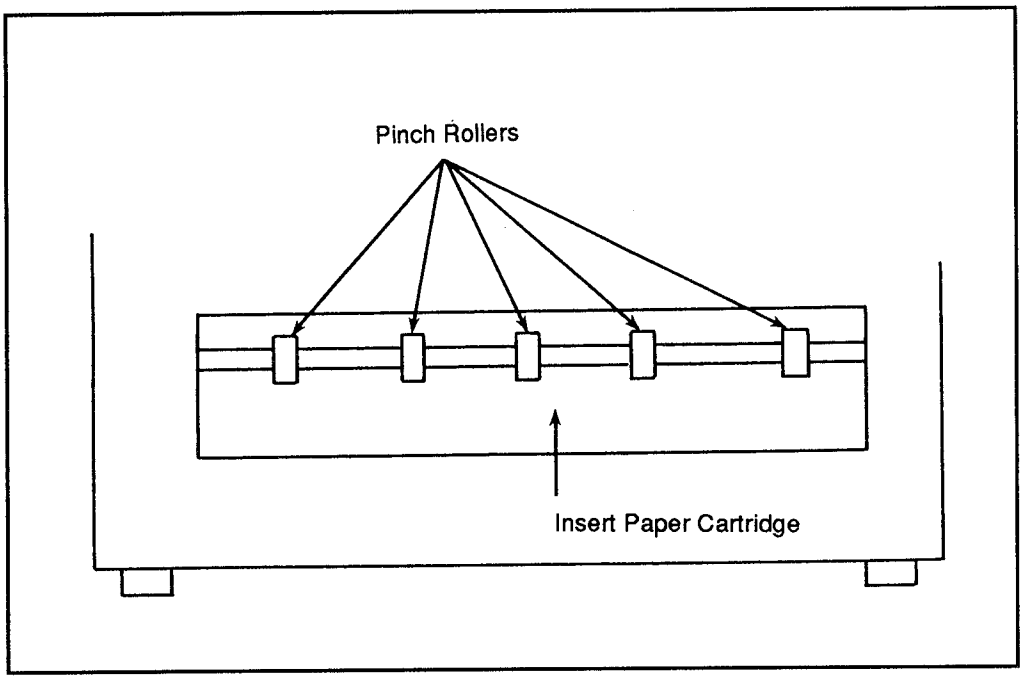

Figure 3: Inspect the copier pinch rollers for wear.

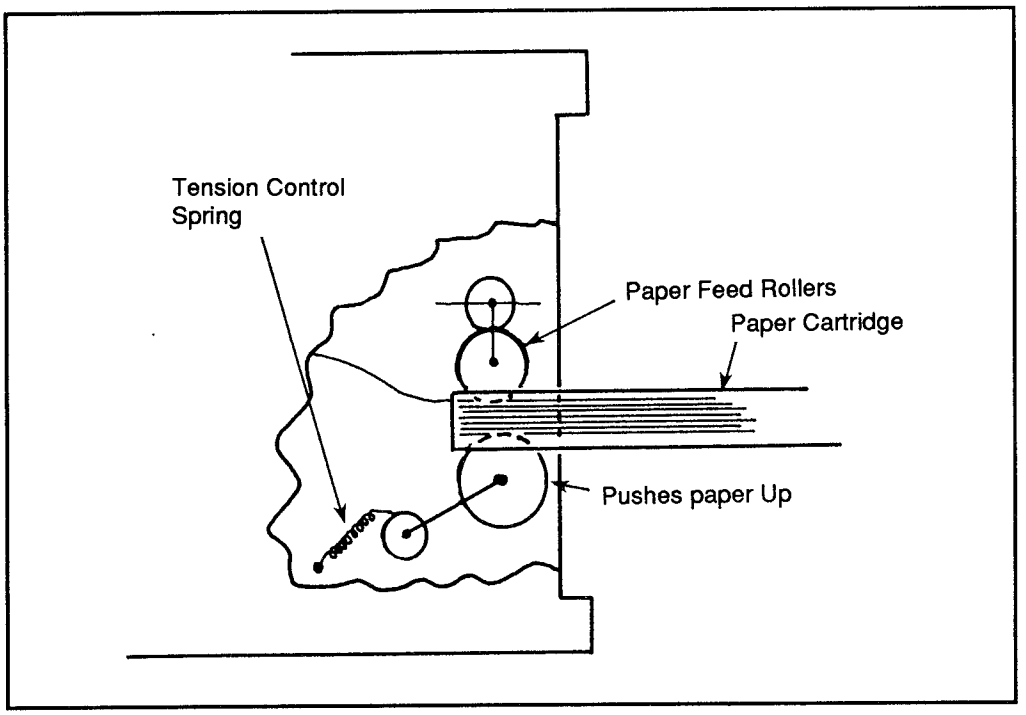

Figure 4: Tension control adjustment

76, etc.) the reset happens when the front cover is opened and closed, or when the fusing section is replaced.

Frequent misfeeds can be the sign that there are more advanced problems. Paper that continuously jams at the tray may mean that the paper is bad, that the pinch rollers that grab the paper are bad, or that the tension for the pinch rollers is not set properly. In any event, try replacing the paper with a fresh batch before tearing the unit apart, or calling a service repair-person.

If the misfeeds continue, first suspect there is a problem with the pinch rollers. These rollers grab a single sheet of paper and pull it into the machine. If they become worn or broken they cannot properly grab the paper. In either case they will need to be replaced. Order new parts from the local authorized dealer.

If the tension control is set wrong, the paper may not be grasped properly and can cause misfeed. This will usually be indicated by the paper not leaving the tray and a slipping sound when the copier tries to pull a sheet of paper out of the tray. Most of these tension controls are spring controlled. Adjusting the tension of the spring can control the grasping power of the pinch rollers. Too much tension, however, can cause more than one sheet of paper to be fed into the machine or cause some other form of jamming to occur. Adjustment must be made carefully and a little at a time. Adjust until paper is fed correctly.

Printing Does Not Occur

Most copiers require a warm up period. Trying to make copies before the machine is ready will give poor results at best. Chances are, the machine won't work at all. (Most will have a "Ready" light to indicate when the copier has completed the warm-up.)

There will be indications that this is happening. Lights may come on (including a "Wait" light). You will usually hear sounds from inside.

If nothing at all happens, begin with the most obvious. Is the unit plugged in? Has it been turned on? Look for status lights. If there are any, the unit is at least plugged in. It's possible that the unit is getting enough power to drive the lights and nothing else, but this is unlikely.

Accessing the power supply section may be difficult. If it's possible to get inside, you can perform the usual visual checks to see if any fuses are blown, and the usual DMM checks to find if power is actually getting to the unit, if power is coming out of the supply, etc.

Quite often the status lights will give you a good indication of which area is not

working properly. These indicators may be in the form of lights alongside words, LED-type words or as icons. For example, if the copier is out of paper you may see a light come on next to "Paper Out," you might see those words light up on the status panel, or you might see an icon that represents sheets of paper.

In the case of icons, it's not always obvious what they mean. You may have to turn to the copier manual.

One of the most common "errors" that will prevent printing is the "Paper Out" indication, with "Add Toner" being a close second. Most of the time the indicator means just what it says. You have only to fill the paper tray or replace the toner cartridge to fix the problem. (Note that you will probably have to wait through the warm-up period again.)

Other times the indicator can mean something more serious. For example, if the "Paper Out" indicator comes on yet there is paper in the tray, for some reason it is not feeding into the machine. (See "Misfed Paper" above.) A visual inspection will probably show you where the problem lies.

"Check Paper Path" indicates that there is a piece of paper stuck somewhere within the unit. This icon may look like a number "8" with a "Z" on its side. Locate the kammed paper, remove it and try again. If the problem occurs again, try a fresh batch of paper (preferably from a new ream). If it still happens, it's mostly likely that something in the paper path is causing the paper to jam. This could be anything from some physical obstruction (which includes general dirtyness), worn or damaged rollers or a paper that has caught in the exit.

If Service indicator lights (a common icon for this is a picture of a little mechanic) you will need to call the customer service representative. This indicator tells that something more serious has happened. If a visual examination doesn't reveal the cause, there is little that can be done without the service manual for the machine.

Poor Copies

Poor copies can occur from a variety of problems. The most obvious is that the original may not be as clean as required, or is so thin that light is passing through the item if the cover is not closed when copying. (The copier cover offers a 100% white background for originals when being copied and should be used whenever possible.)

The next most common problem is a dirty platen cover or exposure glass. This could be due to visible stains or less visible smudge marks from fingers and hands. The glass surface must be kept clean to ensure proper copying. Clean the glass with a soft rag and glass cleaner. Both sides of the glass may need to be

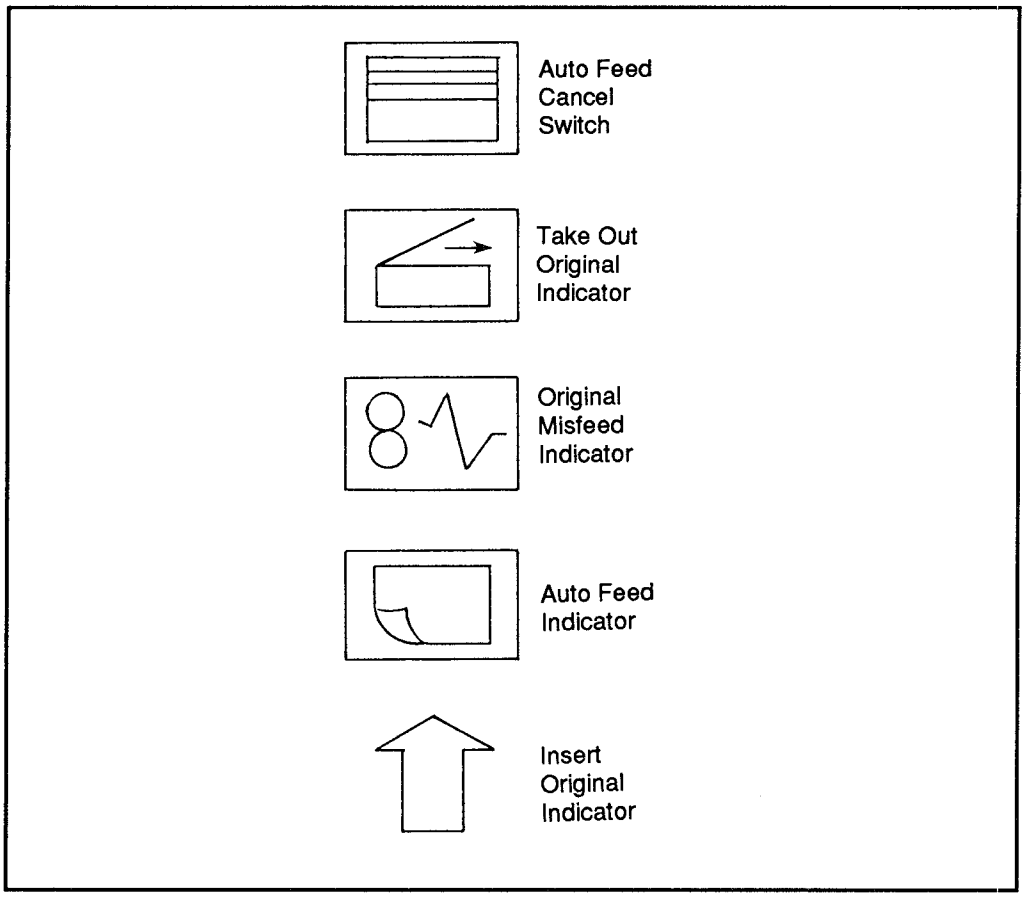

Figure 5: Some common copier icons

cleaned, especially in those copiers that the document glass moves to make copies. The document glass can usually be slide far enough in both directions to allow the cleaning of more than half of the glass.

Some copiers (like the Xerox 1040) have a release catch found behind the front panel at the top right. Moving this catch allows the document glass to slide further than normal in one direction or the other for cleaning.

In some copiers, there may be a number of small long rectangular windows through which the light must pass before the final copy is made. These can be found after opening the front cover. Each of these windows can be removed from the copier for cleaning. Refer to the operating instructions for the placement of these windows (if present) for your particular copier.

Another common cause of poor copies is a poorly set exposure level setting. This can cause the copies to be too light, too dark or even muddy in appearance.

On the control panel can be found a selection that may allow automatic exposure and/or manual settings. If poor copies occur with the automatic exposure set, try setting the exposure to manual and choose an appropriate level. This may require some experimentation.

Streaking or lines within the copy can be caused by dirty travel paths, old toner/developer, or a drum that is beginning to fail. Clean the travel path first, then try making a copy again.

Next, inspect the drum for any lines or marks that should not be present. A new drum should be shiny, very reflective (almost like a mirror), and very smooth. If there is stray toner on the drum, it can be wiped off with a good optical chamois or other very soft cloth.

If the drum appears to be OK, replace the toner and/or developer. Run several copies through the machine to see if the problem has been fixed. If not, the drum is probably bad and will need to be replaced.

The problem of poor copies could be caused by sections of the copier (other than already mentioned) that may not have been suspected before. Copies that come out of the copier smeared, or with the toner falling off indicate that the fuser section is not operating properly. One of the heating elements is probably burned out.

Each of the fuser heating elements may need to be pulled and checked. How this is done depends on the specific make and model but the method of removing them is usually fairly obvious. Bear in mind that there is a potentially very high current in this area. It's best to unplug the copier before attempting any work in this area.

The fuser heating elements will usually be light rods that are the width of the fuser section. Each rod may appear as a series of small bulbs, or as one continuous quartz crystal bulb.

The easiest method for testing is to use a DMM and do a continuity check on the element. The reading is not important. Your goal is simply to find if there is a reading at all. Resistance should be low across the element.

The greatest problem you will have is that even if you test and find that the

element is bad, finding a replacement will be difficult and sometimes impossible. You may have no choice but to call an authorized service technician to make the replacement even though you've diagnosed the problem and can easily cure it on your own.

Contrast and Background Adjustments

It is possible, over time, that the adjustment for the contrast and background have changed. Usually there will be at least a contrast adjustment other than the control panel that can be set for the normal contrast level.

On the Xerox 1040, there is a background adjustment and a contrast adjustment. These are located inside the front cover on the copier frame. Here you will find a hole with a plastic flat-head screw adjustment. This is the contrast adjustment. By adjusting the control in one direction or the other you can lighten or darken the copier contrast range. Turn the control in small steps and check copies.
If the background appears too muddy, but the foreground is at the level you like, you can adjust the background adjustment. This adjustment will lower, or increase the overall level of black in the copy, and a balance between the contrast and background adjustments should be met.

Behind the left fold down panel (as you look at the copier from the front) is the

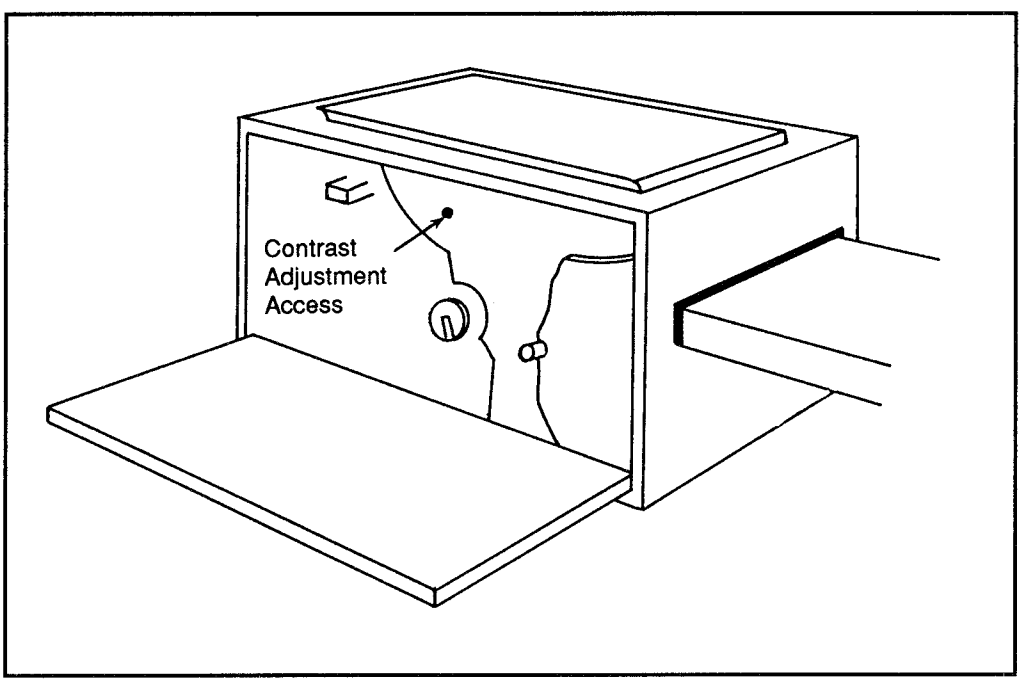

Figure 6: Contrast adjust on a Xerox 1040

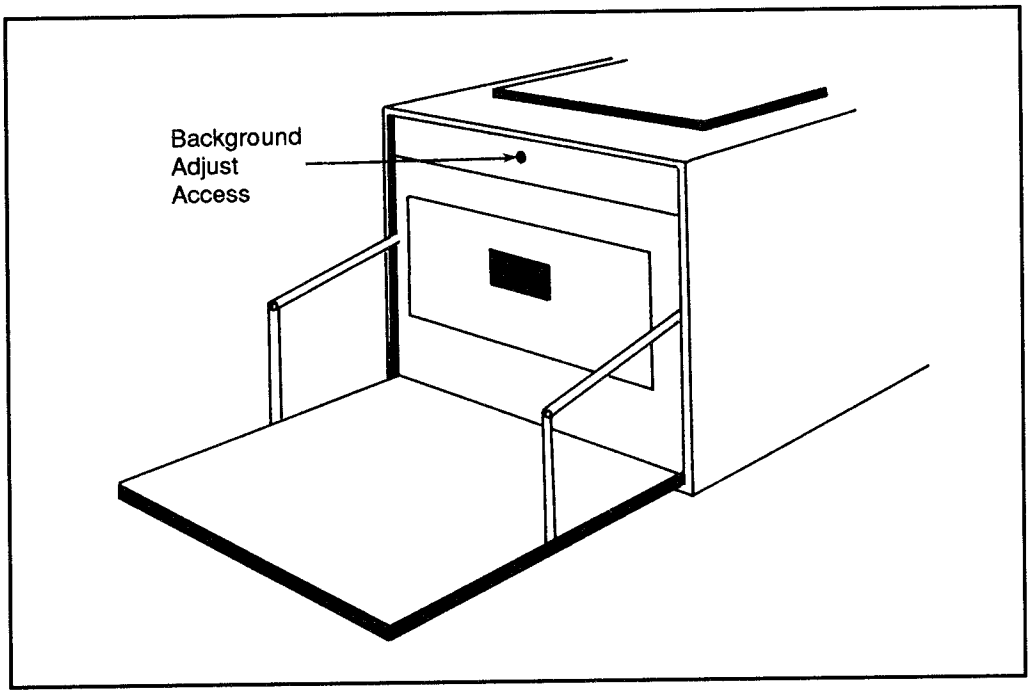

Figure 7: Background adjust

developer loading section. At the top, and near the center will be a small round opening. A small jeweler's screwdriver can be used to access the adjustment here and change the background level. Adjust in small increments in either direction to change the background level. You may have to bounce back and forth between this adjustment and the contrast adjustment to get copies that meet your needs.

Miscellaneous Problems

Various other problems may occur within the copier. If copies always exit the copier as a black sheet, it can be assumed that the main element has gone bad, or that there is a major misadjustment of the contrast and background controls.

Toner can become abundantly scattered throughout the copier and cause the performance of the unit to drop. The copier should be periodically cleaned with a sweeper to remove any miscellaneous toner deposits. Again, using a wet rag or dry rag to wipe up toner may not work and will usually grind the toner into the surface being cleaned or make a bigger mess.

Warning

Always shut off and unplug the unit before cleaning! Any work on the copier without the service manual is a major risk. Voltages within a copier can exceed 600 volts at some points. Not all of these are obvious. Not knowing what is safe

to touch and what is not can be hazardous. If service literature cannot be obtained, either because the information is proprietary or for some other reason, let a qualified service technician handle the work.

As has been mentioned, quite often it is irrelevant if you can safely find the cause of the trouble or not. If replacement parts aren't available, troubleshooting the copier won't be of much help.

11/F
Fax Machines

11/F - A
An Introduction

Facsimile machines, or fax machines as they are referred to today, are considered by most as being a relatively new invention. This is true only concerning the exact technology now being used.

Facsimile Machines

Facsimile machines have been in existence since the advent of the telegraph, and in a more limited way since before this. These early machines where able to systematically punch paper from a fed Morse code that was sent over the wire. The images were crude, but it was the forerunner of modern fax.

Most advancements for facsimile machines came from the needs of businesses, media and police departments who were looking for methods to send pictures across a wire to help speed the information gathering/sharing process. Many of these early systems would have a rotating drum to which a picture was attached. The drum would rotate and the image would be scanned. Each light and dark portion (or variations thereof) were scanned and then transmitted across the telephone and reproduced in a similar fashion at the other end. Over time, advances in technology have led to the invention of the modern, digital facsimile machine.

Fax Transmission

Fax transmissions are rapidly overtaking even overnight mail as the most rapid method for sending printed material. Fax machines can be either stand-alone machines or the less expensive computer-based circuit boards.

In a stand-alone fax machine, the document or other image to be transmitted is inserted. An array of photodiodes scan the image in a manner similar to that of a laser printer. The image is digitally converted into the thousands of dots required to represent the image. The binary pulses are sent over the phone line and are then reconverted to an image (again in a fashion similar to that which a laser printer uses to create an image).

Elements

Most stand-alone fax machines contain three elements:

- the scanner
- the modem
- the printer

Scanning Process

The scanner scans an image on paper and converts the information to digital data. Simple fax machines merely decide if the portion being scanned is a black or a white and transmits this. More advanced machines can decipher different levels of gray to create pictures that do not have to be "line art only" (text or simple lines). Typically these will range from as few as 16 gray levels to 256 gray levels. The higher the number of levels possible defines the clarity available to recreate a faxed image.

Internal Modem

Regardless, the scanned data is transmitted via the fax machine's internal modem. This modem modulates the digital information and sends it over the telephone. The telephone network is an analog device, so the information must be modulated (converted from digital to analog).

The receiving modem does the opposite by demodulating and then reassembling the information into digital information. The text/image can then be printed.

Printer Section

The printer section of the fax is similar to that of a laser printer. The image is created in the fax memory, to be transferred to paper via a rotating drum. The paper is then output as a completed fax image.

PC-based Fax

The PC-based fax unit is a plug-in circuit board that makes use of the computer system's power and devices. It is considerably less expensive because of this. For example, printing of the faxed image is handled by the printer already connected to the computer.

The basic operation is the same. The fax card takes digital information from the PC, converts it to data that can be transmitted over the phone line, and modulates it for transmission. In the receive mode, the incoming data is demodulated, converted into the digital computer language and can then be sent to the printer.

There are some major differences. The PC-based fax card relies on the computer and its connected devices. Since the computer is also used for other purposes besides fax transmission, special software must be loaded for the fax card to operate.

The stand-alone fax unit works with pre-printed material while the PC-based fax unit deals with material already on computer disk. Unless a separate scanning

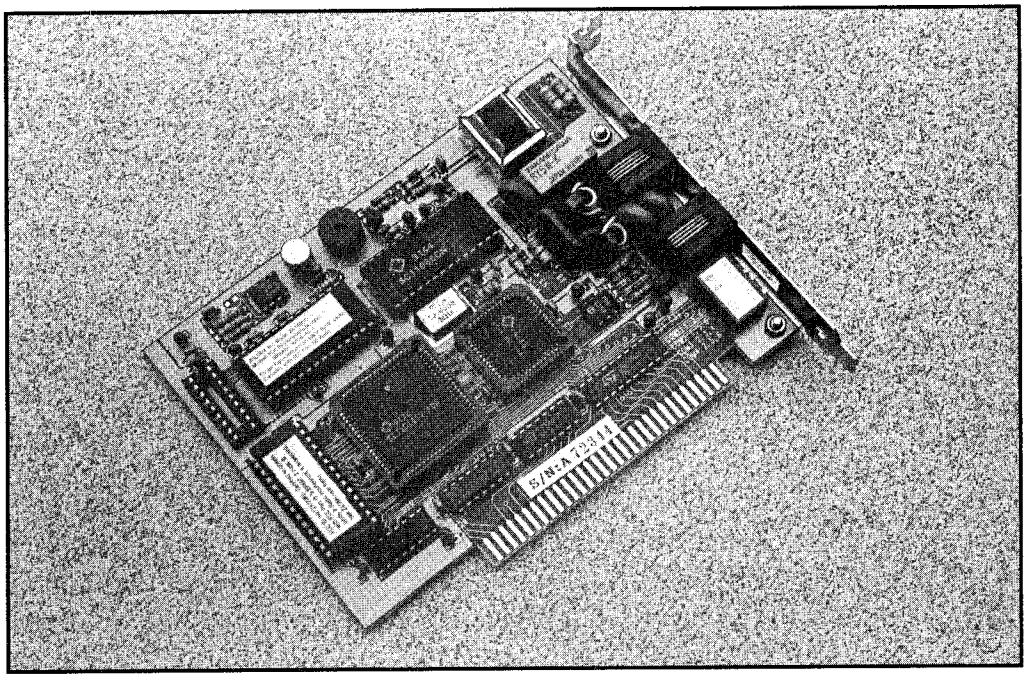

Figure 1: Fax circuit board

device is attached to the computer, a PC-based fax unit does not and cannot send pre-printed material. (It can, however, receive such material and will reproduce the image if the attached printer is capable of printing it.) In other words, the PC-based fax cannot take a sheet of paper and transmit it directly. The page would have to be scanned and converted first.

In essence, the PC-based fax unit is less expensive because it consists only of the center function of a stand-alone unit. It doesn't scan or print by itself. In virtually every case, the circuit board will be a combination of modem and fax.

Someone purchasing a modem circuit board (card) can spend just a little more (usually less than $50) and have fax capability.

11/F
Fax Machines

11/F - M
Maintenance

With prices going down, and manufacturers becoming more and more reluctant to release any technical data, fax devices are going the way of the transistor radio. This unfortunate tendency is that it's often less trouble and cost to replace the unit than to attempt a repair. Once again, even if you manage to troubleshoot the unit, replacement parts are unlikely to be available. This often makes even the effort to bring about anything but the most basic repair a waste of time. If you track the problem to a specific component but cannot get a replacement for that component, you've gained nothing but the knowledge of what failed.

Fax machines are being made by more than forty different manufacturers. Most of these fax machines are created by the same people that create copiers and laser printers. Unfortunately, this means once again that service data and replacement parts are extremely limited because of the manufacturer's stand concerning what they consider to be proprietary information.

Internal Problems

If the fax develops an internal problem, there is little you, as a general technician, can do. Repairs will have to be done by an authorized service center. There are, however, some basic precautions that can be done to avoid the risk of damage to the fax machine.

Fax machines should be located on a stable surface free from vibration. The unit should always be used on a level surface.

Dirt and moisture should be kept from the fax machine. Keep liquids away from the fax. In addition, don't place the fax unit near a humidifier or even an open window.

The fax machine is sensitive to temperatures outside the 41° to 95° F range. Therefore, the fax machine should be kept in an area with no extreme temperature fluctuations.

Original Documents

Original documents affect not only the quality of the images copied and/or transmitted, but also the condition of the fax machine. Documents must be clean and dry. Excessive dirt or moisture on the original as it is fed into the fax machine can cause a build up on the paper-feed rollers. This is guaranteed to eventually cause problems such as paper jams and perhaps complete unit failure.

Each original should be inspected to ensure there is no kind of wet ink, paste, liquids, or correction fluid that can chip or flake. There should be no staples, paper clips or tape, any of which can come loose or otherwise damage the fax unit. When in doubt, make a clean copy and use this for faxing.

Even the paper stock of an original must meet certain specifications. Coated or carbon-backed originals should not be used in fax machines. In addition, originals must not be too thick (greater than 0.13 mm) or too thin (less than 0.06 mm). 20-pound paper is best used.

Originals must not be damaged in any way before feeding through a fax machine. If the paper is curled, wrinkled or torn, it could jam the fax machine. This can also lead to a faulty transmission.

Again, in such cases make a copy first and feed the copy through the machine.

Cleaning

The fax machine needs to be cleaned on a regular basis. This cleaning is needed both inside and outside to keep the unit in top performance.

Use a soft, nonabrasive cloth. The use of an abrasive cloth could scratch or in some other way damage the unit being cleaned. If a cleaning fluid is used, be sure that it is meant for the job. Residues left behind defeat the purpose of cleaning. Just as bad are those fluids which cause damage. Refer to the fax manual for cleaning solutions allowed.

There may be a document glass where the original is placed when being scanned for transmission. The document glass may be only a narrow strip called a scan glass. Even so, it should be periodically cleaned.

The recording (thermal) head heats up to react with the heat-sensitive recording paper to which images are recorded as information is received. There is no toner in most fax machines, but rather this heat sensitive paper. (Plain paper fax machines use a toner/developer cartridge, in much the same way as a plain paper copier does.) The thermal head should be cleaned every three months, and more often if the machine is used heavily. The various rollers and separation rubber

should also be cleaned every three months. Be sure to use a cleaner safe for rubber parts. Alcohol will dry out those parts and can cause more harm than good. As is so often true, what seems to be a major problem could be nothing more than a filthy machine.

The rollers feed the document into the fax machine. Paper feed rollers advance the recording paper to the printer as well. With normal use, these rollers will collect ink, dust and graphite, all of which can cause image problems like spots or vertical lines to appear in the image and/or cause document jamming to occur. The separation rubber is used to feed the originals into the fax machine one at a time. This area may also accumulate foreign matter, which can cause jamming or the feeding of more than one page at a time.

11/FO
Fiber Optics

11/FO - TE
Test Equipment

This article presents an overview of the test equipment that is vital in trouble-shooting and maintaining fiber optic networks. Although we cover several types of equipment, we concentrate mainly on OTDRs (Optical Time Domain Reflectometers).

Electricity to Light

The concept of fiber optic communications is simple: An electrical signal is converted to light, which is transmitted through an optical fiber to a distant receiver, where it is converted back into the original electrical signal. Fiber optic communications has many advantages over other transmission methods. Some of these are: A signal can be sent over longer distances without being boosted; there are no interference problems from nearby electrical fields; the capacity of fiber optic cable is far greater than copper or coaxial cable; and the fiber itself is much lighter and thinner than copper cable. Figure 1 shows a typical fiber optics system.

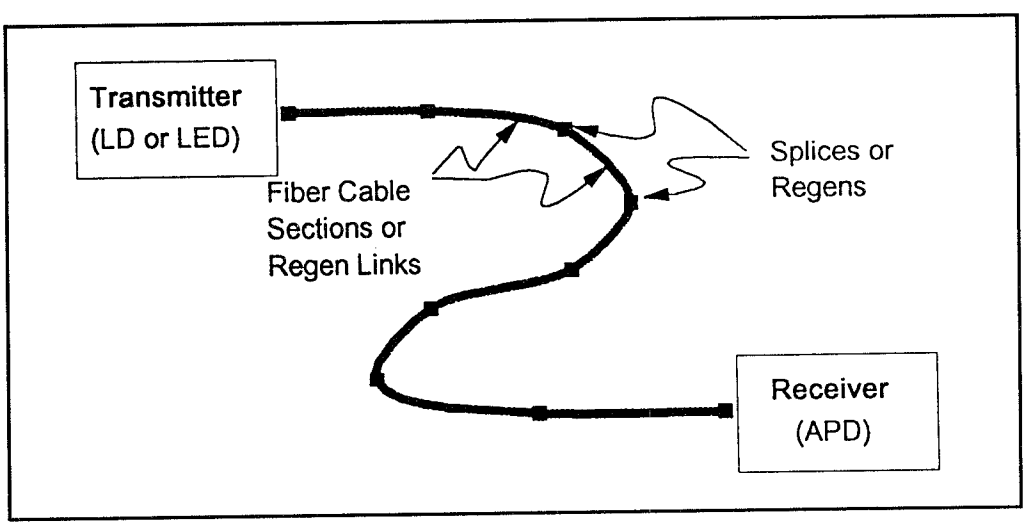

Figure 1: A typical fiber optics system

Testing Optical Fiber For Loss

The best way to measure overall attenuation in a fiber is to inject a known level of light in one end and measure the level when it comes out the other end. The difference in the two levels — measured in decibels, or dB — is the end-to-end attenuation (sometimes called *insertion loss*). The most accurate way to make this measurement is with a calibrated light source and an optical power meter. But a light source and power meter measurement do not indicate if the attenuation is along the entire fiber or localized in one trouble spot. In other words, this equipment does not indicate *where* a problem may be in a fiber.

Distance vs. Signal Level

An OTDR, on the other hand, provides a plot of distance versus signal level in a fiber. This information is extremely useful in determining where the problem exists in the fiber.

The OTDR

An Optical Time Domain Reflectometer is an electronic-optical instrument that is used to characterize optical fibers. It locates defects and faults, and determines the amount of signal loss at any point in an optical fiber. The OTDR needs to have access to only one end of a fiber to make its measurements. This instrument takes thousands of measurements along a fiber. The measurement data points are between 0.5 meters (1.6 feet) and 16 meters (53 feet) apart. The data points are displayed on the screen as a line sloping down from left to right, with distance along the horizontal scale and signal level on the vertical scale. By selecting any two data points with movable cursors, you can read the distance and relative signal levels between them.

OTDR Uses

OTDRs are widely used in all phases of a fiber system's life, from construction to maintenance to fault locating and restoration. An OTDR is used to:

- Measure overall (end-to-end) loss for system acceptance and commissioning; and for incoming inspection and verification of specifications on fiber reels.
- Measure splice loss — both fusion and mechanical splices — during installation, construction, and restoration operations.
- Measure reflectance of connectors and mechanical splices for CATV, SONET, and other analog or high-speed digital systems where reflections must be kept down.

- Locate fiber breaks and defects.
- Indicate optimum optical alignment of fibers in splicing operations.
- Detect the gradual or sudden degradation of fiber by making comparisons to previously-documented fiber tests.

How an OTDR Works

The Optical Time Domain Reflectometer uses the effects of Rayleigh scattering and Fresnel reflection (explained in the following sections) to measure the characteristics of an optical fiber. By sending a pulse of light (the "optical" in OTDR) into a fiber and measuring the travel time ("time domain") and strength of its reflections ("reflectometer") from points inside the fiber, it produces a characteristic trace, or profile, of the length versus returned signal level on a display screen.

Analyze, Print or Save

The trace can be analyzed on the spot, printed out immediately for documentation of the system, or saved to a computer disk for later analysis and comparisons. A trained operator can accurately locate the end of the fiber, the location and loss of splices, and the overall loss of the fiber. Many newer OTDRs provide for automatic analysis of the raw trace data, thereby eliminating the need for extensive operator training.

Rayleigh Scattering

When a pulse of light is sent down a fiber, part of the pulse gets blocked by microscopic particles (called dopants) in the glass and gets scattered in all directions. This is called Rayleigh (pronounced RAY-lay) scattering. Some of the light — about 0.0001% — is scattered back in the opposite direction of the pulse and is called the backscatter (see Figure 2). Since dopants in optical fiber are uniformly distributed throughout the fiber in the manufacturing process, this scattering effect occurs along the fiber's entire length.

Major Loss Factor

Rayleigh scattering is the major loss factor in fiber. Longer wavelengths of light exhibit less scattering than shorter wavelengths. For example, light at 1550 nm loses 0.2 to 0.3 dB per kilometer (dB/km) of fiber length due to Rayleigh scattering, whereas light at 850 nm loses 4.0 to 6.0 dB/km from the scattering. A higher density of dopants in a fiber will create more scattering and thus higher levels of attenuation per kilometer. An OTDR can measure the levels of backscattering very accurately, and it uses these measurements to detect small

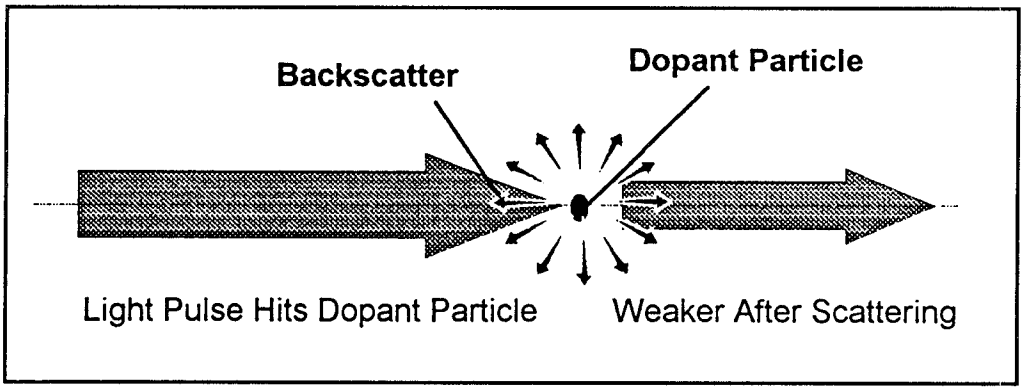

Figure 2: Rayleigh scattering

variations in the characteristics of the fiber at any point along its length.

Diffused Light

The Rayleigh scattering effect is like shining a flashlight in a fog at night: The light beam gets diffused — or scattered — by the particles of moisture. A thick fog will scatter more of the light because there are more particles to obstruct it. You see the fog because the particles of moisture reflect small amounts of the light back at you. The light beam may go a long way into the fog if it is not very thick, but in a dense fog, the light gets attenuated quickly due to this scattering effect. The dopant particles in fiber act like the moisture particles of the fog, returning small amounts of light back towards the source as the light hits them.

Fresnel Reflection

Whenever light traveling in a material (such as an optical fiber) encounters a different density material (such as air), some of the light — up to 4% — is reflected back towards the light source, while the rest continues out of the material. These sudden changes in density occur at ends of fibers, at fiber breaks, and sometimes at splice points. The amount of the reflection depends on the magnitude of change in material density (described by the Index of Refraction — larger numbers mean higher densities) and the angle that the light strikes the interface between the two materials. This type of reflection is called a Fresnel (pronounced freh-NELL) reflection. It is used by the OTDR to precisely determine the location of fiber breaks (see Figure 3).

Reflected Light

A Fresnel reflection is like shining a flashlight at a window. Most of the light passes through the window, but some of it reflects back at you. The angle that the light beam hits the window determines whether or not the reflection will

bounce back into the flashlight or into your eyes.

Backscatter Level vs. Transmission Loss

Although the OTDR measures only the backscatter level and *not* the level of the transmitted light, there is a very close correlation between the backscatter level and the transmitted pulse level: The backscatter is a fixed percentage of the transmitted light. The ratio of backscattered light to transmitted light is also known as the *backscatter coefficient.* If the amount of transmitted light drops suddenly from point A to point B (caused by a tight bend, a splice between two fibers, or by a defect), then the corresponding backscatter from point A to point B will drop by the same amount. The same loss factors that reduce the levels of a transmitted pulse will show up as a reduced backscatter level from the pulse.

OTDR Block Diagram

The OTDR consists of a laser light source, an optical sensor, a coupler/splitter, a display section, and a controller section (see Figure 4).

Laser Light Source

The laser sends out pulses of light on command from the controller. The duration of the pulse (the pulse width) can be selected for different measuring conditions. The light goes through the coupler-splitter and into the fiber under test. Some OTDRs have two lasers to allow for testing fibers at two different wavelengths.

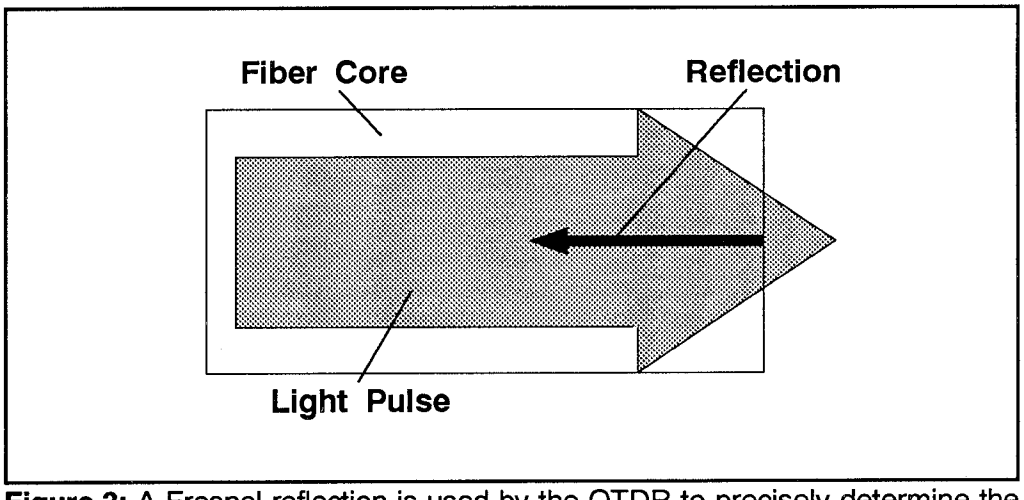

Figure 3: A Fresnel reflection is used by the OTDR to precisely determine the location of fiber breaks

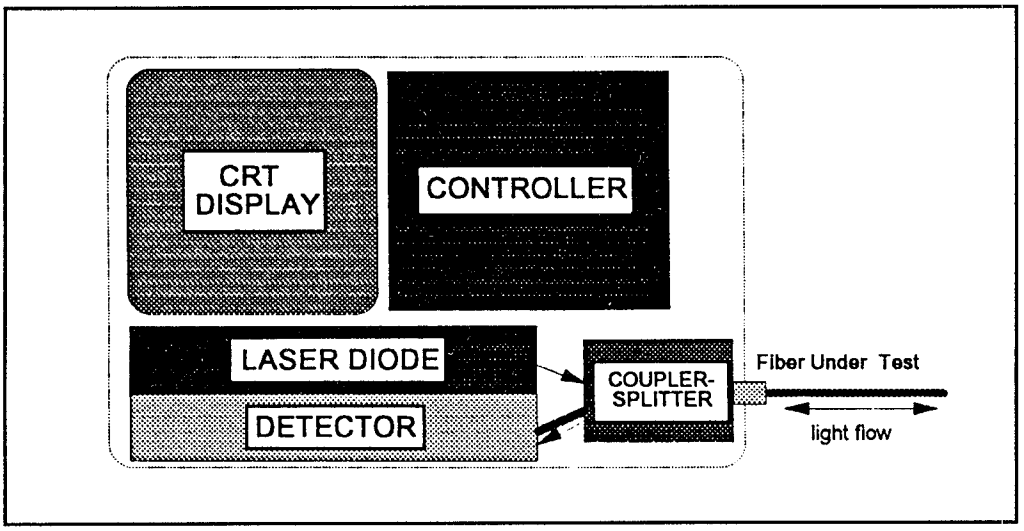

Figure 4: OTDR block diagram

Only one laser is used at a time, and you can easily switch between the two with the press of a button.

Coupler/Splitter

The coupler/splitter has three ports, one each for the source, the fiber under test, and the sensor. It is a device that allows light to travel only in specific directions: *from* the laser source *to* the fiber under test, and *from* the fiber under test *to* the sensor. Light is *not* allowed to go directly from the source to the sensor. Thus, pulses from the source go out into the fiber under test, and the returning backscatter and Fresnel reflections are routed to the sensor.

Optical Sensor Section

The sensor is a photodetector that measures the power level of the light coming in from the fiber under test. It converts the optical power in the light to a corresponding electrical level — the higher the optical power, the higher the electrical level. OTDR sensors are specially designed to measure the extremely low levels of backscattered light. The sensor section includes an electrical amplifier to further boost the electrical signal level.

The power of a Fresnel reflection is about 40,000 times higher than that of backscatter, and is more than the sensor can measure. It overloads the sensor, driving it into saturation. The electrical output level is subsequently *clipped* at the sensor's maximum output level. Therefore, whenever a test pulse encounters the end of a fiber — whether at a mechanical splice or at the end of the fiber — it causes the sensor to be *blinded* for as long as the pulse occurs. This blind period

is known as the *dead zone*.

Controller Section

The controller is the brains of the OTDR. It tells the laser when to pulse; it obtains the power levels from the sensor; it calculates the distance to scattering and reflecting points in the fiber; it stores the individual data points; and it sends the information to the display section.

A major component of the controller section is a very accurate clock circuit that is used to measure precisely the time difference between the laser pulsing and the sensor detecting returning light. By multiplying this round-trip pulse travel time by the speed of light in fiber (which is the speed of light in free space corrected by the index of refraction), the round-trip distance is calculated. The distance from the OTDR to the point (one-way distance) is simply half of the round-trip distance.

Continuous Flow

Since backscattering occurs all along a fiber, there is a continuous flow of light back into the OTDR. The controller samples the level measured by the sensor at regular time intervals to get its data points. Each data point is described by its sequence time (which relates to distance from the OTDR) and power level. Because the original pulse gets weaker as it travels down the fiber (due to Rayleigh scattering induced loss), the corresponding returned backscatter level gets weaker further down the fiber. Thus, data points generally have decreasing power levels from start to end. But when a Fresnel reflection occurs, the power level of the corresponding data point for that location suddenly goes up to its maximum level — way above the level of the backscatter just prior to it.

When the controller has gathered all its data points, it plots the information on the display screen. The first data point is displayed at the left edge of the graph as the starting point of the fiber. Its vertical position is based on its returned signal power level — a higher power is plotted higher up on the graph. Subsequent data points are placed to the right. The resultant trace is a sloping line that runs from the upper left towards the lower right. The slope of the line indicates its loss-per-unit-distance (dB/km) value. Steep slopes mean larger dB/km values. Data points corresponding to backscatter level make up the line. Fresnel reflections look like spikes coming up from the backscatter level. A sudden shift of the backscatter level indicates a *point loss*, which in turn indicates either a fusion splice or a stress point in the fiber where light is escaping (see Figure 5).

Display Section

The display section is a CRT screen that shows the data points that make up the fiber trace, and displays the OTDR set-up conditions and measurements. Most OTDR displays connect the data points with a line to provide a clearer look at

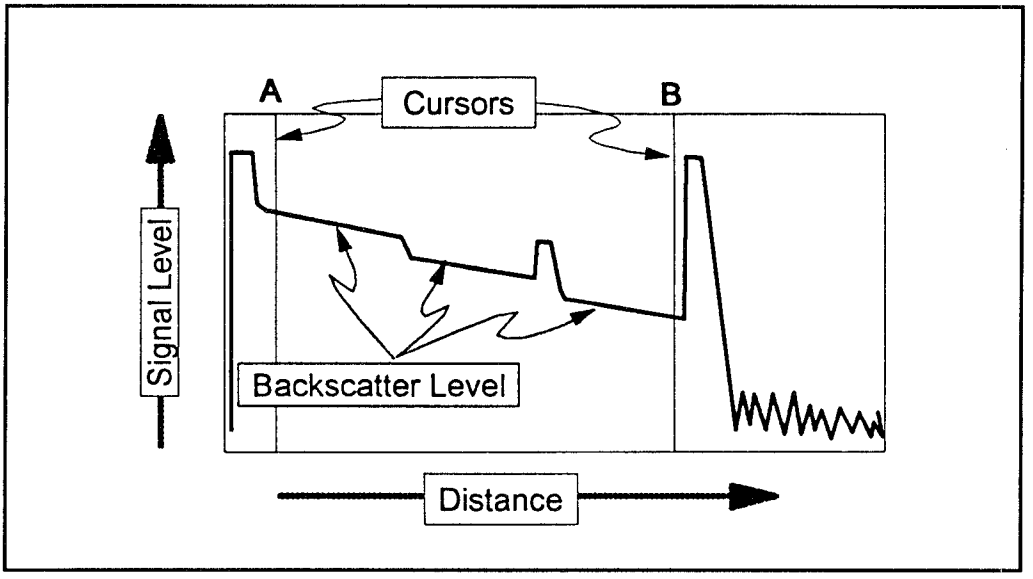

Figure 5: Components of OTDR trace display

the overall trace. You can manipulate cursors on the screen to select any data point on the fiber trace. When the cursor is on a data point, the distance to that point is displayed on the screen. An OTDR with two cursors will display the distances to each cursor and the difference in backscatter levels between them. You can choose the type of measurement being made with the cursors, such as 2-point loss, dB/km, splice loss, and reflectance. The measurement results are shown on the display.

OTDR Specifications

As with any other diagnostic instrument, an OTDR has certain specifications that let you know about its capabilities. These are: Dynamic range, dead zone, resolution and accuracy.

Dynamic Range

The dynamic range of an OTDR determines how long of a fiber can be measured. It is listed as a dB value — larger values mean longer distance measurement capability. A test pulse needs to be strong enough to get to the end of the fiber to be tested, and the sensor has to be good enough to measure the weakest backscatter signals that come from the end of a long fiber. The combination of the total pulse power of the laser source and the sensitivity of the sensor determines the dynamic range. A very powerful source and a sensitive sensor will give a large dynamic range, while a weaker source and an average sensor

will yield a low dynamic range.

Determining Dynamic Range

Dynamic range for an OTDR is determined by taking the difference between the backscatter level at the near end of the fiber and the upper level of the average noise floor at or after the fiber end (see Figure 6). A large dynamic range will produce a clear and smooth indication of the backscatter level at the far end of the fiber. A small dynamic range will produce a "noisy" trace at the far end. The data points that make up the trace of the backscatter level will not form a smooth line, but will vary up and down from one to the next. It is difficult to distinguish details in a noisy trace; the data point variation can be more than the value of a splice loss.

Increasing the total pulse output power of a laser source can be accomplished in two ways: Increase the absolute amount of light emitted, or increase the pulse duration (pulse width). There are limits to each of these procedures. For example, a laser diode has a natural maximum output level that cannot be exceeded. Also, a higher output level means a shorter component life — the laser might burn out faster.

Increased Pulse Width

When the pulse width is increased other performance characteristics, such as the dead zone, are affected. Longer pulse widths produce longer dead zones. Sensors also have natural limitations to their ability to measure low light levels. At some point, the electrical level sent out by the sensor (which corresponds to the optical power level detected) becomes lost in the electrical noise of the circuitry and the

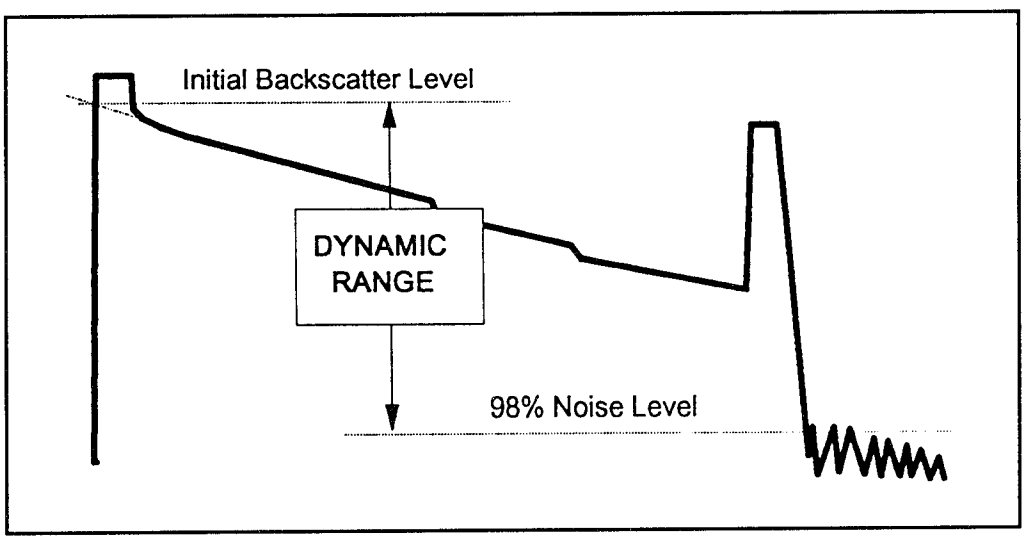

Figure 6: Dynamic range of an OTDR

controller cannot distinguish between the noise and sensor measurements. Electrical shielding within an OTDR is critical in order to decrease the adverse effects of ambient electrical noise in the instrument. Additionally, when a sensor is operating at its peak sensitivity, its level accuracy is decreased. To improve accuracy at lower light levels an OTDR employs averaging techniques to combine the measurements from thousands of pulses. The use of averaging improves the sensitivity of a sensor and therefore improves an OTDR's dynamic range.

Dead Zone

As mentioned, dead zone refers to the space on a fiber trace following a Fresnel reflection. The high return level of the reflection covers up the lower level of backscatter. An OTDR's sensor is designed to measure the low backscatter levels from a fiber, and becomes *blinded* when a larger Fresnel reflection hits it. This blind period lasts as long as the pulse duration. When the sensor receives the high level from the reflection it becomes saturated and unable to measure the lower levels of backscatter that may follow immediately after a reflective event. The dead zone includes the duration of the reflection *plus* the recovery time for the sensor to readjust to its maximum sensitivity. High quality sensors recover more quickly than cheaper ones and thus achieve shorter dead zones.

The dead zone effect can be illustrated by considering what could happen to you while looking at a starlit sky. With no other lights around, your eyes become sensitive and you are able to see very dim stars (backscatter). If someone then shines a flashlight in your eyes, the overpowering light (a Fresnel reflection) blinds you and you are no longer able to see the stars. You will not be able to see anything but the bright light for as long as it is in your eyes (pulse duration). After the light is removed, your eyes slowly readjust to the darkness, becoming more sensitive, and you are able to see the low light level of the stars again. The OTDR sensor acts very much like your eyes in this example. The period of blindness and recovery to backscatter sensitivity is the dead zone.

Decrease Pulse Width

Since the dead zone is directly related to the pulse width, it can be reduced by decreasing the pulse width. But decreasing the pulse width lowers the dynamic range. An OTDR design must make a compromise between these two characteristics. Likewise, the OTDR user must choose a pulse width depending on whether it is more important to see closely spaced events or see farther out in a fiber. The best design gives you a large dynamic range at a short pulse width. This dynamic range per pulse width determines how far out in the fiber you will be able to resolve two closely-spaced events (splices).

Dead zones occur in a fiber trace wherever there is a fiber connector, and at some

defects (such as cracks) in the fiber. There is always at least one dead zone in every fiber—where it is connected to the OTDR. This means that there is a space starting at the beginning of the fiber under test in which *no measurement can be made*. This space is directly related to the pulse width of the laser source. Typical pulse widths in OTDRs range from 3 ns to 20,000 ns. In distances, this works out to be from two feet to over a mile long. If you need to characterize the part of the fiber that is close to the near end, or if you need to measure two splices that are close together (less than 100' apart), you will need to select the shortest pulse width possible that will reach out to the point you want to measure.

Event Dead Zone

Dead zones are characterized as an *event dead zone* or an *attenuation dead zone*. An event dead zone is the distance after a Fresnel reflection, before another Fresnel reflection can be detected. This tells you how soon after a reflection (usually the reflection from the connector at the OTDR) you can detect a break (see Figure 7).

Attenuation Dead Zone

An attenuation dead zone is the distance after a Fresnel reflection until backscatter level can be detected. This specification tells you how soon after a reflection you can measure a second event, such as a fusion splice or a defect in the fiber. Attenuation dead zones are always longer than event dead zones, since the detector must make a full recovery down to the backscatter level (see Figure 8).

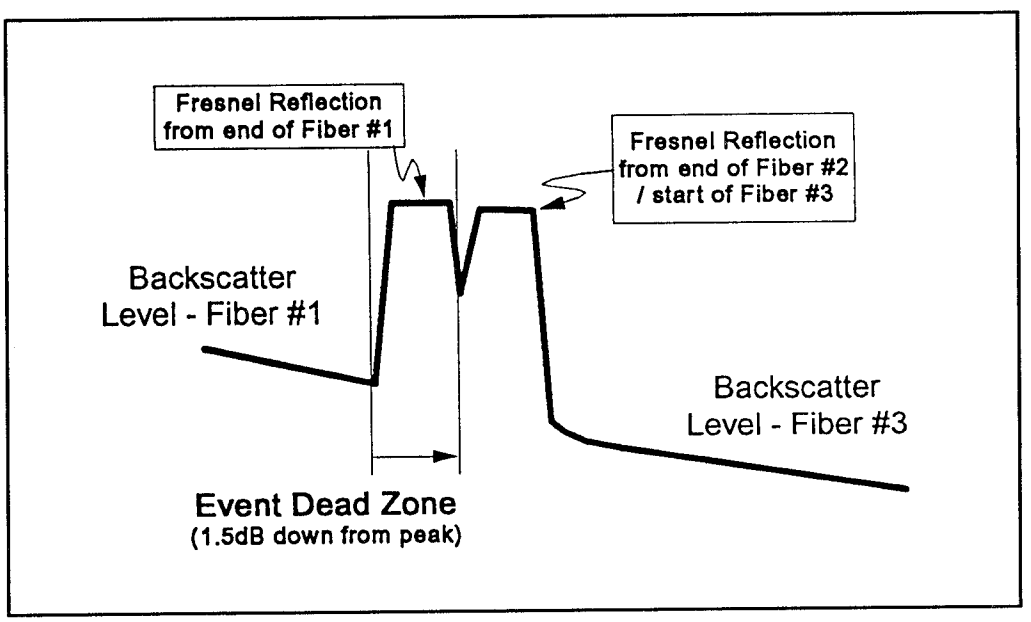

Figure 7: An event dead zone

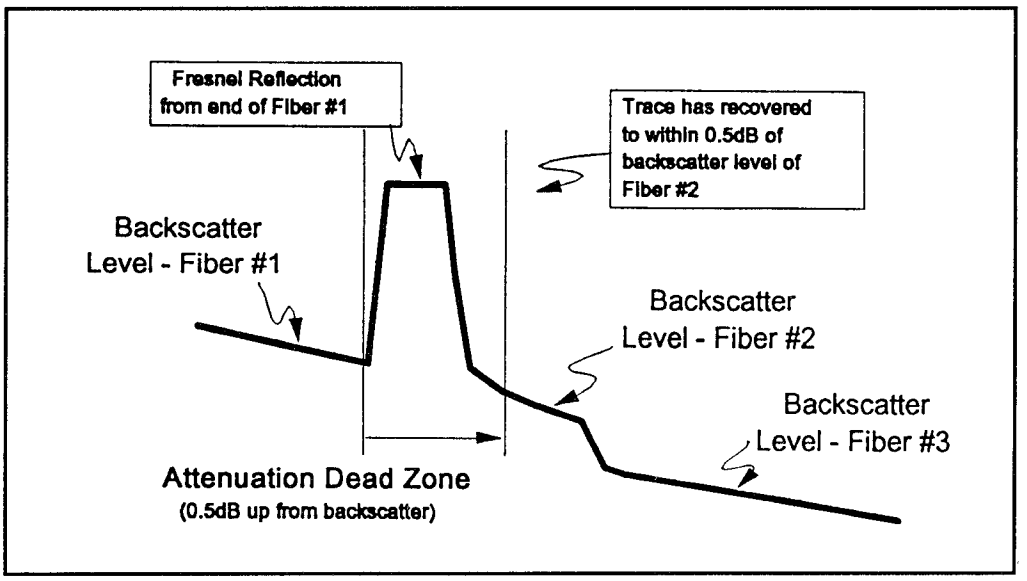

Figure 8: Attenuation dead zone

Resolution

There are two resolution specifications: loss (level) and spatial (distance). Loss resolution is the ability of the sensor to distinguish between levels of power it receives. Most OTDR sensors can display down to 1/100th (0.01) or 1/1000th (0.001) of a decibel differences in backscatter level. (This specification should not be confused with level accuracy, which is described later.) When the laser pulse gets farther out in the fiber, the corresponding backscatter signal gets weaker and the difference between backscatter levels from two adjacent measurement points—or from two measurements of the same point—becomes larger. Thus, the data points that make up a trace develop relatively more vertical separation farther out along the fiber than they do close in to the OTDR. This produces a noisy trace towards the end and requires some averaging over many measurement pulses to smooth it out. Noise in the trace may prevent you from detecting or measuring low-loss splices and low-loss defects.

Spatial Resolution

Spatial resolution refers to how close the individual data points that make up a trace are spaced in time (and corresponding distance). It is measured in terms of distance. High resolution is 0.5 m (less than 2'), and low resolution is 4 to 16 m (13' to 53'). The OTDR controller samples the sensor at regular time intervals to get the data points. If it takes readings from the sensor very frequently, then the data points will be spaced close together and the OTDR can detect events in the fiber that are closely spaced. The ability of the OTDR to locate the end of the fiber is affected by the spatial resolution. If it only takes data points every 8 m, then

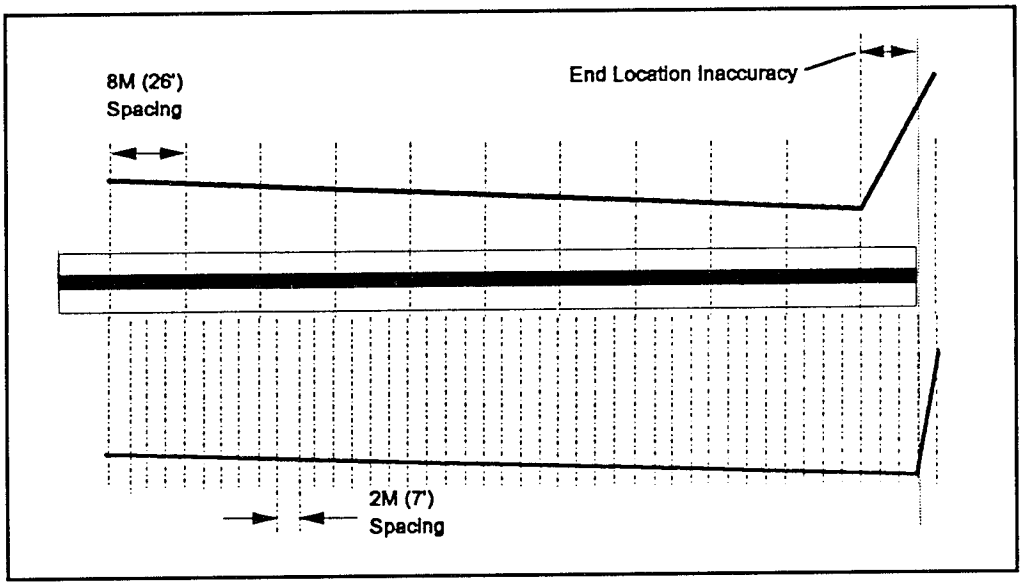

Figure 9: Data point resolution

it can only locate a fiber end within ±8 m (see Figure 9).

Select and Measure Distance and Loss

You are able to select and measure the distance and loss between any two data points. Those that are spaced closer provide more detail. An OTDR displays the fiber trace as a line that connects the data points, and allows you to place a cursor between points as well as on points. This interpolation of the information produces a better display resolution than the actual spatial (or data point) resolution. It is easy to achieve "centimeter resolution" on the display screen simply by spreading out the space between two measurement points on the screen so that the cursor moves only a very small distance. This does not mean the OTDR is making high resolution measurements, it is simply a high resolution display.

Spatial resolution is reduced in certain areas by a dead zone. Valid measurements of fiber attenuation are made only from backscatter level to backscatter level. Data points taken while the sensor was in saturation due to a Fresnel reflection cannot be used to make loss measurements, since the sensor was not able to make an accurate level measurement at that time. Therefore, the spatial resolution around a Fresnel reflection is worse (lower resolution) because the only usable points occur before and after the dead zone.

Accuracy

The level accuracy of the OTDR sensor is measured in the same way as optical power meters and photodetectors of any kind are measured. The accuracy of any

optical sensor depends on how closely the electrical current output corresponds to the input optical power. Usually an optical sensor converts incoming optical power to a corresponding electrical current level evenly across its operating range, but the electrical output is extremely low. All sensors use electrical amplifiers to boost the very low electrical output level, and all amplifiers introduce some amount of distortion to the signal. High quality amplifiers are able to boost both high and low levels by the same amount. In other words, they have a very *linear* response to an input over most of the operating range. Lower quality amplifiers introduce significant distortion into the amplified signal at either high or low input levels. They become *non-linear* at the extremes of operation. The linearity inherent in an optical sensor and its amplifier determines how accurately the incoming optical power is converted to an amplified electrical level.

Level Accuracy

Level accuracy for many optical sensors is stated as either a flat plus-or-minus (±) dB amount (if its measurement range is small), such as ±0.10 dB, or a percentage of the power level, such as 2%. For OTDRs, a better representation of the accuracy is the linearity, stated as a ±dB amount per dB of power measured over certain ranges of measurement, such as ±0.10 dB/dB in the 10 to 20 dB range. OTDRs are expected to maintain a reasonable accuracy over very wide ranges of measurements — some spanning over 35 dB of backscatter levels — and thus require good linearity over the entire optical input range of the sensor. Linearity problems in an OTDR often show up as a rolling off or bumpy appearance of the displayed fiber trace.

Fresnel reflections are generally outside of the measurement range of the sensor and are not considered in the linearity specifications. However, the trace display during the recovery period after a reflection often exhibits characteristics of non-linearity as the incoming power level makes the transition from extremely high (reflection) to very low (backscatter).

Distance Accuracy

There are three components to distance accuracy in an OTDR: Clock stability; data point spacing; and fiber uncertainty due to index of refraction uncertainty.

The accuracy of distance measurements depends on the stability and accuracy of the clock circuit that times the pulses going out and the interval between sampling of the sensor output. Clock accuracy is stated as a percentage, which relates to percentage of distance measured. For instance, an accuracy of 0.01% of distance means that if the distance to the end of the fiber is measured as 20,000 feet, then the accuracy of this measurement is ±2 feet (20,000 x 0.0001). If the clock runs too fast or too slow, then the time measurements — and corresponding

distance measurements — will be shorter or longer than the actual value.

Spatial resolution also affects accuracy. An OTDR can only make accurate distance measurements based on the actual data points it takes. The closer the data points, the more likely one of them will fall close to, or on, a fault in the fiber.

User-Setable IOR

Distance in an OTDR is calculated from the speed of light in the fiber, which is calculated from the speed of light in free space (a constant value) divided by the index of refraction or IOR. This means that a user-setable IOR is critical to accurate measurement of distance. If the IOR is wrong, then the distance will be wrong. However, the characteristics of a fiber can change along its length, producing slight variations in its IOR, and therefore causing additional distance inaccuracies. This *fiber uncertainty* is due to the variance of IOR within the same fiber and between two or more fibers spliced together. The worst case for IOR variation is when two different manufacturers' fibers are spliced together.

In most cases you should use the fiber manufacturer's recommended IOR setting for the fiber type and wavelength to be tested. Table 1 is a listing of IOR values for various fibers. These values are obtained from the fiber manufacturers and represent typical *effective group index of refraction* values as of early 1992. You should check with the fiber manufacturer if you have questions about the IOR. Changes in the fiber manufacturing processes will change the IOR values.

Wavelength

Optical fiber is used and tested at only three wavelength bands: 850 nm, 1300 nm, and 1550 nm. Multimode fibers work in the 850 nm and 1300 nm bands.

Manufacturer	Singlemode Fiber Type	1300nm Singlemode	1550nm Singlemode	Multimode Core Size	850nm Multimode	1300nm Multimode
Alcatel	Normal	1.4660	1.4660	–	N/A	N/A
AT&T	Normal	1.4659	1.4666	50/125	1.4840	1.4790
	D.S.	1.4743	1.4750	62.5/125	1.4960	1.4910
Corning	SMF-21	1.4640	1.4640	50/125	1.4655	1.4598
	SMF-28	1.4700	1.4700	62.5/125	1.4776	1.4719
	SMF/D.S.	1.4760	1.4760	100/140	1.4805	1.4748
Sumitomo	Normal	1.4670	1.4670	50/125	1.4840	1.4790
				62.5/125	1.4960	1.4910

Table 1: Index of refraction

Singlemode fibers work only in the 1300 nm and 1550 nm bands. OTDR measurements are made at the same wavelength at which the fiber system operates.

Measuring Wavelength

The measuring wavelength of an OTDR is listed as its central wavelength with a certain linewidth. Linewidth is the spread of wavelengths around the central wavelength of the laser source. For example, a laser with a central wavelength of 1300 nm and a linewidth of 20 nm will include wavelengths from 1290 nm (1300 - 10) to 1310 nm (1300 + 10). Lasers with narrow linewidths are more expensive than those with wide linewidths. Central wavelengths are also normally specified as being within a certain tolerance, such as ±30 nm. For a specification that reads "1310 nm ±30 nm, Linewidth 20 nm," the central wavelength could be anywhere between 1280 nm and 1340 nm, and the wavelengths covered could be anywhere from 1270 nm to 1350 nm.

Loss in fiber is wavelength dependent. It is important to test fiber at about the same wavelength as it will be operated. Optical transmitters (lasers and LEDs) are generally specified as to their wavelength band, that is, 850 nm, 1300 nm, or 1550 nm. Their specific central wavelength and linewidth is not always clearly listed. In some cases, if a test for attenuation is made at one end of a wavelength band — at 1320 nm for instance — and the system will be operated at the other

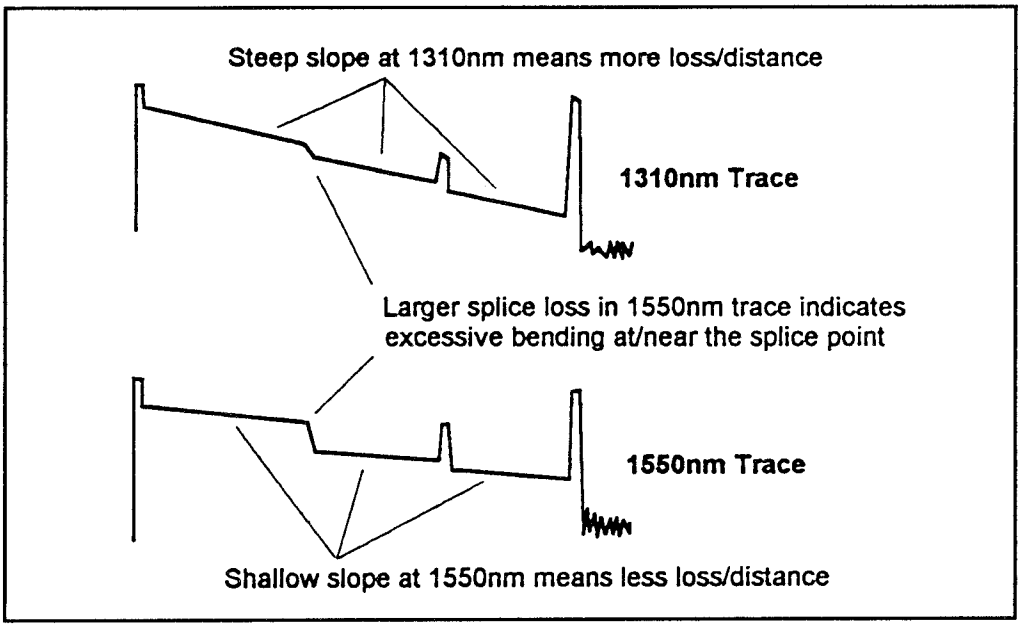

Figure 10: Fiber traces at two different wavelengths

end of the band — 1280 nm for instance — then the test signal will be attenuated at a slightly different amount than the operating signal. In long fiber runs (over 20 miles) this could lead to unexpected problems at the receive end of the system.

Wavelength-Dependent Loss

The clearest wavelength-dependent loss can be seen when comparing two traces of the same fiber taken at two different wavelengths. The longer of the two wavelengths will indicate less overall loss than the shorter since it exhibits lower scattering loss. This shows up as a shallower slope of the trace (lower loss per unit of length — dB/km). However, the longer wavelength tends to leak out of the fiber more easily due to bending. By comparing traces taken at the two wavelengths, you can easily determine if a fiber is being stressed due to bending. Excessive bending frequently occurs in splice storage trays, within splice closures, at cable bends along its route, and at the end connectors. Figure 10 shows fiber traces at two different wavelengths.

Connector Type

In order to hook up a fiber to a source or sensor, a connector must be attached to the fiber. There are many connector types available, but the most common are: FC/PC, ST, Biconic, SMA, and D4. Fibers always have male connectors attached. Test equipment and transmission equipment always have female connectors (or female-female *bulkhead* connectors that allow two male connectors to be coupled).

Connector Characteristics

Some of the connector characteristics that must be considered are reflectance of the connector, repeatability, stability of connection, physical size (length is usually important), and material composition. Connectors that are designed to make contact with each other have lower reflectance values than those that are not. Keyed connectors (with tab and slot configurations) can be connected only one way and are therefore more repeatable than non-keyed connectors. When a connector is properly mated, it should not be able to be easily rotated or moved enough to change the amount of light passing through it. The length of a connector determines how far it sticks out from patch panels and transmission equipment. Metallic connectors probably last longer and are more stable than plastic connectors. The FC/PC family of connectors has very good characteristics and is one of the best for singlemode and multimode use. The ST-style connector is also very good and is fast becoming one of the standard connectors in many systems.

The connector on the OTDR should be a good one, even if the connectors on the fibers are not the same type. You nearly always will be making the connection

between the OTDR and the fiber with a patchcord or jumper — a short length of single-fiber cable with a connector on each end.

External Interfaces

Most OTDRs provide a means to connect external devices such as printers, plotters, disk drives, modems, CRTs, and computers. The connections to these devices are made through one or more of the following standard interface types:

- IEEE-488 parallel interface for computer or pen plotter.
- RS-232C 9-pin serial interface for computer (COM port) or serial printer.
- Centronics 25-pin parallel interface for most computer printers.
- Composite BNC interface for video plotters, VCRs, and some monitors.
- RGB video 9-pin interface for color (computer) monitors.
- RJ-11 modular telephone line cord jack for built-in modem.

Using An OTDR

Choosing the configuration of an OTDR depends on the fiber to be tested. OTDRs can measure only one fiber type at a time — singlemode or multimode. You can select either a single- or dual-wavelength measuring capability for each type of fiber. Thus, OTDRs are available to test 850 nm and/or 1300 nm multimode; or 1300 nm and/or 1550 nm singlemode. Most OTDRs are modular in design so that the laser section can be easily changed to suit the type of fiber to be tested.

Modular Design

In the modular design, the OTDR mainframe contains the controller, display, operator controls, and optional equipment (such as printer/plotter, external interfaces, modem, disk drive, and so forth). The optical module, consisting of the laser source and optical sensor sections, is plugged into the mainframe, and can be changed to allow testing at various wavelength and fiber type combinations.

Fiber Type

An optical module is typically limited to working with either singlemode or multimode fiber. The primary difference between these two fiber types is the diameter of the light-carrying fiber core — multimode cores are at least five times larger than singlemode (see Figure 11). Since an OTDR must both send and receive light, it cannot efficiently connect with both fiber types. For example, a module designed for singlemode fiber will couple light *into* both singlemode and multimode fibers easily, but when the light returns, most of the backscatter from the multimode fiber will be lost as it tries to couple into the

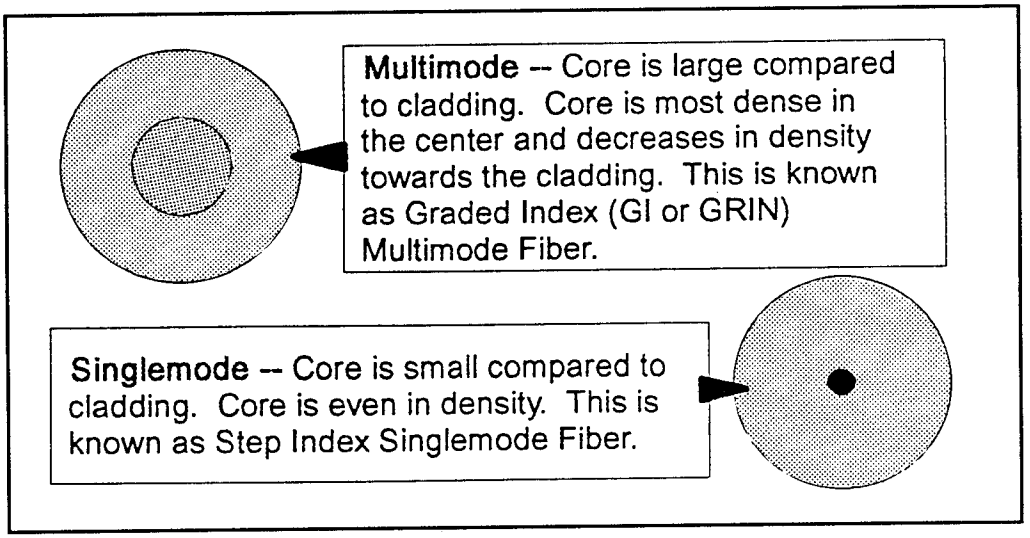

Figure 11: Optical fiber types

smaller core of the singlemode fiber that goes to the detector.

Singlemode Fiber Cores

Singlemode fiber cores are all about the same size: between eight and 10 microns in diameter. A singlemode optical module is optimized for best light coupling in this diameter range.

Multimode Fiber Cores

Multimode fiber cores come in diameters of 50 microns, 62.5 microns, and 100 microns. A multimode optical module is optimized at only one of these core sizes internally, although it will be able to measure the other two cores sizes without difficulty.

Wavelength

The test wavelength is an important specification of an OTDR. It is critical to test a fiber system at the wavelength at which it operates. But it may also be useful to test the system at other wavelengths as well. Although you can configure an OTDR that will operate at just one wavelength, it is best to include the capability of testing at each wavelength for the fiber type (850 nm and 1300 nm for multimode; 1310 nm and 1550 nm for singlemode). A complete test of a fiber should be done at both wavelengths so that you will know its complete characteristics in case the system is upgraded to work at the other wavelength later.

Light at shorter wavelengths exhibits greater amounts of attenuation in fiber due to a higher sensitivity to Rayleigh scattering. But light at longer wavelengths is

more sensitive to bending loss, and will "leak out" of fiber more than shorter wavelength light will. This means that a fiber that has been stressed by bending will show a greater loss at the point of bending when tested at 1550 nm than at 1300 nm, even though the overall end-to-end attenuation will be lower at 1550 nm than at 1300 nm. The sensitivity of different wavelengths of light to different loss mechanisms in fiber can be a very important tool in troubleshooting a fiber cable.

Connector

Fiber systems are always connected before they are put into use. Either a connector is field-installed on the fiber, or a pre-connected fiber *pigtail* cable is spliced onto the fiber end. The connector on the OTDR should match the connector of the fiber system for best results.

When an OTDR is used to test many different fiber systems with different connector types installed, a fiber jumper cable (or patchcord) must be used. A jumper cable has a connector on both ends, one of which is connected to the OTDR, and the other is connected to the fiber system. The jumper may have different connectors on each end to make the match between the system and the OTDR. Even when an OTDR connector type matches the system, a jumper cable is often used to eliminate wear and tear on the system fiber. There may be more than one connector type in a fiber system, so you will need as many patchcords as you have connector types. Each patchcord will have the OTDR type connector on one end and the system type connector type on the other end.

When making a connection to a non-connected, "bare" fiber, you will need to use a pigtail. This is the same as a jumper, but with only one end connected. The other end is bare fiber so that you can make a temporary splice to the bare fiber end to be tested.

Measurement Parameters

Once an OTDR is properly configured for the fiber system to be measured, you are ready to make the test. To achieve the best results, a few decisions must be made regarding the instrument set-up conditions. Many of these measurement parameters only need to be set once, and will remain in the instrument's memory. If trace data can be stored in the OTDR's memory or on a diskette, then when the trace is recalled back to the screen, the setup information is normally also recalled.

Distance Range

Distance range is also known as display range. It limits the amount of fiber that will be displayed on the screen. The distance range must be longer than the fiber

to be tested. The distance range affects test accuracy and the time required to complete a test.

Since an OTDR must send out one test pulse at a time, and allow all returns from the pulse to get back to the detector before sending out another pulse, the distance range determines the rate at which test pulses are sent out. This is known as the *pulse repetition rate* (PRR). The faster the rate, the quicker the averaging time for a given number of pulses. Since a longer fiber requires longer pulse transit times, the overall averaging is slower with longer distance ranges because the PRR is slower. If a long fiber is tested using a shorter distance range, then there is a possibility that a new test pulse will be sent into the fiber before all the return signals from the previous pulse are received by the OTDR detector. The resultant multiple received signal levels could produce unpredictable results on the OTDR display and could affect level measurements. It could also produce "ghosts" in the fiber trace.

Resolution

Measurement resolution — the spacing between data points — can be selected on some OTDR configurations. Higher resolutions (closer data points) will provide more detail about a fiber, but a test will usually take longer than one made at a lower resolution. The best resolution offered by most OTDRs is 0.5 m (about 2') between data points. Normally the resolution is 8 m (about 25').

Higher resolution can provide more accurate location of an event. For instance, if an OTDR takes measurements every 8 m along a fiber, then it is likely that a break could occur 7 m after a data point. The resulting Fresnel reflection would appear to start at the following point, with the last backscatter level occurring at the previous point. Since distance to a break is always located at the last backscatter level prior to a Fresnel reflection, the actual location of the break (reflection) would be off by 7 m, or 23'. If the data point resolution were shortened to 0.5 m, then the reflection location would be more accurately located — to within about 1'.

Resolution should not be confused with the horizontal display scale. Also, the cursor resolution — how short of a distance the cursor can be moved on the screen — has nothing to do with data point spacing. Most cursors can be placed between data points and thus appear to offer a better resolution.

Pulse Width

You can change the duration of the laser pulse. By selecting a longer or shorter pulse width, you can control the amount of backscatter level coming back, and the dead zone size. A long pulse width will inject the highest amount of optical power into the fiber and therefore will travel farther down the fiber and produce

stronger backscatter levels. But it will also produce the longest dead zones. Conversely, a short pulse width will give the shortest dead zones, but will send back weaker backscatter.

Long pulse widths give the maximum dynamic range for an OTDR and are used to quickly find defects and breaks in a fiber. Because the backscatter levels are higher, shorter averaging times are required to produce a clean trace.

Short pulse widths are used to look at the part of the fiber that is closest to the OTDR, and to resolve two or more events that are closely spaced within the fiber. Because of the shorter dead zone it can detect details in the fiber backscatter just past a Fresnel reflection. But because of the lower levels of backscatter, longer averaging times are needed. The rule of thumb for setting the pulse width is: Long pulse to look long; short pulse to look short.

Averaging

The data points obtained from a single measurement pulse may vary in level from one to the next even though there is little change in the pulse they came from. The resulting trace looks noisy or fuzzy. To get a more reliable and smoother looking trace, OTDRs send out thousands of measurement pulses every second. Every pulse provides a set of data points that are then averaged together with subsequent sets of points. This improves the signal-to-noise ratio of the trace. Averaging takes time. Usually, a lot of averaging is required when a long fiber

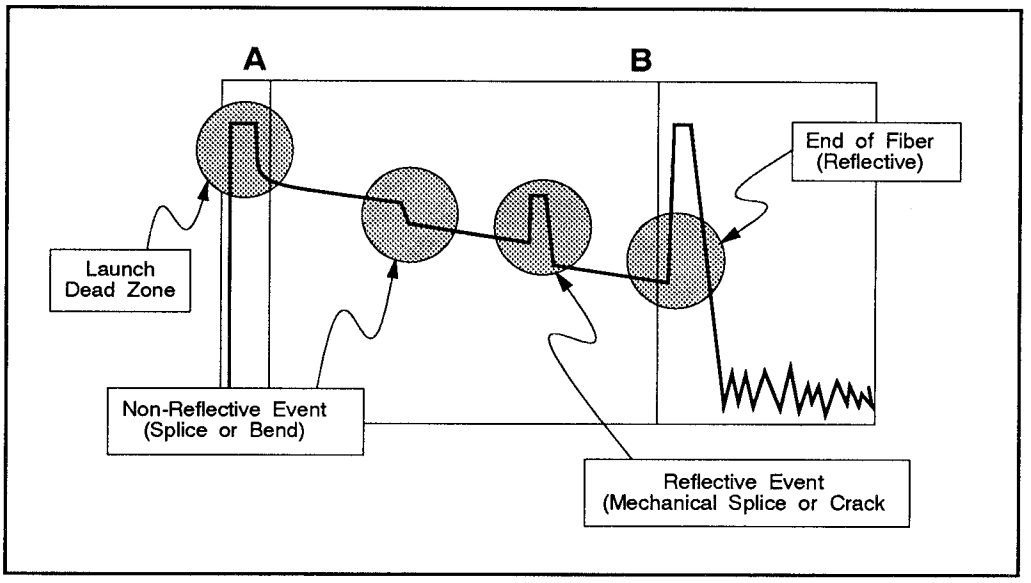

Figure 12: Elelments of an OTDR trace

is being tested and when a short pulse width is being used. You can pre-set the amount of averaging that takes place so that test results will be consistent.

When a test is made in "real time" there is little or no averaging done. With a real-time display you can see changes occurring in the fiber as they happen. Real-time testing is normally used during splicing operations to identify a fiber and measure the splice as it is being made. It is also used to make rapid measurements of fiber cable on a reel for acceptance testing.

Interpreting the Fiber Trace

After a fiber has been scanned and the resulting trace is displayed on the screen, you must interpret the trace. Cursors are used to select the end points of measurements, and the numerical results are displayed on the screen as shown in Figure 12.

Fault Location

The most critical measurement that is made with an OTDR is the location of a defect or break in the fiber. In order to repair a fault, its precise location must be found.

A Fresnel reflection occurs at most fiber faults. This appears as a sudden spike up on the fiber trace, indicating that the OTDR pulse has encountered a sudden

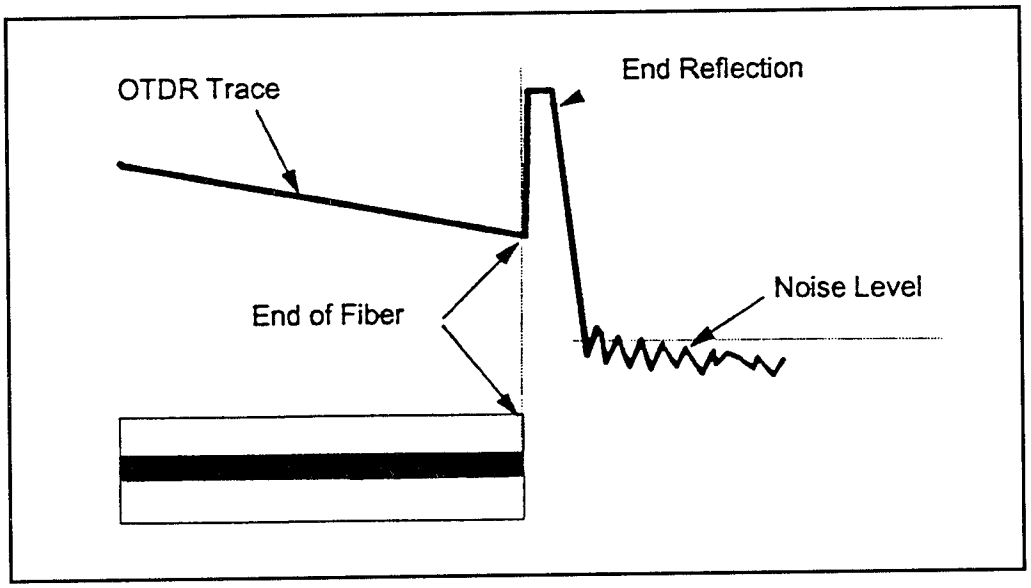

Figure 13: Fiber end location

change in the density of the glass — that is, it encountered air at the end of the fiber. The distance to this reflection on an OTDR trace is the point at which the trace spikes up. If the trace returns to the backscatter level after the reflection, then the fiber is not completely broken. The amount of shift in the backscatter level from before the reflection to after the reflection indicates how much light is lost at the fault or defect.

Many mechanical splices produce a Fresnel reflection. It is important to know where mechanical splices are in a fiber in order to keep from confusing them with faults. If there is backscatter after a reflective event, then the event is probably a mechanical splice. If there is only noise after a reflection, then it is probably the end of the fiber (see Figure 13).

Distance Measurements

The distance to a cursor is displayed on the screen. By simply moving a cursor to any point on the trace, you can read the distance to that point from the OTDR. Units of measurement can usually be selected to display distance in meters, feet, or miles. Keep in mind that you are measuring the length of the fiber itself (known as the optical distance), not the sheath length nor the ground distance along the cable run. There can be up to 2% more fiber length than sheath length since the fiber is given slack within the cable to allow for flexing of the cable. Also remember that there are usually coils of cable at splices and sometimes at other points along the cable route.

The measured distance to an event in a fiber, such as a mechanical splice, fusion

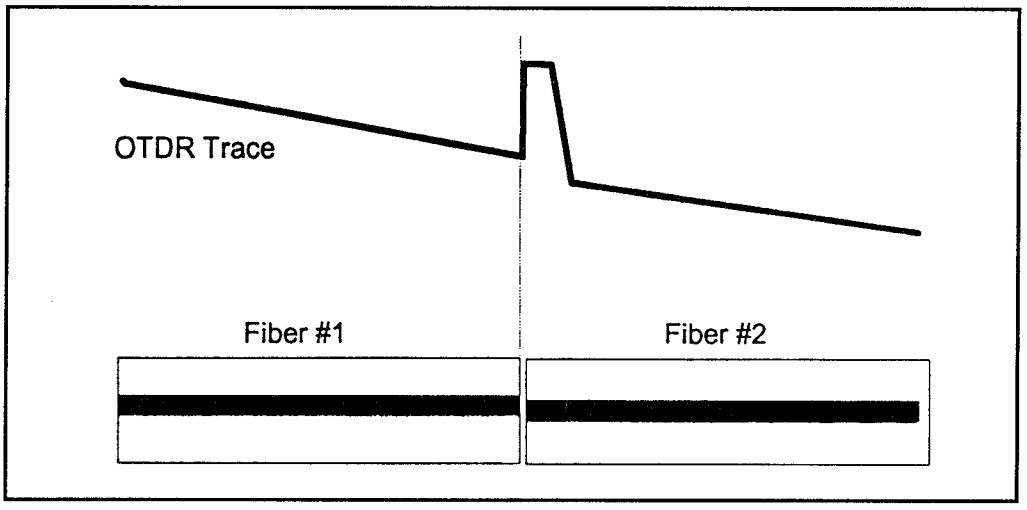

Figure 14: A reflective event location

splice, or fiber end, depends on where the cursor is placed. To get the most accurate distance measurements, you should always place the cursor on the last point of backscatter just prior to an event.

To accurately measure distances to an event in the fiber, place the cursor as follows:

- For a reflective event (such as a mechanical splice), place the cursor just before a reflection so the cursor does not ride up on the spike (see Figure 14).
- For a non-reflective event (such as a fusion splice or fiber kink), place the cursor at the point just before the trace drops or rises (see Figure 15).
- When two cursors are used, the OTDR will display the distance to each cursor from the OTDR as well as the distance between the two cursors. This feature is used to isolate sections of a fiber.

Loss Measurements

Loss is measured between two or more cursors. Loss can only be accurately measured from backscatter level to backscatter level. This means that both cursors must be on backscatter. Neither can be on a Fresnel reflection or in a dead zone.

Overall Loss

The end-to-end attenuation of a fiber can be measured by placing one cursor just to the right of the near-end dead zone, and another cursor just to the left of the

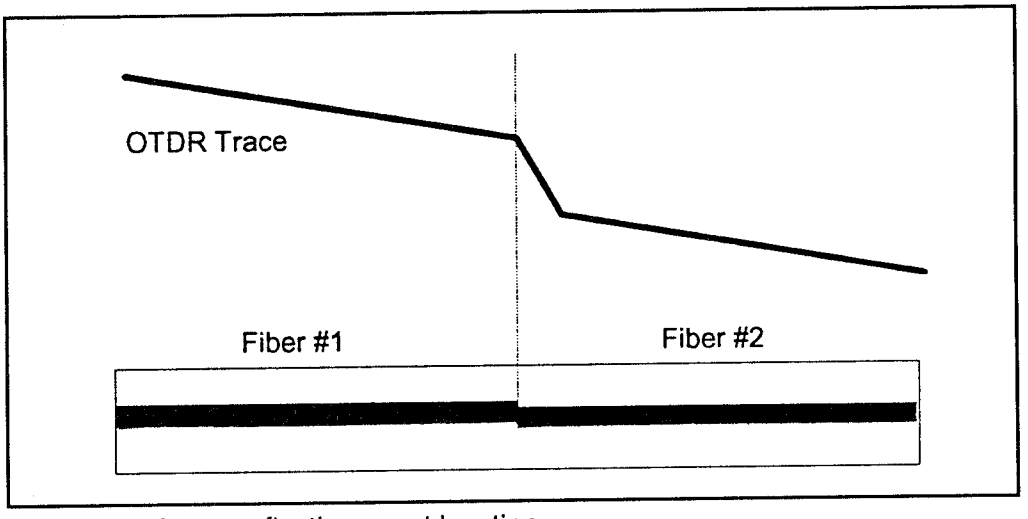

Figure 15: A non-reflective event location

far-end Fresnel reflection. The loss from cursor to cursor is read on the screen as shown in Figure 16. (Note: This measurement is not as complete as an end-to-end attenuation measurement made with a light source and power meter combination because it does not include the part of the fiber hidden in the initial dead zone, and it does not characterize the loss in the two end connectors.)

Section Loss

The loss in a section of fiber is measured by simply placing two cursors on the ends of the section to be measured and reading the level difference between the two.

Splice Loss

A splice is identified as a sudden shift in the backscatter level. There may also be a Fresnel reflection if it is a mechanical splice. A splice loss occurs at a single point in the fiber. A bend or point of stress may also show up as a splice loss. The loss at a single point can be measured in two ways: The 2-point method; or the LSA splice loss method.

The 2-point method is identical to the way section loss is measured, except that the two cursors are placed as close together as possible, with the left cursor set just at the point to be measured, and the right cursor set as close as possible to it, but still on the backscatter. The backscatter level at a point loss does not shift directly down, but rather has a slight roll-off to it. The length of the roll-off region is related to the pulse width (just like the distance taken up by a Fresnel

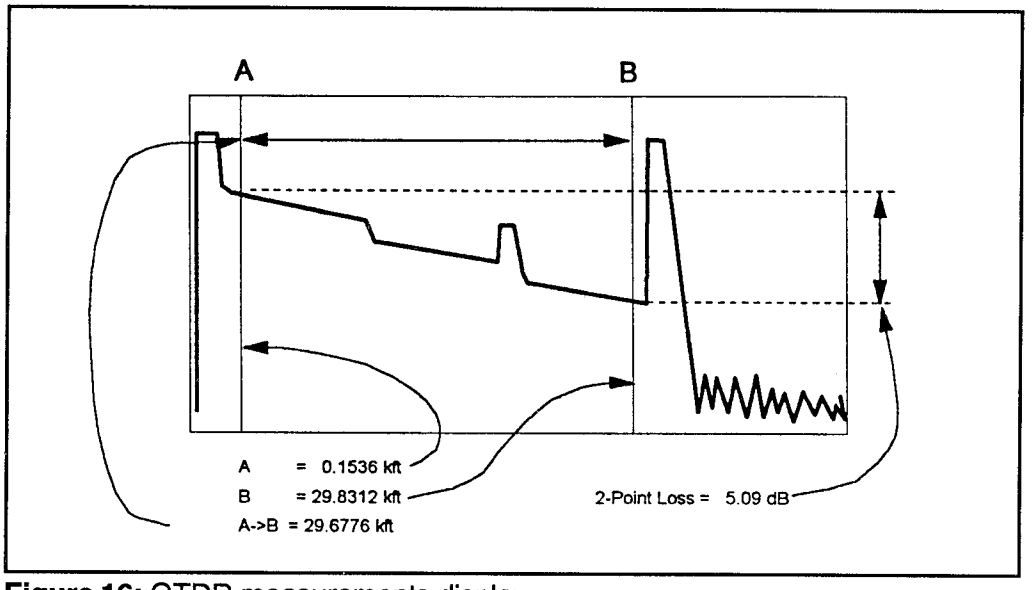

Figure 16: OTDR measurements display

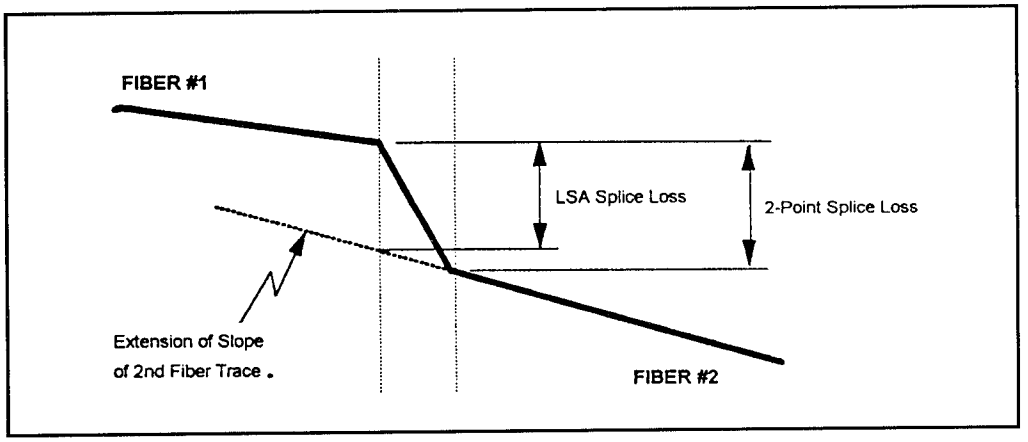

Figure 17: LSA vs. 2-point splice loss measurement

reflection). Since valid loss measurements can be taken only from backscatter to backscatter, the right cursor cannot use any part of this roll-off portion. This forces the right cursor to be placed farther out on the fiber than the next data point after the loss occurs. Consequently, the level measurement between the two points includes the loss occurring at the point plus an amount of loss (usually very small) that would normally occur over such a distance.

The LSA splice loss method uses a mathematical technique called *least squares approximation* to eliminate the excessive distance-induced loss found in the 2-point method. You simply place a cursor on the point to be measured and select "LSA Splice Loss" from the control panel. The OTDR then determines what the loss would be if the drop in backscatter level display was straight down instead of rolling off (see Figure 17).

Quality Factor (dB/km)

The measurement of loss per unit distance is a common method for determining a fiber's quality. Less loss per unit length means you will have a stronger signal at the receiver. The distance unit of measurement is usually kilometers (km). Fiber and fiber cable are ordered based on type (SM or MM) and loss per km at a specified wavelength. Typical values for singlemode fiber at 1300 nm are 0.4 to 0.6 dB/km. At 1550 nm this drops to 0.2 to 0.35 dB/km. For multimode fibers, the values range from 1.0 to 6.0 dB/km.

The quality factor is automatically calculated for a fiber when two cursors are set on the trace and the "dB/km" measurement is selected from the control panel. The OTDR simply displays the distance and loss between the two cursors, and

calculates the dB/km value by dividing the distance into the loss. In most OTDRs, if the distance units are set to display in feet, then the loss/distance unit will usually be dB/kft (kilofeet, or thousands of feet) instead of dB/km.

Reflectance

The amount of reflection at a connector, break or mechanical splice depends on how clean the break is, and how much the index of refraction changes when the light leaves the fiber. Most mechanical splices use an index-matching gel or fluid to reduce the amount of change. Smaller changes in the index of refraction produce smaller reflections. Some OTDRs can measure the amount of reflecting light automatically by placing one cursor just in front of the reflection and pressing the appropriate button on the control panel. Reflectance is measured in -dB (negative decibels), with a small negative value indicating a larger reflection than a large negative value. That is, a reflectance of -33 dB is larger than a reflectance of -60 dB. The larger reflectance will show up as a higher spike on the trace.

By measuring and comparing reflectance levels in mechanical splices over time, you can determine if there are changes occurring in the splices. Sometimes the reflectance level will increase even if the splice loss does not get worse. This could indicate the beginning stages of the failure of the mechanical splice. Increasing reflectance could mean that the fiber ends are starting to come apart (the splice is losing its grip), or the index matching fluid is starting to dry up or leak out. By knowing the level of reflectance at a connector, you can determine if a problem is occurring very close to the connector — perhaps at the pigtail splice or in the connector strain-relief part.

If the OTDR measures the distance to the far connector to be the correct length, but the reflectance is much lower than it was previously, the fiber might be fractured just inches short of the connector end-face, thus causing a lower reflection due to the ragged edges of the shattered glass. Since the connectors are the most handled part of the fiber, it is easy to damage the fiber right next to the connector and not realize it. An OTDR can be used to isolate this type of problem by using its reflectance measuring capabilities.

Measurement Problems

Even a trained and experienced OTDR operator may have difficulty interpreting a fiber trace at times. There are a few cases where it is almost impossible to get an exact distance or loss determination based on one measurement. In some extraordinary circumstances it may be necessary to test a fiber with different set-up conditions or from both ends in order to obtain meaningful results.

Non-Reflective Break

When a fiber is cut or broken, the end may shatter so that the angle at which the light hits the end may not reflect light at all. Also, the end of the fiber may become immersed in oil or grease, which may eliminate the Fresnel reflection. When this happens, the trace will suddenly fall off into the noise level. There may be a rounding-off of the backscatter where it falls off so that it may be difficult to judge where the fall-off point is.

The best method to determine the break point is to use a 2-point loss method to determine at which point the backscatter level drops off by 0.5 dB. The left cursor is placed as near to the end as possible, but still on the backscatter. Then the right cursor is moved in towards the left cursor until the loss between the two reads 0.5 dB. The actual end of the fiber should be very close to the point measured by the right cursor. To increase your confidence in this location, you can take the OTDR to the other end of the fiber and test back to the break from the other side. It is possible that the other side of the break will reflect some light. (Keep in mind that the fiber could be broken at more than one point.)

"Gain" Splice

Sometimes when two fibers are spliced together, the backscatter level at the splice point shifts *up* instead of *down*. At first glance this would appear to be a *gain* in power at the splice. The OTDR may even indicate a negative splice loss. What has happened is that the two fibers were mismatched: the second fiber has a higher backscattering coefficient than the first, and more light gets scattered back by it. The OTDR sensor reads this as a higher level than the end of the first fiber and plots the corresponding data points higher up on the screen. If the same splice is tested from the opposite direction, the OTDR would indicate a higher

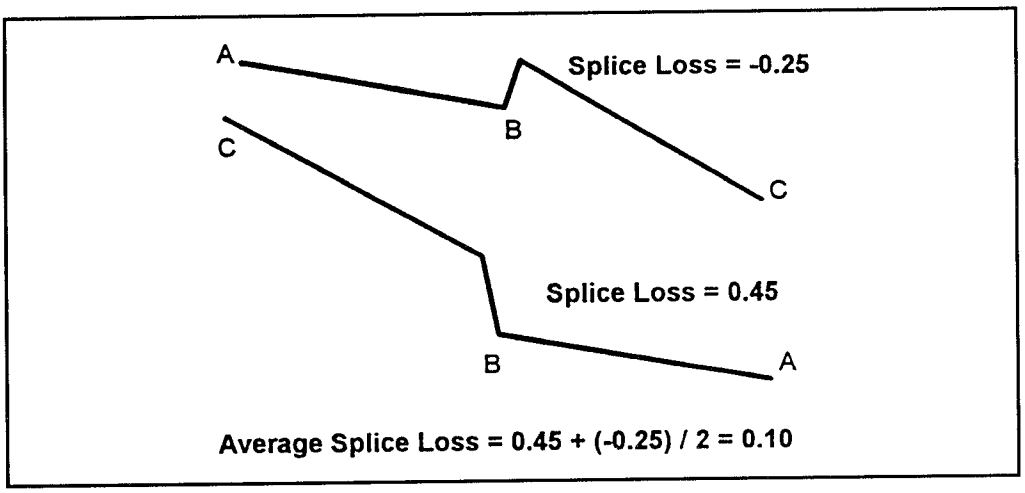

Figure 18: A splice tested from two different directions

normal loss than the amount of the *negative* loss. In this case, the true splice loss value is the average of the two readings. That is, if the "gainer" reads -0.25 dB, and the opposite direction reads 0.45 dB, then the actual splice loss is 0.1 dB (see Figure 18). Figure 18 also shows what a *gain* splice (top) looks like on an OTDR. Note that in a *gain* splice the slopes of the two fiber traces are different. The second fiber has a steeper slope than the first fiber, which indicates a higher backscatter level throughout the fiber. It would normally appear higher on the screen than the first fiber because it returns more light to the OTDR. A difference in index of refraction can produce different backscatter levels, and thus different slopes of the trace. The other possible cause of a gain is that the *mode field diameter* (which is related to the fiber's core size) is different in the two fibers, which causes more backscattering to come back from the second fiber. When a gain splice occurs, it is because the two fibers being spliced together are mismatched in some way.

Treatment of Gain Splice

The average of all splice losses in a fiber span (a span is one or more fibers spliced together to make a continuous fiber link from one connector end to the other) is usually the benchmark used in constructing a system. Gain splices can be confusing in determining splice loss averages since they usually are displayed as a negative loss on the OTDR. In order to determine the average splice loss value for a string of splices in a fiber span, you need to include the gain splice values along with the normal loss values. That is, you use *both* the positive and negative values as displayed by the OTDR in summing the total of all splice loss values. Then you divide by the number of splices summed.

The most accurate method of determining the average splice loss values in a fiber span is to make a bi-directional measurement of each splice — that is, measure the splice of fiber AB to fiber BC first from the fiber A end, then from the fiber C end. You individually average each splice loss, and then take the average of the entire span. This method is time consuming, and usually can be done only after the entire system has been spliced. The next best method is to take the one-directional average of all splices in a span using the splice values measured from the same direction only.

Ghost Reflections

Sometimes you will see a Fresnel reflection where you don't expect one — usually after the end of a fiber. This usually happens when a large reflection occurs in a short fiber. The reflected light actually bounces back and forth within the fiber, causing one or more false reflections to show up at multiple distances from the initial large (true) reflection. That is, if a large reflection occurs at 1,325

feet, and there is an unexpected reflection at 2,650 feet (twice the distance of the first) and another at 3,975 feet (three times the distance of the first), then it is likely the second and third reflections are *ghosts*. Here are a few "ghost-busting" techniques you can use to determine if ghosts are occurring and then to possibly eliminate them:

1. Measure the distance to the suspect reflection. Then place a cursor half this distance on the fiber. If an expected reflection is at the half-way mark, then the suspect is probably a ghost.

2. Suppress or reduce the known (true) reflection. By making the amount of returned power smaller, the ghost will also be reduced (or eliminated). To reduce the reflection, you can use index matching gel at the reflection, or reduce the amount of power going to the reflective point by selecting a shorter pulse width or by adding attenuation in the fiber before the reflection.

3. Change the Distance Range (Display Range) of the OTDR. In some OTDRs, a ghost is caused when the Distance Range is too short.

4. If a ghost seems to occur in the fiber, then measure the loss across the suspected reflection. A ghost will show no loss across it when you do a splice loss measurement.

Choosing an OTDR

In selecting an OTDR, you should ask yourself the following questions:

- What fiber type(s) and wavelength(s) will you be testing — singlemode, multimode, or both? Consider your short-term and long-term needs. If you might need to test different types and/or wavelengths later on, then look for modular systems where you can reconfigure the OTDR.

- What kind of measurements will you be making — loss, distance, reflectance, splice alignment? Make sure the OTDR you select can do all of these easily, quickly, and accurately. Look for a simple front panel control layout as well as a display that is easy to interpret.

- How often will you use the OTDR? If you will be using the instrument only when a problem occurs in the fiber, or for semi-annual maintenance evaluations, then you will need a simple unit with few front-panel controls, and a built-in HELP feature to refresh you on the basics. If you will be using

the unit frequently, then you will want more easily accessible controls for detail functions such as horizontal and vertical scale changes, pulse width changes, cursor movement, loss-mode switching, wavelength switching, and display orientation.

- How many different operators will be using the OTDR, and what will their training levels be? If several people will be expected to use it, the OTDR must be user-friendly and must be able to produce consistent results. For example, if one group uses the OTDR to build a fiber system, and another group uses it to maintain the system, each fiber should be tested with the same setup conditions each time to compare with the initial data. A built-in trace storage capability, with a trace overlay feature (to allow a current trace to be overlaid on a trace of the same fiber taken at the time of acceptance) will allow quick and accurate "before and after" comparison of the fiber's characteristics.

- What documentation will be required? If you need to keep permanent records of fiber tests, then choose an OTDR with a printer, plotter, and/or disk storage capability. Also consider the range and type of external printers and plotters supported by the unit. A good OTDR should give you the option to store trace information on a disk, print it out on an internal printer or plotter, or print or plot it to a dot-matrix printer, laser printer, ink-jet printer, or pen-plotter through RS-232 or GPIB interfaces.

- Will you use a computer to store or analyze data? A very efficient means of keeping trace data on file is to store the information in a computer. This will allow you to recall the traces at any time for comparison and analysis. Some OTDR manufacturers have programs that emulate an OTDR on a computer. These let you make the same loss and distance measurements on a laptop or desktop computer that you can make on an OTDR. If this option seems beneficial to your operations, then ask what type of computer the program runs on (for instance, IBM PC compatible), how much trace information can be stored, and if the trace can be expanded for close inspection after it has been recorded on a disk.

- How much support do you want from the vendor? Fiber optics testing can get confusing at times and you may need some fast answers from someone who has seen the problem before. Check to see if the OTDR supplier has a "help line" or some way to provide technical information. Is the local representative technically qualified and experienced enough to talk you through problems? Check the warranty repair turnaround policy — how long will you be without an OTDR if you have to send it in for repairs? What is the

manufacturer's reputation in the industry? In your area?

- Will you ever purchase other OTDRs? If compatibility between models is important, then determine if the data from a manufacturer's previous models are compatible with the current (and future) models. Is it easy to compare traces with data taken years ago on a different model? Some OTDR manufacturers completely change their models when they come out with a new one, and don't provide backward compatibility in features, operation, or trace data. If you change models, will you have to completely re-train your OTDR operators?

- One final consideration is whether or not an OTDR can be upgraded to add new features or improve operations. While most OTDRs must be taken out of service and sent to the factory for upgrades, some OTDRs can be upgraded in the field simply by placing a disk with the new operating software in the unit. Software upgrades can provide completely new features and improved performance without losing the use of the OTDR.

An OTDR Alternative

An alternative to conventional OTDRs is a class of instruments known as Feature Finders, Fault Finders, or Fault Locators. These fiber test instruments, which use the same basic technology as the OTDR, are typically battery-powered, lightweight, and small enough to be carried in one hand. All are designed to locate defects and breaks in optical fiber, and use the time-domain reflectometry method — just like OTDRs. The difference is in the operator interface and how they display information.

Fault Finding

Since one of the most critical measurements made on a fiber is locating a break or other service-affecting fault, this class of test sets provide at least a *fault finding* capability. The instrument will gather data on the fiber like an OTDR, but instead of displaying a trace, it will display a simplified diagram of the fiber and show where the end is located. The fault is found by a software analysis program that looks at the information obtained and saved during a scan of the fiber. If the data indicates a sudden drop in the backscatter level (usually associated with a Fresnel reflection) then it flags that point as the fiber end.

Various manufacturers have varying degrees of accuracy, reliability, and repeatability in making these software measurements. Some units allow you to view the data as a traditional OTDR trace to verify the software analysis. This can be a critical feature if your fibers are more than 10 to 20 miles long.

Since the operator interface is simplified, untrained people can make complex fiber measurements. In the simplest operating mode, you need only connect the fiber and press one button to completely characterize a fiber and locate the end. The display on these units is usually a "picket fence" line, with each picket indicating a feature (a defect or point loss) that exceeds a pre-set threshold. The last picket is the fiber end. A line displays the distance to the fiber end. Simple buttons are used to check the distance to the various defects or features (see Figure 19).

Feature Finder vs. OTDR Displays

The major difference between Feature Finders and OTDRs is that Feature Finders are not modular, so you must choose only one fiber type and wavelength combination. However, the data obtained by Feature Finders are compatible with OTDR data, and the two can be compared directly using OTDR emulator software on a computer. Additionally, both the trace data and automatic analysis data can be printed out for hard-copy documentation.

Advantages

The real advantages of the Feature Finder class of test sets is their portability, ease of use, and lower cost. Weighing about 10 pounds and costing about one-third that of full-function OTDRs, they are an excellent supplement to OTDRs. They often will perform significantly better than early OTDR models, some

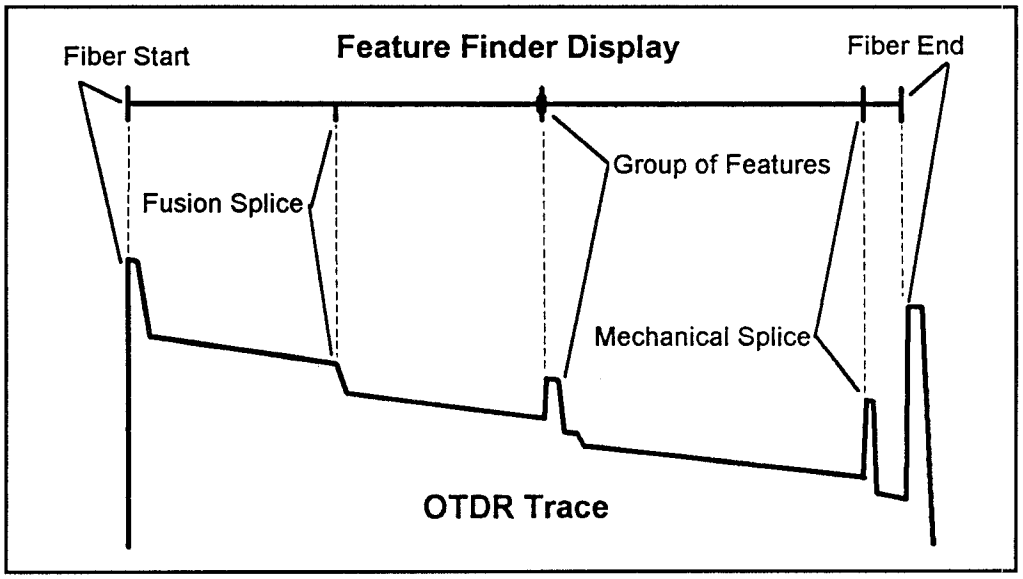

Figure 19: Feature finder vs. OTDR trace display

being capable of high resolution measurements (0.5 m data point spacing). The high resolution models can take splice loss readings within 100' of the instrument, and can make individual splice loss measurements of two splices about 50' apart further out in the fiber. These features alone make a Feature Finder an excellent tool for fault locating, routine fiber maintenance, and fiber restorations.

Considerations

In considering whether to purchase an OTDR or Feature Finder, consider your budget, the expertise and experience levels of the intended equipment users, the type of testing you will be doing, and how much fiber is in your network. Since fiber systems these days are relatively maintenance-free, you may not need the full capabilities of an OTDR. But when they *do* require attention, you should have test equipment that is both accurate and simple to use. A Feature Finder may be your best solution.

Mini-OTDRs

Small, battery-operated OTDRs offer the same capabilities (and sometimes more) as those found in full-sized models. The only limitations are the lack of modularity and the lack of a built-in printer. These are offset by the good long-range, high-resolution performance of the better units (no need to change modules to get longer range or higher resolution), and the ability to store trace data to a disk for printout from a computer. These mini-OTDRs are typically single- or dual-wavelength units that include the automatic trace analysis found in Feature Finders. The most complete and useful of the mini units include built-in MS-DOS type floppy disk storage and a built-in optical power meter.

In choosing a mini-OTDR, look for a large, backlit, easy to read screen; an automatic ranging and analysis feature for "one-button testing"; an internal data storage device (disk drive) so you can store test results and setup information; and the ability both to measure long fibers and perform high-resolution tests.

Troubleshooting Examples

Listed below are several fiber testing problems and how to solve them.

Determine Continuity to Fiber End
The fiber must be able to pass light from the transmitter to the receiver. This test determines if light is making the trip from one end to the other. It is the most basic and simple test. You can use a simple optical power meter to check for light at the receive end (assuming there is light going into the fiber at the other end), or you can check the overall length of the fiber with an OTDR or Feature Finder.

Locate Break in Fiber Cable
Finding where a fiber is broken is the first step to getting a system repaired and working again. Since the fiber cable is typically hidden from view, a break usually must be detected with test equipment. A visible laser source is good for detecting breaks in the fiber close to the ends. Use an OTDR, Feature Finder, or Fault Locator to detect breaks that are outside of the end equipment site.

Identify Fiber to Be Spliced
It is often difficult to distinguish which single fiber out of many in a cable is to be spliced next. Since the system's light is invisible to the human eye, and often the fiber colors at a splice point don't match with the colors or numbers at the office ends of the cable, the task of simply determining which fiber should be spliced can be very hard to accomplish without some type of test equipment. Both the person doing the splicing *and* the person doing the testing must be working on the same fiber in order to reduce the time it takes to complete and test a splice. Light from a visible laser can be seen coming out of a fiber end by the human eye several miles down a fiber. Alternately, at the splice point, you can connect a fiber to an optical power meter (using a raw fiber adapter) and test for the presence of light injected into the fiber from the equipment end. The person at the equipment end can determine if the person at the splice point is working on a particular fiber by putting an OTDR or Feature Finder on the fiber and observing the trace in real-time for changes in the end reflection while the fiber is being cleaned, cleaved, and spliced.

Determine Continuity Through Splice
In building or restoring a fiber system, you have to know that the splice just made is of sufficient quality to allow light to pass between the two fibers. It's not enough to know that light injected just before the splice makes it to a point just after the splice. You also must be assured that the light is making it all the way to the next splice point or the end of the fiber cable. Continuity through a splice is checked by looking through the splice to the next open point in the fiber with an OTDR or with a light source and detector. You can also clamp on to a point beyond the splice with a fiber identifier and optical power meter to check for the presence of light. If the splice point is only a few miles from the equipment end, then a visible laser could indicate visually if light is passing through the splice.

Measure Splice Loss
The quality of a splice is measured in dB. Splice losses must be kept low in order to allow enough light to get through to the system detector. Typical permanent splice losses are under 0.5 dB. Temporary splices for restorations must only be good enough to pass light through to the receiver. True measurement of splice

loss can only be done by comparing the amount of light just before the splice to just after the splice. OTDR-type test equipment is the only kind that is designed to make a true splice loss measurement. A visible laser can be used as a rough *go/no-go* indication by seeing how much light leaks out at the splice.

Measure Fiber Loss (End-to-End)
The "bottom line" in a fiber system is whether the detector can read the light that reaches it. Fiber systems are designed with a specific *loss budget* that must be met for the system to work properly. For a given amount of light injected into the fiber by the transmitter, there is a maximum amount of light loss that can be tolerated before the signal is too weak at the receive side for the detector to detect. End-to-end loss takes into account the normal loss in the fiber, the loss at each of the splices, and any loss due to defects or tight bends in the fiber cable. Overall loss is measured most accurately with a stable light source of known power and an optical power meter. An OTDR or Feature Finder will also measure overall loss, but not as accurately as a source/meter combination.

Measure Fiber Quality (dB/km)
The quality of a fiber is measured in the amount of loss (in dB) it has per thousand meters (km). The lower this dB/km value, the longer the system can be with the same loss budget, because the fiber attenuates less light. Fiber cable is usually ordered from the manufacturer with a specified dB/km value. Singlemode fiber has about 0.25 to 0.5 dB/km loss, and multimode fiber typically measures from 1 to 6 dB/km loss (these values depend on the wavelength of the light, the fiber diameter, and other factors). A dB/km measurement is made by testing for overall (end-to-end) loss, and dividing the result by the length (in kilometers) of the fiber.

Measure Reflectance of Splice and Connector
Reflectance is the amount of light that bounces off a fiber end at a mechanical splice or connector. If enough light is reflected back into the transmitter, the system performance can be affected — particularly for SONET (high-speed digital systems) and for analog video systems. Reflectance is measured in -dB and should be -40 dB or lower (-50 dB is lower than -40 dB) in order to assure trouble free operations in SONET and video systems. Reflectance of splices and connectors can only be made with an OTDR or Feature Finder.

Document Results (Print or Record to Disk)
In order to properly maintain a fiber system, you should know what it was like when it was at its best condition, that is, when it was first built and turned up. By comparing routine maintenance results to the original records of end-to-end loss,

splice loss, reflectance, and so forth, you can tell if any part of the system is degrading. Documentation ranges from writing the results on a slip of paper to obtaining a printout from the test set, to storing the test results on a computer disk for later viewing or analysis on the computer.

Table 2 can be used to determine the type of equipment needed to perform the testing tasks just listed. The bottom chart indicates the maximum range and the approximate price for each equipment group.

An Overview of Commercially Available Equipment

Listed below is a summary of commercially available equipment for testing fiber optic cable systems.

Low-Cost Power Meter
This is an easy to use basic optical power meter that measures both singlemode and multimode fiber systems. It measures the optical power emitted by optical transmitters and is used with a light source to measure fiber loss.

Full-Feature Power Meter
Same as the low-cost model, but with additional features such as Store Reference Level, and readout in Watts, dBm, and dB. This instrument typically stores up to 100 measurements in memory for later print out.

Visible Laser Source
A stable light source that emits a bright red light into a fiber. The light can be seen coming out the far end, and can be seen at the point of a defect or tight bend in fiber. It is used to locate faults in fiber patch cords and pigtail splices that are within an OTDR's initial "dead zone."

Fault Locator
Typically a simple 2-button, weather-proof instrument, a Fault Locator will accurately locate the end of a fiber. It is a one-ended test set, so you only need access to one fiber end. It displays in miles, kilometers, or feet. You can also locate high-loss splices within the fiber by changing the setup.

Feature Finder
This instrument quickly and accurately locates the fiber end, splices, and defects in a fiber. It can also display the OTDR trace of the fiber. Its real-time display can be used to observe splicing in progress or to positively identify the fiber being

TASK	Power Meter	Visible LASER	Fault Locator	Feature Finder	Mini-OTDR	OTDR	Remote OTDR
Continuity to End	w/Source	●	●	●	●	●	●
Locate Break		●	●	●	●	●	●
ID Fiber	w/Source	●		●	●	●	●
Continuity Thru Splice		●	●	●	●	●	●
Measure Splice Loss				●	●	●	●
Measure End-End Loss	w/Source			●	●	●	●
Measure dB/Km					●	●	●
Measure Reflectance				●	●	●	●
Document Work	(●)			(●)	●	●	●

Marks in parentheses (●) indicate need for external equipment — like a printer — to perform the task.

Approx. Max. Range (Mi.)	>80	<10	25	40	60	100+	100+
Approx. Cost Low	500	<1,500	<5,000	8,500-	10,000	25,000	10,000
High	<1,200			<17,000	<18,000	<40,000	

Table 2: Equipment needed to perform troubleshooting tasks

worked on at a splice point. It can transfer its test results to a computer, or print out to a printer.

Mini-OTDR
This instrument is a battery-operated OTDR at half the price. It automatically analyzes the fiber test data to locate the fiber end, splices, and defects. You can see fibers over 50 miles long, yet still see close-in splices with the standard high-resolution capability. It typically has a built-in full-function optical power meter and an integral 1.44 MB disk drive to store test data and retrieve old test results and instrument setups.

OTDR With Optical Modules
OTDRs are in wide use among telephone companies, long-distance carriers, CATV operators, and private fiber network users. Anywhere there is fiber in use, you are likely to find an OTDR. OTDRs are designed for the rugged field environment and can be used to test nearly any type and length of optical fiber used in the telecommunications field. Some models can see fibers longer than 100 miles, yet still measure a vault splice less than 100' away.

Remote OTDR
The concept of being able to test your entire fiber optics network from one location is appealing. Add the ability to associate a point on the ground with various key points along the optical fiber, and you come up with a unique method to quickly respond to fiber problems by dispatching a repair crew directly to the problem site—not to a test point at one end of the fiber cable. When every minute counts in restoring critical fiber systems, a remote OTDR can save hours of needless down time. This instrument can be accessed on-site or from any other location that simply has a computer and a data/voice link to the site.
—*Vaughn D. Martin*

The author wishes to thank Laser Precision and John Lidh, the author of an ap note from which this article was adapted, with permission.

Table of Contents

Section 12
Reference Materials

Table of Contents

12/A *Addresses*
12/A - MA *Manufacturer Addresses*
12/A - MA - EE *Electronic Equipment and Supplies*
12/A - MA - TE *Test Equipment*
12/A - MA - TV *TV Receivers and Monitors*
12/A - MA - VP *Video Products*

12/I *Indices*
12/I - A *Abbreviations*
12/I - ERM *Electronics Repair Manual Index*
12/I - IC *Integrated Circuits*
12/I - IC - A *Audio Devices*
12/I - PC *Personal Computers*
12/I - PC - POST *POST Screen Error Messages*

12/S *Schematics*
12/S - A *An Introduction*
12/S - Amp *Amplifier*
12/S - Amp - Ken *Kenwood*
12/S - Amp - Ken - KAC-8020 *KAC-8020*

12/S - Cam *Camcorders*
12/S - Cam - Pan *Panasonic*
12/S - Cam - Pan - PV-602, 4, 10 *PV602, 4, 10*

12/S - CD *Compact Disc Player*
12/S - CD - Hi *Hitachi*
12/S - CD - Hi-DA-C60 *DA-C60*

Table of Contents

12/S - CT *Cordless Telephones*
12/S - CT - Pan *Panasonic*
12/S - CT - Pan - KX-T3000 *KX-T3000*

12/S - Tel *Telephones*
12/S - Tel - Pan *Panasonic*
12/S - Tel - Pan-KX-T1423/-T2325 *KX-T1423/KX-T2325*

12/S - TV *TVs*
12/S - TV - RCA *RCA*
12/S - TV - RCA - CTC140 *CTC140*

12/S - VCR *VCRs*
12/S - VCR - Hi *Hitachi*
12/S - VCR - HiVT-34A *VT-34A*
12/S - VCR - Pan *Panasonic*
12/S - VCR - Pan - PV-4860, 2; VH5685 *PV-4860, 2; VH5685*
12/S - VCR - SO *Sony*
12/S - VCR - SO-VO-5800 *VO-5800*

12/A - MA
Manufacturer Addresses

12/A - MA - EE
Electronic Equipment and Supplies

AD ELECTRONICS
Blissfield, MI
1-800-843-6659

ALMAC STROUM ELECTRONICS
Bellevue, WA
1-800-426-1410

ALSTON ELECTRIC SUPPLY
Pensacola, FL
1-800-521-1043

AMERICAN ANTENNA
Elgin, IL
1-800-323-5608

AMERICAN DESIGN COMPONENTS
Moonachie, NJ
1-800-227-2185

AMERICAN TECHNOLOGY LABS
Stevenville, MT
1-800-223-9758

AZ-TECH ASSEMBLIES INC
TUCSON, AZ
Georgetown, KY
1-800-624-4827

B & B INTERNATIONAL ELECTRONICS
Minneapolis, MN
1-800-826-7623

CAPACITOR SALES
Sunnyvale, CA
1-800-538-8587

CIRCUIT SPECIALIST OF ARIZONA
P.O. Box 3047
Scottsdale, AZ 85271-3047
WAREHOUSE
220 S. Country Club Drive
Mesa, AZ 85210
1-800-528-1417
Fax: 1-602-464-5824

COMPUADD COMPUTER CORPORATION
12303 Technology Blvd.
Austin, Texas 78727
1-800-627-1967

ELECTRONIC PRODUCT SALES
Dayton, OH
1-800-638-6558

GOLDSTAR INTERNATIONAL ELECTRONICS
Lyndhurst, NJ
1-800-562-0244

HARD DRIVE INTERNATIONAL
1912 W. 4th St.
Tempe, AZ 85281
1-800-767-3475
1-602-350-1128
Fax: 1-602-829-9193

INSIGHT COMPUTERS
1912 W. 4th St.
Tempe, AZ 85281
1-800-767-7600
1-602-350-1176
Fax: 1-602-829-9193

PREMIUM PARTS PLUS
PO Box 28
Whitewater, WI 53190
1-800-558-9572

MEGATRON ELECTRONICS
Irvine, CA
1-800-528-5014

VACUUM TUBE INDUSTRIES
Brockton, MA
1-800-528-5014

12/A
Addresses

12/A - MA Manufacturer Addresses
12/A - MA - EE Electronic Equipment and Supplies

12/A - MA
Manufacturer Addresses

12/A - MA -TE
Test Equipment

AUDIO TEST ALIGNMENT AND MEASUREMENT

AMBER ELECTRO DESIGN
6969 Trans-Canada Highway
St. Laurent, Que.
Canada H4T1V8
514-333-8748
800-361-3697

ARIEL CORP.
433 River Road
Highland Park, NJ 08904
201-249-2900
Fax: 201-249-2132

AUDIO PRECISION
P.O. Box 2209
Beaverton, OR 97075
503-627-0832
800-231-7350
Fax: 503-641-8906

B & B SYSTEMS, INC.
28111 N. Ave. Stanford
Valencia, CA 91355
805-257-4853
800-345-1256
Fax: 805-257-8065

B & K PRECISION MAXTEC
6470 W. Cortland
Chicago, Il 60635
312-889-1448
Fax: 312-794-9740

BOLAND COMMUNICATIONS
24386 Totuava Circle
Mission Viejo, CA 92691
714-951-7557
Fax:714-588-1070

DELTA ELECTRONICS, INC.
5730 General Washington Drive
Alexandria, VA 22312
703-354-3350
800-833-5828
Fax: 703-354-0216

DORROUGH ELECTRONICS
160 First St. S.E.
New Brighton, MN 55112-7894
612-633-1742
Fax: 612-633-7025

FM SYSTEMS, INC.
3877 S. Main St.
Santa Ana, CA 92707
714-979-3355
800-235-6960
Fax: 714-979-0913

KAY ELEMETRICS CORP.
P.O. Box 2025
Pine Brook, NJ 07058
201-227-2000
Fax: 201-227-7760

MARCONI INSTRUMENTS, INC.
3 Pearl Court
Allendale, NJ 07401
201-934-9050

MULTIDYNE ELECTRONICS, INC.
244 Bayville Ave.
Bayville, NY 11709
516-628-1495
800-765-8200
Fax: 516-628-1496

NEUTRIK USA, INC.
195-S5 Lehigh Ave.
Lakewood, NJ 08701
908-901-9488
Fax: 908-901-9608

SENNHEISER ELECTRONIC CORP.
P.O. Box 987
Old Lyme, CT 06371
203-434-9190
Fax: 203-434-1759

TEKTRONIX
P.O. Box 500, M/S 58-699
Beaverton, OR 97077
503-627-4486
Fax: 503-627-4486

TENTEL CORP.
4475 Golden Foothill Parkway
El Dorado Hills, CA 95630
916-939-4005
800-538-6894
Fax: 916-939-4114

AUDIO SIGNAL GENERATORS

AMBER ELECTRO DESIGN
6969 Trans-Canada Highway
St. Laurent, Que.
Canada H4T1V8
514-333-8748
800-361-3697

ASACA/SHIBASOKU CORP.
12509 Beatrice
Los Angeles, CA 90066
213-827-7144
Fax: 213-306-1382

AUDIO PRECISION
P.O. Box 2209
Beaverton, OR 97075
503-627-0832
800-231-7350
Fax: 503-641-8906

B & K PRECISION MAXTEC INTERNATIONAL PRODUCTS DIV.
6470 W. Cortland
Chicago, IL 60635
312-889-1448
Fax: 312-794-9740

BECKMAN INDUSTRIAL CORP. INSTRUMENTATION PRODUCTS DIV.
3883 Ruffin Road
San Diego, CA 92123
619-495-3200
800-854-2708
Fax: 619-268-0172

RICHARD W. BURDEN ASSOCIATES
20944 Sherman Way
Canoga Park, CA 91303
818-340-4590

DBX, A DIV. OF AKG ACOUSTICS, INC.
1525 Alvarado St.
San Leandro, CA 94577
510-351-3500
800-243-7885
Fax: 510-351-0500

DELTA ELECTRONICS, INC.
5730 General Washington Drive
Alexandria, VA 22312
703-354-3350
800-833-5828
Fax: 703-354-0216

LEADER INSTRUMENTS CORP.
380 Oser Ave.
Hauppauge, NY 11788
516-231-6900
800-645-5104
Fax: 516-231-5295

LEITCH INC.
825-K Greenbrier Circle
Chesapeake, VA 23320
804-424-7920
800-231-9673
Fax: 804-424-0639

NEUTRIK USA, INC.
195-S5 Lehigh Ave.
Lakewood, NJ 08701
908-901-9488
Fax: 908-901-9608

SENNHEISER ELECTRONIC CORP.
P.O. Box 987
Old Lyme, CT 06371
203-434-9190
Fax: 203-434-1759

TEKTRONIX
P.O. Box 500, M/S 58-699
Beaverton, OR 97077
503-627-4486
Fax: 503-627-4486

VIDEOTEK INC.
243 Shoemaker Road
Pottstown, PA 19464
215-327-2292
Fax: 215-327-9295

AUDIO TAPE, TEST & ALIGNMENT

FIDELIPAC CORP.
P.O. Box 808
Moorestown, NJ 08057
609-235-3900
Fax: 609-235-7779

GENEVA GROUP OF COMPANIES, INC.
9909 S. Shore Drive
Plymouth, MN 55441
612-546-5620
800-328-6795 Ext. 382
Fax: 612-546-0933

NEUTRIK USA, INC.
195-S5 Lehigh Ave.
Lakewood, NJ 08701
908-901-9488
Fax: 908-901-9608

TENSION GAUGES

TENTEL CORP.
4475 Goldern Foothill Parkway
El Dorado Hills, CA 95630
916-939-4005
800-538-6894
Fax: 916-939-4114

TEST EQUIPMENT — MISCELLANEOUS

OSCILLOSCOPES

B & K PRECISION MAXTEC
6470 W. Cortland
Chicago, Il 60635
312-889-1448
Fax: 312-794-9740

Leader Instruments Corp.
380 Oser Ave.
Hauppauge, NY 11788
516-231-6900
800-645-5104
Fax: 516-231-5295

RISER-BOND INSTRUMENTS
5101 N. 57th St.
Lincoln, NE 68507
402-466-0933
800-688-8377
Fax: 402-466-0967

SENCORE ELECTRONICS
3200 Sencore Drive
Sioux Falls, SD 57107
605-339-0100
Fax: 605-335-6379

TEKTRONIX
P.O. Box 500, M/S 58-699
Beaverton, OR 97077
503-627-4486
Fax: 503-627-4486

TOOLS

BECKMAN INDUSTRIAL CORP.
INSTRUMENTATION PRODUCTS DIV.
3883 Ruffin Road
San Diego, CA 92123
619-495-3200
800-854-2708
Fax: 619-268-0172

CAIG LABS, INC.
16744 W. Bernardo Drive
San Diego, CA 92127
619-451-1799
Fax: 619-451-2799

CIRCUIT SPECIALIST, INC.
P.O. Box 3047
Scottsdale AZ 85271-3047
WAREHOUSE
220 S. Country Club Drive
Mesa, AZ 85210
1-800-528-1417
Fax: 1-602-464-5824

CONTACT EAST
335 Willow St. S.
North Andover, MA 01845
508-682-2000
800-225-5370
Fax: 508-688-7829

GC-THORSEN
P.O. Box 1209
Rockford, IL 61105-1209
815-968-9661
800-435-2931
Fax: 800-527-3436

JENSEN TOOLS, INC.
7815 S. 46th St.
Phoenix, AZ 85044-5399

MATH ASSOCIATES, INC.
2200 Shames Drive
Westbury, NY 11590
516-334-6800
Fax: 516-334-6473

MERIDIAN TECHNOLOGIES
80 Mott Ave.
Inwood, NY 11696
516-371-9300
Fax: 516-371-9301

OPTICAL DISC CORP.
12150 Mora Drive
Santa Fe Springs, CA 90670
213-946-3050
Fax: 213-946-6030

TROMPETER ELECTRONICS, INC.
P.O. Box 5069
Westlake Village, CA 91362-4047
818-707-2020
Fax: 818-706-1040

VIDEO SIGNAL GENERATORS

ASACA/SHIBASOKU CORP.
12509 Beatrice
Los Angeles, CA 90066
213-827-7144
Fax: 213-306-1382

B & K PRECISION MAXTEC
INTERNATIONAL PRODUCTS DIV.
6470 W. Cortland
Chicago, Il 60635
312-889-1448
Fax: 312-794-9740

BECKMAN INDUSTRIAL CORP.
INSTRUMENTATION PRODUCTS DIV.
3883 Ruffin Road
San Diego, CA 92123
619-495-3200

BPI/PORTA-PATTERN
15755 South 169 Highway
Olathe, KS 66062
913-780-4844
Fax: 913-780-5148

COLORADO VIDEO INC.
P.O. Box 928
Boulder, CO 80306
303-530-9580
Fax: 303-530-9569

DIGITAL PROCESSING SYSTEMS
55 Nugget Ave., Unit 10
Scarborough, Ont.
Canada M1S 3L1
416-754-8090

ENSEMBLE DESIGNS
P.O. Box 993
Grass Valley, CA 95945
916-478-1830
Fax: 916-478-1832

FOR.A CORP. OF AMERICA
313 Speen St.
Natick, MA 01760
508-650-3902
800-822-3672
Fax: 508-651-8729

GASLIGHT VIDEO
630 N. Tustin St., Suite 1516
Orange, CA 92667-7100
714-744-4190
Fax: 714-744-1729

HORITA
P.O. Box 3993
Mission Viejo, CA 92690
714-489-0240

LEADER INSTRUMENTS CORP.
380 Oser Ave.
Hauppauge, NY 11788
516-231-6900
800-645-5140
Fax: 516-231-5295

LEITCH INC.
825-K Greenbrier Circle
Chesapeake, VA 23320
804-424-7920
800-231-9673
Fax: 804-424-0639

LENCO ELECTRONICS, INC.
753 Enterprise St.
Cape Girardeau, MO 63701
314-334-4433

MAGNI SYSTEMS, INC.
9500 S.W. Gemini Drive
Beaverton, OR 97005
503-626-8400
800-624-6465
Fax: 503-626-6225

MARCONI INSTRUMENTS INC.
3 Pearl Court
Allendale, NJ 07401
201-934-9050

MULTIDYNE ELECTRONICS INC.
244 Bayville Ave.
Bayville, NY 11709
516-628-1495
800-765-8200
Fax: 516-628-1496

NETWORK TECHNOLOGIES INC.
7322 Pettibone Road
Chagrin Falls, OH 44022
216-543-1646
800-742-8324
Fax: 216-543-5423

OPTICAL DISC CORP.
12150 Mora Drive
Santa Fe Springs, CA 90670
213-946-3050
Fax: 213-946-6030

SENCORE ELECTRONICS
3200 Sencore Drive
Sioux Falls, SD 57107
605-339-0100
Fax: 605-335-6379

TEKTRONIX
P.O. Box 500, M/S 58-699
Beaverton, OR 97077
503-627-4486
Fax: 503-627-4486

VIDEOTEK INC.
243 Shoemaker Road
Pottstown, PA 19464
215-327-2292
Fax: 215-327-9295

12/A - MA
Manufacturer Addresses

12/A - MA - TV
TV Receivers and Monitors

INSTANT REPLAY
2601 S. Bayshore Drive, Suite 1050
Coconut Grove, FL 33133
305-854-8777
800-749-8779
Fax: 305-858-9053

JVC PROFESSIONAL PRODUCTS CO.
41 Slater Drive
Elmwood Park, NJ 07407
201-794-3900
Fax: 201-523-2077

JVC CORPORATION
EAST COAST
I-80 at New Maple Ave.
Pinebrook, NJ 07058
201-882-0900
1-800-247-3608

JVC CORPORATION
WEST COAST
1111 West Artesia Blvd.
Compton, CA 90220
213- 537-6020
1-800-421-6991

JVC CORPORATION
MIDWEST BRANCH
2250 Lively Blvd.
Elk Grove, IL 60007
312- 364-9300
1-800-323-0586

JVC CORPORATION
SOUTHWEST BRANCH
407 Garden Oaks Blvd.
Houston, TX 77018
713-694-0666
1-800-231-6839

MITSUBISHI ELECTONICS AMERICA, PRO ELECTRONICS DIV.
800 Cottontail Lane
Somerset, NJ 08873-6759
908-563-9889
800-733-8439
Fax: 908-563-0713

NEC TECHNOLOGIES INC.
PROFESSIONAL SYSTEMS DIV.
1255 Michael Drive
Wood Dale, IL 60191-1094
708-860-9500
800-366-3632
Fax: 708-860-5812

PANASONIC COMMUNICATIONS & SYSTEMS CO.
One Panasonic Way
Secaucus, NJ 07094
201-348-7671
800-524-0864
Fax 201-392-6558

SHARP ELECTRONICS CORP. PRO
Sharp Plaza
Mahwah, NJ 07430
201-529-8662
Fax: 201-512-2015

SONY BUSINESS & PROFESSIONAL GROUP
1600 Queen Anne Road
Teaneck, NJ 07666
201-833-5200
800-635-7669

TOSHIBA VIDEO SYSTEMS DIV. TACP
82 Totowa Road
Wayne, NJ 07470
201-628-8000
Fax: 201-628-8755

VIDEOTEK INC.
243 Shoemaker Road
Pottstown, PA 19464
215-327-2292
Fax: 215-327-9295

12/A
Addresses

12/A - MA Manufacturer Addresses
12/A - MA - TV TV Receivers and Monitors

12/A - MA
Manufacturer Addresses

12/A - MA - VP
Video Products

CAMCORDERS — BETA, SVHS, VHS, 8MM, HI-8

AMPEX CORP. MARKETING SALES SERVICE
401 Broadway
Redwood City, CA 94063-3199
415-367-3055
Fax: 415-367-2320

BTS BROADCAST TELEVISION SYSTEMS
4827 N. Sepulveda Blvd.
Sherman Oaks, CA 91403
818-972-8000
Fax: 818-986-1210

CANON US BROADCAST EQUIPMENT DIV.
610 Palisade Ave.
Englewood Cliffs, NJ 07632
201-816-2900

IKEGAMI ELECTRONICS (USA) INC.
37 Brook Ave.
Maywood NJ 07607
201-368-9171
Fax: 201-569-1626

JVC PROFESSIONAL PRODUCTS, CO.
41 Slater Drive
Elmwood Park, NJ 07407
201-794-3900
Fax: 201-523-2077

JVC CORPORATION EAST COAST
I-80 at New Maple Ave.
Pinebrook, NJ 07058
(201) 882-0900
800-247-3608

JVC CORPORATION WEST COAST
1111 West Artesia Blvd.
Compton, CA 90220
(213) 537-6020
800-421-6991

JVC CORPORATION MIDWEST BRANCH
2250 Lively Blvd.
Elk Grove, IL 60007
(312) 364-9300
800-323-0586

JVC CORPORATION SOUTHWEST BRANCH
407 Garden Oaks Blvd.
Houston, TX 77018
(713) 694-0666
800-231-6839

PANASONIC COMMUNICATIONS & SYSTEMS CO.
Audio/Video Systems Group
One Panasonic Way
Secaucus, NJ 07094
201-348-7671
800-524-0864
Fax: 201-392-6558

RICOH CORP. CONSUMER/ PRODUCTS GROUP
180 Passaic Ave.
Fairfield, NJ 07004
201-882-2000
800-225-1899
Fax: 201-808-3608

SHARP ELECTORNICS CORP.
Professional Products Div.
Sharp Plaza
Mahwah, NJ 07430
201-529-8662
Fax: 201-512-2015

VIDEO RECORDERS — SVHS, VHS

BURLE INDUSTRIES, INC.
Security and Tube Div.
1000 New Holland
Lancaster, PA 17601-5688
717-295-6123
800-326-3270
Fax: 717-295-6097

DNF Industries
1032 N. Sweetzer Ave., Suite 212
West Hollywood, CA 90069
213-650-5256
Fax: 213-650-6639

DP Electronics
152 Floyd Ave.
Bloomfield, NJ 07003
201-748-6334
Fax: 201-743-3195

HITACHI DENSHI AMERICA, LTD.
150 Crossways Park Drive
Woodbury, NY 11797
516-921-7200

JVC PROFESSIONAL PRODUCTS CORP.
41 Slater Drive
Elmwood Park, NJ 07407
201-794-3900
Fax: 201-523-2077

JVC CORPORATION
EAST COAST
I-80 at New Maple Ave.
Pinebrook, NJ 07058
(201) 882-0900
800-247-3608

JVC CORPORATION
WEST COAST
1111 West Artesia Blvd.
Compton, CA 90220
(213) 537-6020
800-421-6991

JVC CORPORATION
MIDWEST BRANCH
2250 Lively Blvd.
Elk Grove, IL 60007
(312) 364-9300
800-323-0586

JVC CORPORATION
SOUTHWEST BRANCH
407 Garden Oaks Blvd.
Houston, TX 77018
(713) 694-0666
800-231-6839

MITSUBISHI ELECTONICS AMERICA, PRO ELECTRONICS DIV.
800 Cottontail Lane
Somerset, NJ 08873-6759
908-563-9889
800-733-8439
Fax: 908-563-0713

NEC TECHNOLOGIES INC.
PROFESSIONAL SYSTEMS DIV.
1255 Michael Drive
Wood Dale, IL 60191-1094
708-860-9500
800-366-3632
Fax: 708-860-5812

PANASONIC COMMUNICATIONS & SYSTEMS CO.
One Panasonic Way
Secaucus, NJ 07094
201-348-7671
800-524-0864
Fax: 201 -392-6558

SANYO FISHER CORP.
INDUSTRIAL VIDEO DIV.
1200 W. Artesia Blvd.
Compton, CA 90220
213-605-6527
Fax: 213-605-6529

SHARP ELECTRONICS CORP.
PROFESSIONAL PRODUCTS.
Sharp Plaza
Mahwah, NJ 07430
201-529-8662
Fax: 201-512-2015

12/I - A
Abbreviations

A

a	anode
A	Ampere
ABC	American Broadcasting Company
a.c. / AC	Anti-clockwise
ADC	analog-to-digital converter
Ae.	aerial
a.f. / AF	audio frequency
AF	audio frequency
a.f.c. / AFC	automatic frequency control
a.g.c. / AGC	automatic gain control
AlSb	aluminum antimonide
a.l.c. / ALC	automatic level control
ALS	advanced low-power Schottky
ALSTTL	advanced low-power Schottky transistor-transistor logic
ALU	arithmetic logic unit
AM	amplitude modulation
ANSI	American National Standards Institute
ARRL	American Radio Relay League
ASA	American Standards Association
ASCII	American Standard Code for Information Interchange
ASIC	application specific integrated circuit
ATE	automatic test equipment
ATU	aerial tuning unit
ATTD	avalanche transit time device
Aux.	auxiliary
a.v.c. / AVC	automatic volume control
AWG	American Wire Gauge

B

b	base
BABT	British Approvals Board for Telecommunications
BARITT	barrier injected transit time diode
bel	ratio of two amounts of power
BBC	British Broadcasting Corporation
BCD	binary coded decimal
BCS	British Computer Society
BFO	beat frequency oscillator
BHJT	bipolar heterojunction transistor
BICMOS	bipolar complementary metal oxide semiconductor
BJT	bipolar junction transistor
bps / BPS	bits per second
BS	British Standard
B&S	Brown and Sharpe gauge. Same as AWG
BSI	British Standards Institute
BTEC	Business and Technician Education Council
BX	the moving portion of a relay, bell or buzzer
B-Y	Blue minus luminace (Y) color TV signal

C

c	cathode
c	collector
C	capacitor
C	Coulomb
C	degree Celsius
CAD	computer aided design
CAM	computer aided machine
cap / CAP	capacitor
CATV	community antenna television
CB	Citizens' Band
CBIC	complementary bipolar integrated circuit
CBS	Columbia Broadcasting System
CCD	charge coupled device
CCIR	Consultative Committee for Internation Radio
CCITT	Consultative Committee for Telegraph and Telephone
CCTV	closed-circuit television
c.c.w.	counter-clockwise
cd	candela
Cd	cadmium
CD	compact disc (player or disc)
CDI	collector diffusion isolation
CdS	cadmium sulphide
CdTe	cadmium telluride
CERDIP	ceramic dual in-line package
chan.	channel
CHINT	charge injection transistor
CIX	Compulink Information Exchange
CLK	clock
cm	centimeter
CMOS	complementary metal oxide semiconductor
CMRR	common-mode rejection ratio
COMFET	conductivity modulated field effect transistor
c.p.s.	cyclsy per second
CPU	central processing unit
Cr	chromium
CRO	cathode ray oscilloscope
CrO2	chromium dioxide
CRT	cathode ray tube
CRTC	cathode ray tube controller
c.s.a.	cross sectional area
CSA	Canadian Standards Association
c.t.	center tap
C/T	current transformer
CTD	charge transfer device
CTR	current transfer ratio
CTS	clear to send
CW / cw / c-w	continuous wave
CW	counter-clockwise

D

d	drain
D	diode
D	deka
D/A	digital-to-analog converter
DAC	digital audio tape
dB	decibel
dBm	decibel (relative to 1 mW)
DBS	direct broadcast satellite
dBV	decibel (relative to 1 V)
d.c. / DC	direct current

DCE	data circuit-terminating equipment
dec.	decimal
deka	meaning 10
DEMUX	demultiplexer
DIL	dual in-line
DIN	German Industry Standard
DIP	dual in-line package
DMA	direct memory access
DMM	digital multimeter
DMOS	double diffused metal oxide semiconductor
DOS	disk operating system
DP	data processing
DPDT	double-pole, double-throw
DPST	double-pole, single-throw
DRAM	dynamic random access memory
DSB	double sideband
DSP	digital signal processing
DTE	data terminal equipment
DTI	Department of Trade and Industry
DTL	diode-transistor logic
DTMF	dual-tone multi-frequency
DUT	device under test
DVM	digital voltagemeter
DX	long distance

E

e / E	emitter
E	earth
EAROM	electrically alterable read-only memory
EBCD	extended binary coded decimal
EBU	European Broadcasting Union
e.c.c.	earth continuity conductor
ECMA	European Computer Manufacturers' Association
EEPROM	electrically erasable programmable read-only memory
EEROM	electrically erasable read-only memory
E²ROM	electrically erasable read-only memory
ECL	emitter coupled logic
EHF	extremely high frequency
EHT	extra high tension
EIA	Electronic Industries Association
EITB	Engineering Industry Training Board
e.i.r.p.	effective isotropically radiated power
ELED	edge-emitting light emitting diode
EM	electromagnetic
EMC	electromagnetic compatibility
e.m.f.	electromagnetic force
EMI	electromagnetic interference
EMP	electromagnetic electromagnetic pulse
EPROM	erasable-programmable read-only memory
EROM	erasable read-only memory
ERP	effective radiated power
ESD	electrostatic discharge

F

f	frequency
f / F	Farad

FAX	facsimile
fc	cut-off frequency
FCC	Federal Communications Commission
FDC	floppy disk controller
FDM	frequency division multiplex
Fe	ferrous
FeCr	ferri-chrome
FET	field effect transistor
FIFO	first-in first-out
FL	filter
FLL	frequency-locked loop
fm / FM	frequency modulation
FPGA	field programmable gate array
FPLA	field programmable logic array
FPROM	field programmable read-only memory
FRU	field replaceable unit
FSD	full-scale defelection
FSK	frequency-shift keying
FSM	frequency shift modulation
FSTV	fast-scan television
ft	transition frequency

G

g	gate
G	Giga (x 109)
GaAlAs	gallium aluminum arsenide
GaAs	galium arsenide
GaInAsP	gallium indium arsenide phosphide
GaP	gallium phosphide
GDP	graphic display processor
Ge	germanium
GHz	gigahertz
Giga	meaning one billion (109)
gilbert	unit of magnetomotive force
gm	mutual conductance of a tube
GMT	Greenwich mean time
GND	ground
GPIB	general purpose interface bus
GTO	gate turn off
G-Y	green minus the luminance (Y) signal in TV color

H

H	Henry
HDTV	high definition television
hex.	hexadecimal
HEMT	high electron mobility transistor
HF	high frequency
HMOS	high-speed metal oxide semiconductor
HPIB	Hewlett-Packard interface bus
h.t.	high tension
h.v.	high voltage
Hz	Hertz

I

I	current
IA5	International Alphabet No. 5
i.c. / IC	integrated circuit
ICE	in-circuit emulation
IEC	International Electrotechnical Commission
IEE	Institution of Electrical Engineers
IEEE	Institution of Electrical and Electronic Engineers

IEEIE	Institution of Electrical and Electronics Incorporated Engineers
IERE	Institution of Electronic and Radio Engineers
IF	intermediate frequency
IGFET	insulated gate field effect transistor
IGT	insulated gate transistor
IHF	Institute of High Fidelity
IKBS	intelligent knowledge-based systems
I^2L	integrated injection logic
IMD	intermodulation
IMPATT	impact ionization avalanche transit time diode
In	indium
In P	indium phosphide
In Sb	indium antimonide
inv.	inverter
I/O	input/output
I/P	input
I^2R	power (in watts) expressed in terms of current (I) and resistance (R)
IR	infrared
ISL	integrated Schottky logic
ISO	International Standards Organization
IT	information technology
ITeC	Information Technology Center
ITU	International Telecommunications Union

J

J	Joule
JAN	joint Army/Navy
JFET	junction field effect transistor
JUGFET	junction gate field effect transistor

K

k	cathode
k	kilo (x 103)
K	binary kilo (x1024)
°K	degree Kelvin
Kb	kilobyte
kc / KC	kilocycle
kg	kilogram
KHz	kilohertz
km	kilometer
k W	kilo ohm
kV	kilovolt
kW	kilowatt

L

L	inductor or coil
L	left (channel)
LAN	local area network
LASER	light amplification by stimulated emission of radiation
LCC	leadless chip carrier
LCD	liquid crystal display
LDR	light dependant resistor
LED	light emitting diode
LF	low frequency
l.h.	left-hand
LIFO	last-in first-out
lm	lumen
LOCMOS	locally oxidized complementary metal oxide semiconductor
LPE	liquid phase epitaxy

l.s.	loudspeaker
LS	low-power Schottky
LSA	limited space-charge accumulation
LSB	lower sideband
LSB	least-significant bit
LSD	least-significant digit
LSI	large scale integration
l.t.	low tension
l.v.	low voltage
LVDT	linear variable differential transducer
LVRT	linear variable reluctance transducer
l.w.	long wave
lx	lux

M

m	meter
m	milli (x 10^{-3})
M	mega (x 10^{6})
mA	milliamp
MAC	multiplexed analogue components
MAP	Manufacturing Automation Protocol
MBE	molecular beam epitaxy
m.c.	moving coil
MC	megacycle
MCW	modulated continuous wave
MESFET	metal semiconductor field effect transistor
µF	microfarad
MF	medium frequency
MFM	modified frequency modulation
mH	millihenry
mho	the opposite of resistance. measurement for conductance or admittance.
MHz	megahertz
mic.	microphone
MINIDIP	miniature dual-in-line package
mm	millimeter
MMIC	monolithic microwave integrated circuit
M Ω	megohm
MODEM	modulator/demodulator
MOS	metal oxide silicon
MOSFET	metal oxide silicon field effect transistor
MOST	metal oxide semiconductor transistor
MPU	microprocessor unit
MPX	multiplex
MSB	most-significant bit
MSD	most-significant-digit
MSI	medium scale integration
mt	main terminal
MTBF	mean time between failure
MTTF	mean time to failure
MTTR	mean time to repair
MUX	multiplexer
mV	millivolt
mW	milliwatt
m.w.	medium wave

N

n	nano (x 10^{-9})
n / N	negative
N	Newton
NAB	National Association of Broadcasters

NBC	National Broadcasting Company
NBS	National Bureau of Standards
n.c. / NC	not connected
nF	nanofarad
nH	nanohenry
Ni	nickel
NiCd	nickel cadmium
NMOS	N-channel metal oxide semiconductor
NOVRAM	non-volatile random access memory
n.p.n. / NPN	negative-positive-negative
NRZ	non-return to zero
n.t.c.	negative temperature coefficient
NTC	negative temperature coefficient
NTSC	National Television Systems Committee
nV	nanovolt
nW	nanowatt

O

Ω	Ohm
o.c.	open circuit
o.c.	open collector
OCR	optical character recognition
OD	outside diameter
OEM	original equipment manufacturer
OIC	optically coupled integrated circuit
O/P	output
opamp	operation amplifier
OSI	open systems interconnection

P

p	pico (x 10^{-12})
p / P	positive
P	power
P	plate of electron tube
PA	power amplifier
PAL	phase alternate line
PAL	programmable array logic
PAM	pulse amplitude modulation
pb.	playback
PC	personal computer
p.c.b. / PCB	printed circuit board
PCM	pulse code modulation
p.d.	potential difference
PEP	peak envelope power
pF	picofarad
PF	power factor
PIO	parallel input/output
PIN	positive intrinsic negative
PIPO	parallel input, parallel output
PISO	parallel input, serial output
pk	peak
pk-pk / P-P	peak-to-peak
PL	plug
PLA	programmable logic array
PLC	programmable logic controller
PLL	phase-locked loop
PM	pulse mudulation
PML	programmed macro logic
PMOS	P-channel metal oxide semiconductor
PMR	private mobile radio
p.n. / PN	positive-negative

p.n.p. / PNP	positive-negative-positive
PPI	programmable parallel interface
ppm	parts per million
PPM	pulse position modulation
PPM	peak program meter
pps	pulses per second
prf	pulse repetition frequency
PROM	programmable read-only memory
PSD	phase sensitive detector
PSE	packet switching exchange
PSK	phase-shift keying
PSRAM	pseudo-static random access memory
PSS	Packet Switch Stream
PSU	power supply unit
p.t.c. / PTC	positive temperature coefficient
PTFE	polytetrafluoroethylene
p.u. / P/U	pick-up
PUJT	programmable unijunction transistor
PUT	programmable unijunction transistor
PVC	polyvinylchloride
PWB	printed wiring board
PWM	pulse width modulation

Q

Q	quality factor
Q	transistor
QAM	quadrature amplitude modulation
QDBS	quasi-direct broadcasting by satellite
QIL	quad in-line

R

R	resistor
R	right (channel)
RACES	Radio Amateur Civil Emergency Service
rad	radian
RAM	random access memory
RB	ripple blanket
RC	resistance capacitance
rec.	record
RF	radio frequency
RFC	radio frequency choke
RFI	radio frequency interference
RGB	red, green, blue (primaries for light color spectrum)
r.h.	right-hand
RIAA	Record Industry Association of America
RISC	reduced instruction set code
RMM	read-mostly memory
r.m.s. / RMS	root mean square
ROM	read-only memory
RTC	real-time clock
RTL	resistor-transistor logic
RTS	request to send
RTTY	radio teletype
RV	variable resistor
RX	receiver
RZ	return to zero

S

s	source
s	second
S	Siemen
S	switch

SBC	single-board computer
s.c.	short circuit
Sch.	Schmitt
SCR	silicon controlled rectifier
SCS	silicon controlled switch
Se	selenium
SECAM	Sequential Couleur a Memoire
SHF	super high frequency
Si	silicon
SI	System International
SIL	single in-line
SIO	serial input / output
SIPO	serial input / parallel output
SISO	serial input / serial output
SK	socket
SLED	surface-emitting light emitting diode
SLSI	super large scale integration
SMATV	satellite master antenna television
SMC	surface mounted component
SMD	surface mounted device
SME	Society of Manufacturing Engineers
SMT	surface mounted technology
S/N	signal-to-noise
SNA	systems network architecture
SNA	systems network architecture
SNR	signal-to-noise ratio
SOP	standard operating procedure
SOS	silicon on sapphire
SPL	sound pressure level
SPDT	single-pole, double-throw
SPST	single-pole, single-throw
sr	steradian
SRAM	static random access memory
SSB	single sideband
SSI	small scale inegration
SSTV	slow-scan television
str.	strobe
s.w. / SW	short wave
SWG	stranded wire gauge
SWL	short wave listener
SWR	standing wave ratio
sync	synchronization

T

t	time
T	Tesla
T	transformer
TDM	time division multiplex
TED	transferred electron device
THD	total harmonic distortion
THz	terahertz
TID	transient intermodulation distortion
TOP	technical and office protocol
tot.	total
TP	test point
TR	transistor
TRAPATT	trapped plasma avalanche triggered diode
TRF	tuned radio frequency
tri.	tri-state
trig.	trigger
TTL	transistor-transistor logic
TTY	teletype
TV	television
TVI	television interference
TVRO	television receive-only
TX	transmit / transmitter

U

µ	micro
µA	microamp
UART	universal asynchronous receiver/transmitter
µF	microfarad
µH	microhenry
UHF	ultra high frequency
UJT	unijunction transistor
ULA	uncommitted logic array
ULSI	ultra large scale inegration
µm	micrometer
UMOS	U-channel metal oxide semiconductor
UPS	uniterruptible power supply
USART	universal synchronous/ asynchronous receiver/ transmitter
USB	upper sideband
µV	microvolt
UV	ultra-violet
µW	microwatt

V

V	Volt
VA	volt-ampere
valve	British equivalent of a tube
VAN	value added network
VC	variable capacitor
VCA	voltage controlled amplifier
VCO	voltage controlled oscillator
VCR	video cassette recorder
VDR	voltage dependent resistor
VDU	visual display unit
VFC	voltage-to-frequency converter
VFO	variable frequency oscillator
VHF	very high frequency
VHS	video home system
VLF	very low frequency
VLSI	very large scale integration
VMOS	V-channel metal oxide semiconductor
VOM	volt-ohm-meter
VR	variable resistor
VRAM	video random access memory
VSB	vestigial sideband
VSWR	voltage standing wave ratio
VTVM	vacuum-tube voltmeter
VTR	video tape recorder
VU	volume unit

W

WAN	wide area network
W	Watt
W	work
Wb	Weber

X

X / Xtal.	reactance
X / Xtal.	crystal
Xc	capacitive reactance
Xl	inductive reactance

Y

Y	crystal

Z

Z	impedance
ZD	zener diode

12/I - ERM
Electronics Repair Manual Index

Numerical Index

3.58 MHz peaking adjustment 6/TTV-VCS-Mag T985/T986 Pages 8-10
3-beam laser optical pickup system 7/CD-F-CDPD Page 3
80286 microprocessor 9/PC-VCS-286 Pages 1-3

A

Absorption markers 6/TTV-TE-TV/V Page 12
AC
- adaptor charger 5/Cam-TR-EA-F Page 1
- current gain 3/2-C-AC-T Page 3

Active Components 3/2-C-AC-A Page 1
Address bus 9/PC-AM Page 2
AFC 5/VCR-TR-VP-FPC Page 1
AFT
- circuit diagram 6/TTV-VCS-Mag T985/T986 Page 15
- control module 6/TTV-VCS-Mag T985/T986 Page 14
- waveform 6/TTV-VCS-Mag T985/T986 Page 9

AGC
- circuit 6/TTV-TR-T Page 1
- sync module circuits 6/TTV-VCS-Mag T985/T986 Page 12

Air conditioner
- basic parts 10/TR-A/C•R-A Page 3
- electrical problems 10/TR-A/C•R-EP Page 1
- general overview 10/TR-A/C•R-A Page 1
- heat pumps 10/TR-A/C•R-A Page 5
- mechanical problems 10/TR-A/C•R-MP Page 1
- refrigeration basics 10/TR-A/C•R-A Page 1
- schematic symbols 10/TR-A/C•R-EP Pages 2-5
- troubleshooting table 10/TR-A/C•R-MP Pages 2-4

Airway 2/3 Page 5
Aliasing 7/CD-F-CDPD Page 5
Alignment tools 5/VCR-TE Page 2
Alternating Current 3/2-PVC Page 2
AM
- antenna system 7/R-F-A Page 1
- bandwidth 7/R-F-T-AMT Page 1
- frequency conversion 7/R-F-T-AMT Page 2
- IF amplifier 7/R-F-T-AMT Page 2
- oscillator 7/R-F-T-AMT Page 2
- receiver tracking test 7/R-TR-R Page 3
- wave 7/R-F-T-AMT Page 1

Amplifier
- blown fuse 7/A-VCS-KA Page 1
- car amplifier 8/VCS-K-CA Page 1
- keyboard amplifier 7/A-VCS-KA Page 1

MIDI	7/A-A Pages 1-2
power supply	7/A-VCS-KA Page 4
preamplifiers	7/A-TR-P Page 1
solid state amplifiers	7/A-TR-SSA Page 1
tube amplifiers	7/A-TR-TA Page 1
Amplifier stages	6/TTV-TR-IFA Page 1
Amplitude modulation	7/R-F-M Page 1
Analog meter	4/3-DMM Page 2
AND Gates	3/2-C-AC-L Page 3
Antenna	
amplifier	7/R-F-A Page 2
cable	7/R-F-A Page 2
function	7/R-F-A Page 2
problems	7/R-TR-Ch Page 1
testing/alignment	7/R-F-A Page 1
APC	5/VCR-TR-VP-FPC Page 1
Applied squarewave waveforms	4/3-O Page 8
Astable pulse generator	3/2-C-AC-Ti Page 3
Audio	
heads	5/VCR-TR-AP-R Page 1
playback circuit	5/VCR-TR-AP-R Page 3
record circuit	5/VCR-TR-AP-R Page 3
section repair	6/TTV-TR-AS Page 5
select circuit	5/VCR-TR-AP-M Page 2
selections	5/VCR-TR-AP-M Page 1
track	5/VCR-TR-AP-R Page 1
Automatic	
fine tuning	6/TTV-VCS-Mag T985/T986 Page 7
frequency control	7/R-F-T-AMT Page 5
gain control	7/R-F-T-AMT Page 5
gain control tests	7/R-TR-R Page 2
pulse control circuit	5/VCR-TR-VP-FPC Page 2
test equipment	4/2 Page 12
Automobile	
battery ratings	8/TR-PS-BS Page 2
battery basic functions	8/TR-PS-BS Page 1
electrical systems diagnostic	8/TR-PS-BS Page 1
sealed battery	8/TR-PS-BS Page 1
Autoranging DMM	4/3-DMM Page 3

B

B+ adjustment	6/TTV-VCS-Mag T985/T986 Page 13
Back tension	5/VCR-TR-MA-TA Page 2
Backfocus adjustment	5/Cam-TR-EA-F Page 1
Bandwidth	3/2-C-AC-OpAmp Page 3
Bandwidth oscilloscope	4/3-O Page 3
Baseline curvature	6/TTV-TE-TV/V Page 7
Basic circuits	3/2-O Page 3
Batteries	3/PVC Page 3
Battery	
charging procedure	8/TR-PS-BS Page 5
charging time required	8/TR-PS-BS Page 4
lamp	8/TR-PS-CS Page 4
recharging procedures	8/TR-PS-BS Page 3
safety procedures	8/TR-PS-BS Page 4

Belt 5/VCR-VCS-FiFVH722 Page2
Bench lamp 4/1 Page 13
Beta 5/Cam-A Page 1
Bipolar transistors 3/2-C-AC-T Page 1
Bistables 3/2-C-AC-L Page 7
Black and white picture 6/TTV-TR-VS Page 4
Box-type telephone network 11/Tel-TR-SP Page 6
Brightness 6/TTV-A Page 1
Buffers 3/2-C-AC-L Page 2
Bulb check 8/TR-ECM Page 4
Bunn Pour-Omatic 10/TR-HE-CM Page 3
Burst frequency adjustment 5/Cam-TR-EA-C Page 4
Bus
- compatible devices 3/2-C-AC-L Page 9
- systems 9/PC-AM Page 2

C

Camcorder
- AGC 5/Cam-TR-EA-BC Page 1
- AIC level waveforms 5/Cam-TR-EA-BC Page 1
- alignment setup 5/Cam-TE Page 2
- auto white balance 5/Cam-F Page 2
- autofocus 5/Cam-F Page 1
- autofocus control circuit 5/Cam-TR-VP-CC Page 1
- automatic iris 5/Cam-F Page 2
- black level 5/Cam-TR-EA-BC Page 2
- block diagram 5/Cam-A Page 2
- case study 5/Cam-VCS-Sha-VL-L285U Pages 16-27
- cassette switch 5/Cam-TR-VP-SC Page 1
- dark shading 5/Cam-TR-EA-BC Page 2
- electronic viewfinder 5/Cam-F Page 2
- iris level adjustment 5/Cam-TR-EA-BC Page 1
- lens assembly 5/Cam-TR-VP-CC Page 1
- lens 5/Cam-F Page 2
- light box 5/Cam-TE Page 2
- light source 5/Cam-TE Page 1
- microphone/earphone 5/Cam-F Page 3
- monitor 5/Cam-TE Page 1
- picture creation 5/Cam-TR-VP-R Page 1
- power supplies 5/Cam-F Page 3
- power distribution 5/Cam-TR-VM Page 1
- record tab 5/Cam-TR-VP-SC Page 1
- reel sensors 5/Cam-TR-VP-SC Page 1
- standby/operate switch 5/Cam-TR-VM Page 2
- test/alignment charts 5/Cam-TE Page 2
- tripod 5/Cam-TE Page 1
- trouble sensors 5/Cam-TR-VP-R Page 1
- tubes/chips 5/Cam-A Page 2
- TV hookup 5/Cam-F Page 3
- voltage measurements 5/Cam-TR-VM Page 1

Capacitance checkers 4/2 Page 3
Capacitor
- characteristics 3/2-C-PC-C Page 3

color coding	3/2-C-PC-C Page 4
frequency	3/2-C-PC-C Page 2
replacement	3/2-C-PC-C Pages 1-2
Capstan	
digital speed	5/VCR-TR-CSP Page 5
Car radio	
disassembly	8/VCS-K-CA Page 2
distortion	8/VCS-K-CA Page 1
power supply	8/VCS-K-CA Page 5
subwoofer circuit	8/VCS-K-CA Page 12
CD	
care	7/CD-M Page 1
connections/cables	7/CD-TR-DD Page 1
connectors	7/CD-F-CDPD Page 2
design	6/TTV-VCS-Mag T985/T986 Page 1
differences	7/CD-F-CDPD Page 2
display panel	7/CD-F-CDPD Page 1
dust	7/CD-M Page 2
inside cleaning	7/CD-M Page 4
loaded improperly	7/CD-TR-DM Page 1
loading mechanisms	7/CD-TR-DD Page 1
motor control circuit	7/CD-TR-DM Page 3
outside cleaning	7/CD-M Page 4
scratches	7/CD-M Page 1
service equipment	7/CD-TR-DD Page 1
test disc	7/CD-TR-DD Page 1-2
Central LSI controller	5/VCR-TR-CSP Page 1
Ceramic capacitors	3/2-C-PC-C Page 4
Channel allocation	6/TTV-TR-T Page 1
Channel allocation frequency	6/TTV-TR-T Page 2
Charging systems	8/TR-PS-CS Page 1
Chopped-mode	4/3-O Page 6
Chroma	
carrier level	5/Cam-TR-EA-BC Page 2
circuit during record	5/VCR-TR-VP-C Page 1
demodulation	6/TTV-VCS-Mag T985/T986 Page 11
processing	5/Cam-TR-VP-SPC Page 2
set-up	5/Cam-TR-EA-C Page 1
Chromaticity	6/TTV-TR-VS Page 1
Chrominance	
section	6/TTV-TR-VS Page 5
signal	6/TTV-TR-VS Page 1
Circuit	
arrangements	3/2-C-AC-L Page 6
quick checking	8/TR-PS-CS Page 4
Circuit tester for automobile	8/TR-PS-CS Page 1
Circuit test	
aligning	8/TR-PS-CS Page 1
checklist	8/TR-PS-CS Page 1
signal tracing	8/TR-PS-CS Page 1
Circulation	2/3 Page 5
Cleaning	
fluid	7/CD-M Page 2
machines	7/CD-M Page 4
Clearing codes	8/TR-ECM Page 5
Closed-loop voltage gain	3/2-C-AC-OpAmp Page 1

CMOS 3/2-C-AC-L Page 2
Color picture signal 6/TTV-TR-VS Page 4
Color killer
adjustment 6/TTV-VCS-Mag T985/T986 Page 10
circuit 5/VCR-TR-VP-C Page 2
Color
picture tube tester 6/TTV-TE-TV/V Page 10
saturation 6/TTV-A Page 1
sync section 6/TTV-TR-VS Page 5
test jig 6/TTV-TE-TV/V Page 10
Color picture
tube components 6/TTV-TR-CPT Page 1
tube conditions 6/TTV-TR-CPT Page 1
Common-mode 3/2-C-AC-OpAmp Page 3
Compound darlington transistors 3/2-C-AC-T Page 4
Compressed air 7/CD-M Page 2
Computer architecture diagram 9/PC-AM Page 1
Computer, 286 9/PC-VCS-286 Pages 1-10
Computerized testing device 4/2 Page 13
Conductors/Insulators 3/2-O Page 2
Confirming white balance 5/Cam-TR-EA-BC Page 6
Contrast/background adjustments 11/C-TR Page 8
Contrast 6/TTV-A Page 1
Control
bus 9/PC-AM Page 2
inputs 3/2-C-AC-L Page 5
Controller 7/R-TR-DTR Page 3
Controls
overview 10/TR-C Page 1
testing 10/TR-C Page 1
Conversion factors 3/2-QUS Page 3
Coolant temperature sensor 15 8/TR-ECM-CL Page 2
Coolant temperature sensor 14 8/TR-ECM-CL Page 2
Copier
basics 11/C-A Page 2
drum 11/C-A Page 2
icons 11/C-TR Page 6
paper 11/C-A Page 3
pinch rollers 11/C-TR Page 3
problems 11/C-TR Page 5
start-up 11/C-TR Page 4
toner 11/C-A Page 3
Cordless phone
keypad 11/Tel-TR-CP-D Page 16
pilot tone 11/Tel-TR-CP-D Page 12
power circuits 11/Tel-TR-CP-D Page 4
Coulombmeter
feedback 3/3-LLM Page 41
shunt 3/3-LLM Page 40
CPU 9/PC-AM Page 1
Crimping tools 4/1 Page 6
Crosstalk canceller 5/VCR-TR-AP-R Page 4
CRP 2/3 Page 4
Cruise control
adjustments 8/TR-ECM-CC Page 3
adjustments 8/A Page 4

electro-motor 8/A Page 5-6
switch 8/A Page 1
throttle cable 8/TR-ECM-CC Page 4
Cylinder
lock detection 5/Cam-TR-VP-SC Page 2

D

D/A converters 7/CD-F-CDPD Page 6
D-Type bistable 3/2-C-AC-L Page 8
Data bus 9/PC-AM Page 2
DC current gain 3/2-C-AC-T Page 3
Defective camcorder batteries 5/Cam-TR-EA-F Page 3
Deflection coil 5/Cam-TR-VP-CC Page 5
Desoldering
braid 3/4-D Page 1
bulb 4/1 Page 15
wick 4/1 Page 15
Detail 6/TTV-A Page 2
Developers 11/C-A Page 4
Dew sensor 5/Cam-TR-VP-SC Page 2
Diagnostic mode 8/TR-ECM Page 5
Dial tracking problems 7/R-TR-Ch Page 2
Digital
keyboard 11/C-A Page 2
multimeter features 4/3-DMM Page 3
Digitally tuned
radio 7/R-TR-DTR Page 1
input keypad 7/R-TR-DTR Page 2
output 7/R-TR-DTR Page 2
power signals 7/R-TR-DTR Page 2
power supply 7/R-TR-DTR Page 2
synthesizer 7/R-TR-DTR Page 2
voltage 7/R-TR-DTR Page 2
Disc motor 7/CD-TR-DM Page 1
Discriminators 6/TTV-TR-AS Page 4
Disk
motor adjustment 7/CD-TR-DM Page 1
tray cleaning 7/CD-M Page 6
Display 7/R-TR-DTR Page 3
DMM
current tests 4/3-DMM Page 4
for automobile 8/TR-PS-CS Page 1
limitations 3/3-LLM Page 3
voltage tests 4/3-DMM Page 4
DOC circuit 5/VCR-TR-VP Page 1
Dolby 5/VCR-TR-AP-R Page 2
Drum head 5/VCR-A-VHS Page 2
Dual trace oscilloscope 5/VCR-TE Page 1
Dynamic focus
preset 5/Cam-TR-EA-F Page 3
release 5/Cam-TR-EA-F Page 1

E

ECM
- intermittent 8/TR-ECM Page 7
- replacement 8/TR-ECM Page 6

Electrical
- shock 2/3 Page 2

Electrometers
- analog 3/3-LLM Page 6
- digital 3/3-LLM Page 6

Electro-motor cruise control 8/TR-ECM-CC Page 5
Electrolyte levels 8/TR-PS-BS Page 2
Electronic
- control panels 10/TR-C Page 1
- control module 8/TR-ECM Page 1
- doorbell 10/TR-T Page 1
- spark timing circuit 42 8/TR-ECM-CL Page 5
- tuners 6/TTV-TR-T Page 5
- viewfinder circuits 5/Cam-TR-VP-CC Page 4

Encapsulation 3/2-C-AC-IC Page 3
End-cutter 4/1 Page 2
EPROM 9/PC-AM Page 2
Exclusive OR gates 3/2-C-AC-L Page 4

F

Fan-in/fan-out 3/2-C-AC-L Page 10
Farads 3/2-C-PC-C Page 1
Fax circuit board 11/F-A Page 3
Fax machine
- elements 11/F-A Page 1

Fax printer section 11/F-A Page 2
Fax transmission 11/F-A Page 1
FET transistors 3/2-C-AC-T Page 5
Field
- service mode 8/TR-ECM Page 5
- strength meter 7/R-TR-A Page 1

Filtering 7/CD-F-CDPD Page 6
Fire safety 2/3 Page 3
First aid 2/3 Page 4
FM
- antenna system 7/R-F-A Page 1
- demodulator test 7/R-TR-R Page 4
- detector 7/R-F-T-FMT Page 3
- filter and IF section 7/R-F-T-FMT Page 2
- mixer 7/R-F-T-FMT Page 2
- oscillator circuit 7/R-F-T-FMT Page 3
- receiver tuner section 7/R-F-T-FMT Page 1
- tuner functions 7/R-F-T-FMT Page 1
- tuner oscillator 7/R-F-T-FMT Page 2

Focus
- circuit 7/CD-TR-L Page 3
- preset adjustment 5/Cam-TR-EA-F Page 3

Frequency counter 5/VCR-TE Page 1
Frequency
counter block diagram 4/3-F Page 2
generator 5/VCR-TR-CSP Page 2
measurement 4/3-F Page 4
modulation 7/R-F-M Page 1
Fuzzy
logic 10/TR-C Page 4
vacuum cleaners 10/TR-C Page 4

G

Gamma 6/TTV-A Page 1
General Supplies 4/1 Page 16
Generator
noise 8/TR-PS-CS Page 1
testing 8/TR-PS-CS Page 2
trouble indication 8/TR-PS-CS Page 3
visual inspection 8/TR-PS-CS Page 3
wiring diagram 8/TR-PS-CS Page 3
GM terminal block 8/TR-ECM Page 3
Gray scale adjustment 6/TTV-VCS-Mag T985/T986 Page 10
Gripping screwdriver 4/1 Page 10
Grounded circuit 11/Tel-TR-TL Page 3
Guide

H

Hall gain balance 7/CD-TR-DM Page 1
Handset 11/Tel-TR-SP Page 1
Head cleaning 5/VCR-VCS-FiFVH722
Helping hand 4/1 Page 4
Hemostats 4/1 Page 4
Heterodyne
counter 4/3-F Page 8
Hi-Fi audio 5/VCR-TR-AP-R Page 2
High
frequency counting 4/3-F Page 7
frequency decoupling 3/2-C-AC-VR Page 5
voltage adjustment 6/TTV-VCS-Mag T985/T986 Page 13
Horizontal
deflection 6/TTV-TR-DC Page 3
module circuit 6/TTV-VCS-Mag T985/T986 Page 15
osc. adjustment 6/TTV-VCS-Mag T985/T986 Page 13
HQ Circuitry 5/Cam-F Page 3
Hue 6/TTV-A Page 2
Hydrometer 8/TR-PS-BS Page 1

I

I and O signals 6/TTV-TR-VS Page 6

I/O devices 9/PC-AM Page 2
IC
coding 3/2-C-AC-IC Page 3
installer 4/1 Page 11
puller 4/1 Page 12
removal 3/3-D Page 2
tools 4/1 Page 11
tuner circuit 6/TTV-TR-T Page 8
tuner block diagram 6/TTV-TR-T Page 6
IC301 7/CD-TR-DD Page 2
IF
amplifier check 7/R-TR-R Page 5
amplifier oscillation tests 7/R-TR-R Page 1
frequency 6/TTV-TR-T Page 3
IGFET transistors 3/2-C-AC-T Page 5
Input
offset voltage 3/2-C-AC-OpAmp Page 2
resistance 3/2-C-AC-OpAmp Page 2
Inspection mirror 4/1 Page 12
Integrated circuits 3/2-C-AC-IC Page 1
Intercarrier sound system diagram 6/TTV-TR-AS Page 2
Interchangeability checks 5/VCR-TR-MA-HA Page 1
Intermittent reception 6/TTV-TR-T Page 9
Internal modem 11/F-A Page 2
Interrupt connections to keyboard 10/TR-C Page 3
Inverters 3/2-C-AC-L Page 2
IR light 5/Cam-TR-VP-CC Page 1

J

J-K bistable 3/2-C-AC-L Page 8

K

Keyboard
cable 9/PC-TR-K Page 1
lubrication 9/PC-TR-K Page 2
power 9/PC-TR-K Page 1
removing keys 9/PC-TR-K Page 2
switching mechanisms 9/PC-TR-K Page 2
Knife 4/1 Page 5

L

Laser
diode 7/CD-TR-L Page 1
circuits 7/CD-TR-L Page 3
Laser lens
assembly 7/CD-TR-L Page 3
cleaning 7/CD-M Page 5

Laser Printer
- control circuits 9/PR-TR-LP Page 4
- diodes 9/PR-TR-LP Page 3
- drums 9/PR-TR-LP Page 5
- general operation 9/PR-TR-LP Page 1
- paper jams 9/PR-TR-LP Page 5
- smearing 9/PR-TR-LP Page 5
- test page 9/PR-TR-LP Page 6
- toner 9/PR-TR-LP Page 5

Laserbeam 7/CD-F-CDPD Page 3
Leading/lagging voltages 4/3-O Page 16
Line
- probe 11/Tel-TE Page 1

Lissajous figures 4/3-0 Page 9
Load testing 8/TR-PS-BS Page 2
Local oscillator checking 7/R-TR-R Page 1
Logic
- ICs 3/2-C-AC-L Page 1
- levels 3/2-C-AC-L Page 8

Logical functions 3/2-C-AC-L Page 2
Loop filter 7/R-TR-DTR Page 4
Low/high
- channels with problems 6/TTV-TR-T Page 9
- chroma levels 6/TTV-TE-TV/V Page 5

Low frequency
- measurement 4/3-F Page 7

Low Level Measurements 3/3-LLM Page 1
Luminance
- processing 5/Cam-TR-VP-SPC Page 1
- signal 6/TTV-TR-VS Page 1

M

Magnavox TS checklist 6/TTV-VCS-Mag T985/T986 Page 2-5
Magnavox disassembly 6/TTV-VCS-Mag T985/T986 Page 1
Magnetic flux 5/VCR-A-VHS Page 1
Magnifying glass 4/1 Page 13
Map sensor code 34 8/TR-ECM-CL Page 4
Maximum output voltage swing 3/2-C-AC-OpAmp Page 3
MC33034
- brushless motor control 10/TR-ECM Page 1

MC33035
- motor control IC 10/TR-ECM Page 2

MC34012
- ringer replacement 11/Tel-TR-SP Page 4

Measurements
- basic charge 3/3-LLM Page 38
- low current 3/3-LLM Page 24
- low-level 3/3-LLM Page 1
- terms 3/3-LLM Page 4

Mechanical electronic tuners 6/TTV-TR-T Page 4
Melody doorbell 10/TR-T Page 3
Miniature camcorder 5/Cam-A Page 2
Minimum voltage list 8/TR-PS-BS Page 3

Mirror 4/1 Page 13
Miscellaneous problems 7/R-TR-Ch Page 3
Misfed paper 11/C-TR Page 1
Mixer stage circuit 7/R-F-T-FMT Page 4
Mode sensor switch 5/Cam-TR-VP-SC Page 1
Modulation 6/TTV-TR-VS Page 3
Modulation problems 7/R-TR-Ch Page 2
Modulator removal 5/VCR-VCS-FiFVH722 Page 7
Monochrome clusters 6/TTV-TE-TV/V Page 5
Monostables 3/2-C-AC-L Page 4
Monstable pulse generator 3/2-C-AC-Ti Page 3
Mouth-to-mouth 2/3 Page 7
Multidrawer cabinets 4/1 Page 17
Multiple DMM ranges 4/3-DMM Page 4
Multiwire cutter 4/1 Page 2

N

NAND Gate 3/2-C-AC-L Page 4
Needlenose pliers 4/1 Page 3
Networks 11/Tel-TR-SP Page 3
Noise
- margins 3/2-C-AC-L Page 8
- problems 7/R-TR-Ch Page 1

NOR Gate 3/2-C-AC-L Page 4
NPN transistors 3/2-C-AC-T Page 2
NTSC color bar 5/VCR-TE Page 1
Nut drivers 4/1 Page 8

O

Oblique cutter 4/1 Page 2
Offset-null facility 3/2-C-AC-Op Amp Page 4
Ohm's
- law formula 3/2-O Page 1
- test 4/3-DMM Page 5

Open circuit 11/Tel-TR-TL Page 2
Open circuit voltage test 8/TR-PS-BS Page 3
Open-loop voltage gain 3/2-C-AC-Op Amp Page 1
Operational amplifiers 3/2-C-AC-Op Amp Page 1
OR Gates 3/2-C-AC-L Page 3
Oscillator problems 8/TR-PS-CS Page 1
Oscilloscope
- accuracy 4/3-O Page 7
- alternate mode 4/3-O Page 5
- probe 4/3-O Page 7

Output
- resistance 3/2-C-AC-Op Amp Page 2
- waveform characteristics 3/2-C-AC-Ti Page 4

Overdischarge detection circuit 5/Cam-TR-EA-F Page 5
Oxygen sensor circuit 8/TR-ECM-CL Page 1

P

Paper	
input	11/C-A Page 2
path	11/C-TR Page 2
Passive components	3/2-C-PC-A Page 1
Pattern generators	6/TTV-TE-TV/V Page 9
PC	
based fax	11/F-A Page 2
board cleaning	7/CD-M Page 6
monitor and cards	9/PC-TR-MC Page 1
Period measurement waveform	4/3-F Page 5
Phase	
inversion on VHS machine	5/VCR-TR-VP-PI Page 1
FM stereo demodulation	7/R-TR-R Page 7
lock-loop detector	6/TTV-TR-AS Page 5
Phone	
automatic test equipment	11/Tel-TR-TL Page 2
circuits crossed	11/Tel-TR-TL Page 5
cords	11/Tel-TR-SP Page 1
corrosion	11/Tel-TR-TL Page 2
cracking/static	11/Tel-TR-TL Page 1
disconnects	11/Tel-TR-TL Page 3
dust/debris	11/Tel-TR-TL Page 6
intermittent problem	11/Tel-TR-TL Page 1
line testing	11/Tel-TR-TL Page 1
line noise	11/Tel-TR-TL Page 4
wire damage	11/Tel-TR-TL Page 2
Pick-up motor offset	7/CD-TR-L Page 2
Picture phase	6/TTV-TR-VS Page 3
Plastic film capacitors	3/2-C-PC-C Page 5
Pliers	4/1 Page 3
PLL tuning circuit	6/TTV-TR-T Page 7
PNP transistors	3/2-C-AC-T Page 2
Power	3/2-PVC Page 1
supply problems	7/R-TR-Ch Page 1
Power supply	
measurements	9/PC-TR-PS Page 1
access	9/PR-TR-PS Page 1
Preforming solder leads	3/4 Page 2
Prescaler	7/R-TR-DTR Page 3
Prescaler circuit	4/3-F Page 6
Probes	
active	4/3-TEP Page 11
bias/offset	4/3-TEP Page 10
low-Z	4/3-TEP Page 10
parameters	4/3-TEP Page 27
specifications	4/3-TEP Page 23
tips	4/3-TEP Page 32
types	4/3-TEP Page 20
Processor	
control diagram	10/TR-C Page 2
PTT/MOX transmitter codes	8/R-TR-T Page 2

Pulse generator 5/VCR-TR-CSP Page 3
Purity 6/TTV-VCS-Mag T985/T986 Page 10

Q

Quantities 3/2-QUS Page 1

R

R and B signal
- gain preset 5/Cam-TR-EA-C Page 2
- separation preset 5/Cam-TR-EA-C Page 2
- shading preset 5/Cam-TR-EA-C Page 2
- shading release 5/Cam-TR-EA-C Page 1

R-S bistable 3/2-C-AC-L Page 7
Radio
- AM Tuners 7/R-F-T-AMT
- antenna 7/R-F-A
- circuit Tests 7/R-TR-CT
- digitally Tuned Radios 7/R-TR-DTR
- FM Tuners 7/R-F-T-FMT
- modulation 7/R-F-M
- receivers 7/R-TR-R
- transceivers 7/R-TR-T
- troubleshooting and repair 7/R-TR

RAM 9/PC-AM Page 2
Ratio
- detectors 6/TTV-TR-AS Page 4
- measurement waveform 4/3-F Page 5

Receiver
- case study 7/R-VCS-Tech ST-S8 Pages 1-12
- IF amplifier oscillation tests 7/R-TR-R Page 1
- oscillator checking 7/R-TR-R Page 1

Reel
- table height 5/VCR-TR-MA-HA Page 1

Reflectometers 7/R-TR-A Page 1
Refrigerator
- basic parts 10/TR-A/C•R-A Page 3
- electrical problems 10/TR-A/C•R-EP Page 1
- mechanical problems 10/TR-A/C•R-MP Page 1
- refrigeration basics 10/TR-A/C•R-A Page 2

Rejection ratio 3/2-C-AC-Op Amp Page 3
Remote control cleaning 7/CD-M Page 7
Resin core
- solder 4/1 Page 15

Resistance
- checking circuit 4/3-DMM Page 5
- substitution box 4/2 Page 6
- substitution circuit 4/2 Page 7

Resistor
- accuracy 3/2-C-PC-R Page 1
- color codes 3/2-C-PC-R Page 3

functions	3/2-C-PC-R Page 1
noise	3/2-C-PC-R Page 1
power rating	3/2-C-PC-R Page 1
replacement	3/2-C-PC-R Page 2
stability	3/2-C-PC-R Page 1
temperature	3/2-C-PC-R Page 1
values	3/2-C-PC-R Page 1
RF	
amplifier of mixer stage	6/TTV-TR-T Page 9
amplifier	7/R-F-T-FMT Page 2
selection	6/TTV-TR-T Page 1
systems troubleshooting	7/R-TR-A Page 1
Ribbon cable strippers	4/1 Page 6
Ringers/Buzzers/Bells	11/Tel-TR-SP Page 3
Ringing	6/TTV-TR-IFA Page 3
Rise time	4/3-O Page 12
ROM	9/PC-AM Page 1
Rotary	
dial	11/Tel-TR-SP Page 2

S

Safety warnings	2/3 Page 1
Sample/hold offset adjustment	7/CD-TR-DM Page 1
Sampling and oversampling	7/CD-F-CDPD Page 5
Scale of Integration	3/2-C-AC-IC Page 2
Scan tool	8/TR-ECM Page 1
Scanning process	11/F-A Page 2
Schmitt trigger	4/3-F Page 3
Screwdrivers	4/1 Page 8
Second detector	7/R-F-T-AMT Page 3
Selectivity	6/TTV-TR-IFA Page 1
Servo	
problems	5/VCR-TR-CSP Page 2
terminals/box	8/A Pages 2-3
timing chart	5/VCR-TR-CSP Page 2
Sharp VL-L285U	
adjustments	5/Cam-VCS-Sha-VL-L285U Pages 16-27
disassembly	5/Cam-VCS-Sha-VL-L285U Pages 4-8
overview	5/Cam-VCS-Sha-VL-L285U Pages 1-2
Shock victim	2/3 Page 4
Shunt resistance	3/3-LLM Page 16
Side cutter	4/1 Page 2
Signal	
injection	8/TR-PS-CS Page 3
problems	7/R-TR-Ch Page 2
processing circuits	7/CD-TR-SP/AC Pages 1-2
tracer	4/2 Page 6
tracing in a simple receiver	8/TR-PS-CS Page 2
Simple electronic phone	11/Tel-TR-SP Page 5
Sine wave	4/3-O Page 15
Sine wave parameters	3/2-PVC Page 4
Slew rate	3/2-C-AC-Op Amp Page 3
Small gripping tools	4/1 Page 4
Solder	

joint 3/4 Pages 1,4
thickness 3/4 Page 1
types 3/4 Page 1
Soldering
checklist 3/4 Page 4
pencil 4/1 Page 13
tips 4/1 Page 14
Soldersucker 3/4-D Page 2
Solid state 4/1 Page 17
Sound module 6/TTV-VCS-Mag T985/T986 Page 8
Sound IF alignment 6/TTV-VCS-Mag T985/T986 Page 7
Source-measure units 3/3-LLM Page 9
Special security head 4/1 Page 9
Squelch 7/R-F-T-AMT Page 5
circuit 7/R-F-T-AMT Page 6
Standard
linear audio 5/VCR-TR-AP-R Page 1
resistors 4/1 Page 17
Static convergence 6/TTV-VCS-Mag T985/T986 Page 10
Stereo amplifier power check 7/R-TR-R Page 6
Stethoscope 4/1 Page 13
Stripe filter characteristics 5/Cam-TR-VP-R Page 2
Substitution box 4/2 Page 3
Supply voltages 3/2-C-AC-L Page 10
Surgical clamps 4/1 Page 4
SVHS 5/Cam-A Page 1
SVHS-C 5/Cam-A Page 1
Sweep
generator 6/TTV-TE-TV/V Page 11
Symbols 3/2-QUS Pages 4-10
System check 8/TR-ECM Page 4

T

Table guidepost adjustment 5/VCR-TR-MA-HA Page 1
Tantalum capacitors 3/2-C-PC-C Page 5
Tape counter
capacitance 5/Cam-TR-VP-TCC Page 2
controls 5/Cam-TR-VP-TCC Page 2
memory 5/Cam-TR-VP-TCC Page 2
display 5/Cam-TR-VP-TCC Page 1
Tape
jam 5/VCR-VCS-FiFVH722 Page 1
transport 5/VCR-TR-MA-TT Page 1
TDA1085A motor speed controller 10/TR-ECM Page 3
Technics ST-S8
adjustments 7/R-VCS-Tech ST-S8 Pages 1-7
ICs 7/R-VCS-Tech ST-S8 Pages 8-12
Telephone
cordless phones 11/Tel-TR-CP Page 1
standard phones 11/Tel-TR-SP Page 1
telephone line 11/Tel-TR-TL Page 1
Tension
adjustments 5/VCR-TR-MA-TA Page 1

control adjustment 11/C-TR Page 3
Test
charts 6/TTV-TE-TV/V Page 13
light for automobile 8/TR-PS-CS Page 1
phone 11/Tel-TE Page 1
socket configuration 4/2 Page 10
tapes 5/VCR-TE Page 1
Test equipment
audio codes 9/PC-TE Page 4
automatic 9/PC-TE Page 2
breakout box 9/PC-TE Page 1
CPU simulator 9/PC-TE Page 3
diagnostic software 9/PC-TE Page 4
disk drive exerciser 9/PC-TE Page 4
IC tester 9/PC-TE Page 3
logic clip 9/PC-TE Page 2
logic comparator 9/PC-TE Page 2
signature analyzer 9/PC-TE Page 3
Thermostats
bimetallic strip 10/TR-Th Page 1
heat coil 10/TR-Th Page 2
heat sensing 10/TR-Th Page 2
testing 10/TR-Th Page 2
thermistor/varastor 10/TR-Th Page 2
thermocouple device 10/TR-Th Page 2
Throttle position sensor circuit 21 8/TR-ECM-CL Page 2
Throttle position sensor circuit 22 8/TR-ECM-CL Page 3
Time interval measurement 4/3-F Page 4
Time measurement 4/3-O Page 10
Timers 3/2-C-AC-Ti Page 1
Tone generator 11/Tel-TE Page 1
Tools for repair 4/1 Page 1
Toroidal yoke windings 6/TTV-TR-CPT Page 1
Torx head 4/1 Page 9
Totalizing measurment 4/3-F Page 6
Touch tone dial 11/Tel-TR-SP Page 2
Tracking servo offset 7/CD-TR-L Page 3
Tracking preset 5/Cam-TR-EA-BC Page 4
Transceiver
alignment 8/R-TR-T Page 2
switching control problems 8/TR-PS-CS Page 1
Transformer
characteristics 3/2-C-PC-T Page 1
construction 3/2-C-PC-T Page 3
formulas 3/2-C-PC-T Page 3
functions 3/2-C-PC-T Page 1
replacement 3/2-C-PC-T Page 4
symbols 3/2-C-PC-T Page 2
testing 10/TR-T Page 1
Transistor
checkers 4/2 Page 8
coding 3/2-C-AC-T Page 5
hFE measuring 4/3-DMM Page 7
Transmitter
frequency counters 7/R-TR-A Page 1
power supplies 7/R-TR-A Page 2
Triac casings 3/2-C-AC-Tr Page 2

Triacs 3/2-C-AC-Tr Page 1
Trigger input 4/3-O Page 5
Troubleshooting
- approach 3/3 Page 1
- block diagrams 3/3 Pages 4-5
- circuit diagram 3/3 Pages 6-13
- component identification 3/3 Page 15
- flow chart 3/3 Page 2
- substitution 3/3 Pages 16-19

Truth tables 3/2-C-AC-L Page 2
TSW signal 7/CD-TR-DM Page 2
TTL devices 3/2-C-AC-L Page 9
Tube testers 4/2 Page 11
Tuner
- case study 7/T-VCS-ZXP Pages 1-12
- diagnosis and repair 6/TTV-TR-T Page 7

Turret tuners 6/TTV-TR-T Page 4
TV
- alignment 6/TTV-VCS-Mag T985/T986 Page 5
- audio 6/TTV-TR-AS Pages 1-2
- color problems 6/TTV-TR-AS Page 1
- crosstalk 6/TTV-TR-PS Page 1
- frequency spectrum 6/TTV-TE-TV/V Page 4
- humming 6/TTV-TR-PS Page 1
- picture problems 6/TTV-TE-TV/V Page 1
- poor color 6/TTV-TR-T Page 10
- receiver block diagram 6/TTV-TE-TV/V Page 6
- sound missing 6/TTV-TR-IFA Page 2
- standards 6/TTV-TE-TV/V Page 3
- testing procedures 6/TTV-TE-TV/V Page 3
- troubleshooting flow chart 6/TTV-TE-TV/V Page 2
- waveform monitors 6/TTV-TE-TV/V Page 1
- weak sound 6/TTV-TR-PS Page 1

Typical IF stage block diagram 6/TTV-TR-IFA Page 2

U

UHF tuner 6/TTV-VCS-Mag T985/T986 Page 14
UM3482A doorbell music chip 10/TR-T Page 4
Units 3/2-QUS Page 2

V

Vacuum
- cruise control 8/TR-ECM-CC Page 1
- supply test 8/TR-ECM-CC Page 2

Variable
- capacitors 3/2-C-PC-C Page 6
- resistors 3/2-C-PC-R Page 4

VCR
- cleaning procedure 5/VCR-A-VHS Page 2
- cover screw positions 5/VCR-A-VHS Page 3
- external cleaning 5/VCR-A-VHS Page 1
- internal cleaning 5/VCR-A-VHS Page 1

lubrication 5/VCR-A-VHS Page 3
luminance circuit 5/VCR-TR-VP-FPC Page 1
recording patterns 5/VCR-TR-VP-R Page 1
repair procedures 5/VCR-VCS-FiFVH722 Page 1
transistor replacement 5/VCR-VCS-FiFVH722 Page 9
Vectorscope 6/TTV-TE-TV/V Page 3
Vectorscope waveform monitor 5/VCR-TE Page 1
Vehicle speed sensor circuit 24 8/TR-ECM-CL Page 3
Ventilation 3/1 Page 2
Vertical deflection circuits 6/TTV-TR-DC Page 1
Vertical/horizontal centering 6/TTV-VCS-Mag T985/T986 Page 13
VHF tuner 6/TTV-VCS-Mag T985/T986 Page 14
VHS-C 5/Cam-A Page 1
Vibration 7/CD-F-CDPD Page 7
Video
analyzer 5/VCR-TE Page 1
IF alignment 6/TTV-VCS-Mag T985/T986 Page 5
monitor 5/VCR-TE Page 1
problems 6/TTV-TR-DC Page 2
Videomatic
module 6/TTV-VCS-Mag T985/T986 Page 12
range adjustment 6/TTV-VCS-Mag T985/T986 Page 11
Videotape 5/VCR-A-VHS Page 2
Voltage regulator
casings 3/2-C-AC-VR Page 5
circuits 3/2-C-AC-VR Page 3
Voltage
divider 4/2 Page 3
regulators 3/2-C-AC-Tr Page 1
VOX control 8/TR-PS-CS Page 1

W

Wafer tuner 6/TTV-TR-T Page 3
Watt meter 7/R-TR-A Page 1
Waveform
analysis 4/3-O Page 14
jitter measurement 4/3-O Page 11
phase shift 4/3-0 Page 12
Waveforms 3/2-PVC Page 3
White balance circuit 5/Cam-TR-VP-CC Page 3
Wire
cutters 4/1 Page 1
stripping tools 4/1 Page 5
Wiring
circuit amperage 10/A-W Page 1
color coding 10/A-W Page 5
electrical load 10/A-W Page 1
low voltage 10/A-W Page 6
NEC 10/A-W Page 1
rating 10/A-W Page 1
receptacles 10/A-W Page 2
sizing 10/A-W Page 4
stranding 10/A-W Page 5
Work station supply 4/2 Page 2
Workplace power supply 4/2 Page 2

Y

Yoke 6/TTV-TR-CPT Page 2

Z

Zenith XP Tuner
- alignment 7/T-VCS-ZXP Pages 5-11
- audio/power supply schematic 7/T-VCS-ZXP Page 3
- general troubleshooting 7/T-VCS-ZXP Page 1
- RF/IF/MPX schematic 7/T-VCS-ZXP Page 4

Zoom motor control circuit 5/Cam-TR-VP-CC Page 2

12/I - IC - A
Audio Devices

Device	Part Number	Manufacturer	Description	Notes
110	M110	SGS-Thompson	Synthesizer	Monophonic
112	M112	SGS-Thompson	Synthesizer	Polyphonic
200	TBB200	Siemens	Freq. synthesizer	Phase locked loop
206	TBB206	Siemens	Frequency synthesizer	PLL with 3 line bus
210	XR210	Exar	FSK Modulator/Demod.	FM circuits
215	XR215	Exar	Phase locked loop	FM circuits
262	CS262	Cherry Semi.	Speaker phone	
272	CS272	Cherry Semi.	Speaker phone	
326	IR3R26	Sharp	AM receiver	
381	IR3N81A	Sharp	Speaker phone	
383	IR3N83	Sharp	Speaker phone	Speech network
384	IR3N84	Sharp	Speaker phone	Preset volume
406	MX406	MX-COM	Phase locked loop	FM circuits
415	ZN415E	Plessey	AM receiver	
416	ZN416	Plessey	AM receiver	
440	TCA440	Siemens	AM receiver	
469	TBB469	Siemens	FM receiver	
564	SE564 NE564	Signetics Signetics	Phase locked loop Phase locked loop	FM circuits FM circuits
567	SE567 LM567C XR567C XR567AC NE567 LM567C LM567	Signetics Samsung Exar Exar Signetics National National	Tone decoder Tone decoder Tone decoder Tone decoder Tone decoder Tone decoder Tone decoder	Phase locked loop Phase locked loop Phase locked loop Phase locked loop Phase locked loop Phase locked loop Phase locked loop
568	NE568 LMC568	Signetics National	Phase locked loop Phase locked loop	FM circuits Demodulates FM/FSK
600	SAB0600	Siemens	Music chimes	

Device	Part Number	Manufacturer	Description	Notes
601	SAB0601	Siemens	Music chimes	
602	SAB0602	Siemens	Music chimes	
604	NE604A	Signetics	FM radio	Quadrature detector, signal strength
605	NE605	Signetics	AM/FM receiver	Quadrature detector, signal strength, clock
615	NE615	Signetics	AM/FM receiver	
623	SL623C	Plessey	SSB detector	AM single sideband
652	SL652	Plessey	Phase locked loop	FM circuits
758	µA758	Signetics	FM stereo decoder	
1057	SAA1057	Signetics	AM/FM tuner	Tuning synthesizer
1062	TDA1062S	AEG Corp	FM tuner	
1083	TDA1803	AEG Corp	AM/FM receiver	
1099	SAA1099	Signetics	Sound generator	Stereo sound effects
1112	LM1112A LM1112B LM1112C	National National National	Dolby processor Dolby processor Dolby processor	B-type noise reduction B-type noise reduction B-type noise reduction
1137	LA1137	Sanyo	AM radio	AM IF circuit
1212	F1212	National	Modem	Bell 103/212A
1220	TDA1220L TDA1220A	SGS-Thompson SGS-Thompson	AM/FM receiver AM/FM receiver	
1240	LS1240 LA1240	SGS-Thompson Sanyo	Telephone tone ringer AM tuner	Same as MC34012
1245	LA1245	Sanyo	AM tuner	
1262	CH1262	Cermetek	Modem	Bell 103/113
1267	CH1267	Cermetek	Modem	Bell 103/113
1276	µPD1276G	NEC	FM radio	FM front end
1280	CH1280	Cermetek	Modem	Bell 103/113
1287	µPD1287	NEC	FM radio	Stereo demodulator
1310	LM1310	National	FM stereo decoder	
1322	µPD1322	NEC	AM receiver	
1330	TEA1330	SGS-Thompson	FM stereo decoder	
1344	µPD1344	NEC	AM receiver	

Device	Part Number	Manufacturer	Description	Notes
1469	TBB1469	Siemens	FM receiver	
1496	SG1496 MC1496 LM1496 LM1496 SL1496	Silicon Gen. Motorola Signetics National Plessey	Modulator/demodulator Modulator/demodulator Modulator/demodulator Modulator/demodulator Modulator/demodulator	FM, balanced mod/demod (See MC1596) FM, balanced mod/demod (See MC1596) FM, balanced mod/demod (See MC1596) FM, balanced mod/demod (See MC1596) FM, balanced mod/demod (See MC1596)
1524	TDA1524A MC1524A	Motorola Motorola	Stereo tone control AM/FM radio	Balance, volume, trebel, bass Stereo tone control
1572	TDA1572	Signetics	AM receiver	IF output
1574	TUA1574	Siemens	AM/FM tuner	
1578	TDA1578A	Signetics	FM stereo decoder	
1596	MC1596	Motorola	Modulator/demodulator	Wide temperature version of MC1496
1658	SP1658	Plessey	VCO	Voice controlled oscillator
1760	CH1760	Cermetek	Modem	Bell 212A
1763	CH1763	Cermetek	Modem	Bell 212A
1765	CH1765	Cermetek	Modem	Bell 212A
1770	CH1770	Cermetek	Modem	Bell 212A
1800	LM1800	National	FM stereo decoder	
1866	LM1866	National	AM/FM receiver	
1870	LM1870	National	FM stereo decoder	
1891	CH1891	Cermetek	Modem	MNP error level 4
1892	CH1892	Cermetek	Modem	MNP error level 5 (data compression)
1992	LMC1992	National	Stereo FM radio	Digital tone/volume, 4 channel input
2009	2009Z	NCM	Melody circuit	Used in clocks
2112	SDA2112-2	Siemens	Phase locked loop	FM circuits
2121	SDA2121 XR2121	Siemens Exar	AM/FM tuner Modem	Phase lock loop Modulator, Bell 212A
2122	XR2122	Exar	Modem	Demodulator, Bell 212A
2130	XR2130	Exar	Modem	Bell 212A, CCITT V.22
2204	ULN2204A	Allegro Micro	AM/FM receiver	
2211	XR2211C XR2211C	Raytheon Exar	Tone decoder Tone decoder	Phase locked loop Phase locked loop
2213	XR2213C	Exar	Tone decoder	Phase locked loop

Device	Part Number	Manufacturer	Description	Notes
2241	ULN2241C	Allegro Micro	AM/FM receiver	
2243	KA2243	Samsung	AM/FM radio	IF system
2244	KA2244	Samsung	FM radio	Stereo
2245	KA2245	Samsung	FM radio	Stereo
2249	KA2249	Samsung	FM radio	FM front end, portable radios
2418	KA2418	Samsung	Telephone tone ringer	Same as MC34012
2469	TBB2469	Siemens	FM receiver	
2559	UMC2559	UNC	Tone dialer	
2770	LA2770	Sanyo	Dolby processor	Surround sound
2831	MC2831A MC2831	Motorola Motorola	FM transmitter FM/FSK transmitter	FM/FSK 50 MHz, low battery check, tone osc.
2833	MC2833 MC2833 µPD2833	Motorola Motorola NEC	FM transmitter FM/FSK transmitte Phase locked loop	FM/FSK r150 MHz, 2 freq. multiplier/amps
2834	µPD2834	NEC	Phase locked loop	
3022	YM3022	Yamaha	4800 modem	Analog-digital interface
3088	CA3088	Harris	AM receiver	
3105	TCM3105	TI	Modem	Bell 202/CCITT V.23
3195	CA3169	Harris	FM stereo decoder	
3200	NJU3200	NJR	Freq. synthesizer	Phase locked loop, AM/FM radio
3240	LS3240	SGS-Thompson	Telephone tone ringer	Same as MC34017
3356	MC3356	Motorola	RF receiver	Wideband data, FM/FSK, VHF. 500Kb rate
3357	MC3357	Motorola	FM IF	Narrowband
3359	MC3359	Motorola	FM IF	Low power narrowband
3361	MC3361 MC3361B LA3361	Signetics Motorola Sanyo	AM/FM receiver FM IF FM stereo decoder	Low voltage narrowband
3362	MC3362	Motorola	VHF/FM receiver	Dual conversion, mute I/O
3363	MC3363	Motorola	FM receiver	Dual conversion
3365	LA3365 MC3365	Sanyo Motorola	FM stereo decoder RF receiver	Narrowband dual conversion, FM/FSK, VHF
3367	MC3367	Motorola	FM receiver	Low voltage narrowband

Device	Part Number	Manufacturer	Description	Notes
3370	LA3370	Sanyo	FM stereo decoder	
3371	MC3371	Motorola	FM IF	Narrowband
3375	LA3375	Sanyo	FM stereo decoder	
3419	MC3419-1L	Motorola	Telephone interface	Subscriber loop interface
3459	NCM3459Z	NCM	Alarm clock radio	
3530	MT3530	Mitel	Modem	Bell 103/113
3615	GL3615	Goldstar	Play/record circuit	VCR audio circuit
3839	ULN3839A	Allegro Micro.	AM receiver	
3910	PBM3410	Ericsson	Speaker phone	
3911	PBM3411	Ericsson	Speaker phone	
4010	TDA4010	Siemens	AM receiver	AM stereo
4046	CD4046 CD4046BC F4046 CD4046B CD4046BN CD4046BE HCF4046 HCC4046	National National National Harris National Harris SGS-Thompson SGS-Thompson	Phase locked loop Phase locked loop Phase locked loop Phase locked loop Phase locked loop Phase locked loop Phase locked loop Phase locked loop	CMOS, FM circuits (replaces MC14046) CMOS, FM circuits CMOS, FM circuits (replaces MC14046) CMOS, FM circuits (replaces MC14046) CMOS, FM circuits CMOS, FM circuits CMOS, FM circuits (replaces MC14046) CMOS, FM circuits (replaces MC14046)
4105	MB4105	Fujitsu	FM radio	Stereo multiplex demodulator
4500	TCA4500A LM4500A	Motorola National	FM stereo decoder FM stereo decoder	
4511	TCA4511-1	Siemens	Stereo decoder	Phase locked loop
5206	KS5206	Samsung	Alarm clock	
5207	KS5207	Samsung	Alarm clock	
5310	KS5310A KS5310C	Samsung Samsung	Melody circuit Melody circuit	Used in clocks Used in clocks
5313	KS5313	Samsung	Melody circuit	Used in clocks
5314	KS5314	Samsung	Melody circuit	Used in clocks
5340	KS5340C	Samsung	Melody circuit	Used in clocks
5380	KS5380A	Samsung	Melody circuit	Used in clocks
5390	KS5390	Samsung	Sound generator	Organ
5570	TEA5570	Signetics	AM/FM receiver	
6057	TSA6057	Signetics	AM/FM tuner	Digital tuning synthesizer

Device	Part Number	Manufacturer	Description	Notes
6103	NJU6103	NJR	Freq. synthesizer	Phase locked loop, CB radio
6200	TEA6200	Signetics	AM receiver	
6420	XR6420 XR6420-2	Exar Exar	Speaker phone Speaker phone	Two chip set, with XR6421
6421	XR6421	Exar	Speaker phone	Two chip set, with XR6420
6425	XR6425	Exar	Speaker phone	
6652	SL6652C	Plessey	FM radio	Quadrature detector, signal strength
6653	SL6653C	Plessey	FM radio	Quadrature detector, signal strength
6691	SL6691C	Plessey	FM radio	FM IR, PLL, RF mixer
6700	SL6700C SL6700A	Plessey Plessey	AM radio AM radio	AM IF and detector AM IF and detector
7000	TDA7000	Signetics	FM receiver	
7001	LC7001	Sanyo	Phase locked loop	NMOS, radio receiver
7010	TDA7010T	Signetics	FM receiver	
7021	TDA7021T	Signetics	FM radio	Single chip radio
7109	YM7109	Yamaha	Fax modem	9600 bps
7157	TA7157A	Toshiba	FM stereo decoder	
7217	LC7217	Sanyo	Phase locked loop	CMOS, radio receiver
7218	LC7218	Sanyo	Phase locked loop	CMOS, radio receiver
7342	TA7342	Toshiba	FM stereo decoder	
7401	TA7401A	Toshiba	FM stereo decoder	
7402	TA7402	Toshiba	AM tuner	Car radio
7515	TS7515	SGS-Thompson	Modem	Bell 212A, CCITT V.22, DPSK
7613	TA7613A	Toshiba	AM/FM receiver	
7616	TA7616	Toshiba	AM tuner	Car radio
7641	TA7641B	Toshiba	AM receiver	
7911	AM7911	AMD	Modem	Bell 103/113/108/202. CCITT V.21/V.23
8361	LM8361	Sanyo	Alarm clock	
8364	LM8364	Sanyo	Alarm clock radio	
9422	STC9422	S-MOS	300 modem	Bell 103

Device	Part Number	Manufacturer	Description	Notes
9424	STC9424C	STC	300 modem	Bell103, power-down mode
9559	UMC9559E	UMC	Tone dialer	
9646	MSM9646	OKI	300 modem	Bell 103
9647	MSM9647	OKI	1200 modem	Bell 103
11002	SC11002	Sierra	Modem	Bell 103
11003	SC11003	Sierra	Modem	Bell 103, -5 volts
11004	SC11004	Sierra	Modem	Bell 103/212A, CCITT V.21/V.22
11006	SC11006	Sierra	Modem	Bell 103/212A, CCITT V.21/.22, V.22 bis
11007	SC11007	Sierra	Modem controller	Used with 300/1200 modems
11008	SC11008	Sierra	Modem controller	Used with 300/1200 modems
11011	SC11011	Sierra	Modem controller	Used with SC11006 modem
11013	SC11013	Sierra	Modem controller	Used with SC11006 modem, 2400 MNP
11014	SC11014	Sierra	Modem	Bell 103/212A, CCITT V.21, V.22
11015	SC11015	Sierra	300/1200 modem	Bell 103/212A, CCITT V.21, V.22
11016	SC11016	Sierra	300/1200 modem	Bell 103/212A, CCITT V.21/V.22
11017	SC11017	Sierra	Modem controller	Used with SC11004/11014/11015 modems
11019	SC11019	Sierra	Modem controller	Used with SC11006 modem, 2400 MNP
11020	SC11020	Sierra	Modem controller	Used with 300/1200 modems
11027	SC11027	Sierra	Modem controller	Used with SC11016 modem
11028	SC11028	Sierra	Modem controller	Used with SC11016 modem
11030	SC11030	Sierra	Fax modem	Analog front end
11033	SC11033	Sierra	Modem, high speed	V.26, V.27, V.29, V.33
11037	SC11037	Sierra	Modem controller	Used with SC11016 modem
12062	HD12062	Hitachi	PLL data strobe	Digital audio tape systems
13020	MC13020	Motorola	AM decoder	Stereo decoder
13022	MC13022	Motorola	AM stereo decoder	Used with MC 13023 receiver/tuner
13023	MC13023	Motorola	AM receiver/tuner	Companion to MC13022 stereo decoder Stereo with tuner stabilizer
13024	MC13024	Motorola	AM stereo receiver	For manually tuned portable radios
13041	MC13041	Motorola	AM receiver	Front end for electronic tuned radios

Device	Part Number	Manufacturer	Description	Notes
13055	MC13055	Motorola	FM IF	Wideband data, 40 MHz
14046	MC14046BC MC14046BA	Motorola Motorola	Phase locked loop Phase locked loop	CMOS, FM circuits CMOS, FM circuits
14412	MC14412 XR14412A	Motorola Exar	Modem Modem	FSK FSK
22212	CD22212E	Harris	Modem	Bell 212A
22421	KA22421	Samsung	AM receiver	Single chip radio
22424	KA22424	Samsung	AM/FM radio	One chip radio
22427	KA22427	Samsung	AM/FM radio	One chip radio
22441	KA22441	Samsung	FM radio	Stereo
22461	KA22461	Samsung	AM receiver	Tuner system (converter, IF amp)
32210	NS32FX210	National	Fax/modem	Analog front end with filter
33120	MC33120	Motorola	Telephone interface	Subscriber loop, PBX34114, MC34114A
34010	MC34010	Motorola	Telephone circuit	Electronic telephone functions
34011	MC34011A	Motorola	Telephone circuit	Electronic telephone functions
34012	MC34012	Motorola	Telephone tone ringer	Telephone bell functions
34013	MC34013A	Motorola	Phone speech/dialer	Tone dialer
34014	MC34014A	Motorola	Phone speech/dialer	Pulse/tone dialer
34017	MC34017	Motorola	Telephone tone ringer	MC34012 plus input current mirror
34018	MC34018	Motorola	Speakerphone	Line powered operation, voice switched
34114	MC34114	Motorola	Phone speech/dialer	Pulse/tone dialer, microphone amp
34117	MC34117	Motorola	Telephone tone ringer	MC34012 minus on-chip diode bridge
34118	MC34118	Motorola	Speakerphone	MC34018 plus filter/dial tone detect
34214	MC34214A	Motorola	Phone speech/dialer	Pulse/tone dialer, microphone amp
35103	TC35103	Toshiba	Fax modem	Analog front end, G2 and G3
35108	TC35108	Yamaha	Fax modem	9600 bps, half duplex
35180	TC35180	Toshiba	Fax	Pixel processor
49202	HD49202	Hitachi	Tape filter	Digital audio tape systems
54932	MM54C932	National	Phase comparitor	FM circuits
58142	MM58142	National	Digital radio tuner	
66330	M66330	Misubishi	Fax controller	Band compression/expansion

Device	Part Number	Manufacturer	Description	Notes
66332	M66332	Misubishi	Fax controller	Graphics processing
68950	TS68950	SGS-Thompson	Modem	Analog front end
68951	TS68951	SGS-Thompson	Modem	Analog front end
68952	TS68952	SGS-Thompson	Modem	Analog front end, xmit/receive, clock
73212	SSI73K212 SSI73K212U	Silicon Syst. Silicon Syst.	Modem Modem/UART	Bell 103/212A SSI73K212 with async receiver/xmitter
74124	SN74S124	TI	VCO	Voice control ocillator, dual
74297	SN74LS297	TI	Phase locked loop	FM circuits
74624	SN74S624	TI	VCO	Voice controlled oscillator
74625	SN74SL625	TI	VCO	Dual channel
74628	SN74S628	TI	VCO	
74629	SN74SL629	TI	VCO	Dual channel
74932	MM74C932	National	Phase comparitor	FM circuits
74942	MM74HC942	National	Modem	Bell 103/113
79101	AM79101	AMD	Modem, autodial	FSK, Bell103/113/108. CCITT V.21
87002	MB87002	Fujitsu	1200 modem	MSK (minimum shift keying)
88561	MB88561	Fujitsu	AM/FM tuner	Digital tuner
88562	MB88562	Fujitsu	AM/FM tuner	Digital tuner
91210	UMC91210	UMC	Phone dialer	Pulse/tone
91214	UMC91214	UMC	Phone dialer	Pulse/tone
91215	UMC91215	UMC	Phone dialer	Pulse/tone
91230	UMC91230C	UMC	Phone dialer	Pulse/tone
91260	UMC91260	UMC	Phone dialer	Pulse/tone, 10 number memory
91261	91261	UMC	Phone dialer	Pulse/tone, 10 number memory
91270	UMC91270	UMC	Phone dialer	Pulse/tone, 20 number memory
91271	UMC91271	UMC	Phone dialer	Pulse/tone, 20 number memory
91272	UMC91272	UMC	Phone dialer	Pulse/tone, 20 number memory
91311	UMC91311	UMC	Phone dialer	Pulse/tone
91531	UMC91531	UMC	Phone dialer	Pulse/tone, parallel input
95088	UMC95088	UMC	Tone dialer	

Device	Part Number	Manufacturer	Device	Notes
95089	UMC95089	UMC	Tone dialer	
145443	MC145443	Motorola	300 modem	Bell 103
153202	HD153202	Hitachi	Synthesizer	Phase locked loop, 100 MHz
732291	SSI73D2291	Silicon Syst.	Fax	TIA/EIA interface
732292	SSI73D2292	Silicon Syst.	Fax	TIA/EIA interface
732331	SSI73D2331	Silicon Syst.	Fax	V.17
732332	SSI73D2332	Silicon Syst.	Fax	V.17
744046	74HC4046A	Signetics	Phase locked loop	CMOS, FM circuits
747046	74HCT7046A 74HC7046A	Signetics Signetics	Phase locked loop Phase locked loop	CMOS, FM circuits CMOS, FM circuits

12/I - PC
Personal Computers

12/I - PC - POST
POST Screen Error Messages

Code	Description
01x	Undetermined problem errors.
02x	Power supply errors.
1xx	System board errors.
101	System board error; Interrupt failure.
102	System board error; Timer failure.
103	System board error; Timer interrupt failure.
104	System board error; Protected mode failure.
105	System board error; Last 8042 command not accepted.
106	System board error; Converting logic test.
107	System board error; Hot non-maskable interrupt test.
108	System board error; Timer bus test.
109	System board error; Memory select error.
110	PS/2 System Board Error; Parity check error.
111	PS/2 Memory adapter error.
112	PS/2 MicroChannel arbitration error.
113	PS/2 MicroChannel arbitration error.
121	Unexpected hardware interrupts occurred.
131	PC system board cassette port wrap test failure.

Code	Description
161	System options not set-(run SETUP); dead battery.
162	System options not set-(run SETUP); CMOS checksum/configuration error.
163	Time & date not set (run SETUP); clock not updating.
164	Memory size error-(Run SETUP); CMOS setting does not match memory.
165	PS/2 System options not set.
166	PS/2 Micro channel adapter time-out error.
199	User indicated INSTALLED DEVICES list is not correct
2xx	Memory (RAM) errors.
201	Memory test failure, error location will be displayed in hexadecimal.
202	Memory address error, address lines 00-15.
203	Memory address error, address lines 16-13.
215	PS/2 Motherboard memory failure.
216	PS/2 Motherboard memory failure.
3xx	Keyboard errors.
301	Keyboard did not respond to software reset or a stuck key failure was detected. If a stuck key was detected, the scan code for the key is displayed in hexadecimal.

Code	Description
302	System Unit Keylock is Locked.
303	Keyboard or system unit error.
304	Keyboard or system unit error; keyboard clock high.
305	PS/2 keyboard fuse (on system board) error.
4xx	Monochrome display adapter (MDA) errors.
4xx	PS/2 System board parallel port errors.
401	Monochrome memory test, horizontal sync frequency test, or video test failure.
401	PS/2 System board parallel port failure.
408	User indicated display attributes failure.
416	User indicated character set failure.
424	User indicated 80x25 mode failure.
432	Parallel port test failure; monochrome display adapter.
5xx	Color Graphics Adapter (CGA) errors.
501	CGA memory test, horizontal sync frequency test, or video test failure.
508	User indicated display attribute failure.
516	User indicated character set failure.
524	User indicated 80x25 mode failure.
540	User indicated 320x200 graphics mode failure.
548	User indicated 640x200 graphics mode failure.
6xx	Floppy drive/adapter errors.
601	Floppy drive/adapter power on self test failure.
602	Drive test failure; disk boot record is not valid.
606	Disk chainline function failure; drive error.
607	Disk is write protected; drive error.
608	Bad command; drive error.
610	Disk initialization failure; track 0 bad.
611	Time-out; drive error.
612	Bad controller chip.
613	Bad direct memory access; drive error.
614	Bad direct memory access; boundary overrun.
615	Bad index timing; drive error.
616	Drive speed error.
621	Bad seek; drive error.
622	Bad cyclic redundancy check; drive error.
623	Record not found; drive error.
624	Bad address mark; drive error.
625	Bad controller chip; seek error.
626	Disk data compare error.
7xx	8087, 80287, or 80397 math coprocessor errors.
9xx	Parallel printer adapter errors.
901	Parallel printer adapter test failure.
10xx	Alternate parallel printer adapter errors.
1001	Alternate parallel printer adapter test failure.
11xx	Asynchronous communications adapter errors.
11xx	PS/2 System board async port errors.
1101	Asynchronous communications adapter test failure.
1102	PS/2 System board async port or serial device error.

Code	Description
1106	PS/2 System board async port or serial device error.
1107	PS/2 System board async port or serial cable error.
1108	PS/2 System board async port or serial device error.
1109	PS/2 System board async port or serial device error.
1112	PS/2 System board async port error.
1118	PS/2 System board async port error.
1119	PS/2 System board async port error.
12xx	Alternate asynchronous communications adapter errors.
12xx	PS/2 Dual async adapter error.
1201	Alternate asynchronous communications adapter test failure.
1202	PS/2 System board async port or serial device error.
1206	PS/2 System board async port or serial device error.
1207	PS/2 System board async port or serial cable error.
1209	PS/2 System board async port or serial device error.
1212	PS/2 System board async port or system board error.
1218	PS/2 System board async port or system board error.
1219	PS/2 System board async port or system board error.
1227	PS/2 System board async port or system board error.

Code	Description
1233	PS/2 System board async port or system board error.
1234	PS/2 System board async port or system board error.
13xx	Game control adapter errors.
1301	Game control adapter test failure.
1302	Joy-stick test failure.
14xx	Matrix printer errors.
15xx	Synchronous data link control (SDLC) communications adapter errors.
1510	8255 port B failure.
1511	8255 port A failure.
1512	8255 port C failure.
1513	8253 timer 1 did not reach terminal count.
1514	8253 timer 1 stuck on.
1515	8253 timer 0 did not reach terminal count.
1516	8253 timer 0 stuck on.
1517	8253 timer 2 did not reach terminal count.
1518	8253 timer 2 stuck on.
1519	8253 port B error.
1520	8273 port A error.
1521	8273 command/read time-out.
1522	Interrupt level 4 failure.
1523	Ring Indicate stuck on.
1524	Receive clock stuck on.
1525	Transmit clock stuck on.
1526	Test indicate stuck on.

Code	Description	Code	Description
1527	Ring indicate not on.	1781	Fixed disk 1 failure.
1528	Receive clock not on.	1782	Fixed disk controller failure.
1529	Transmit clock not on.	1790	Fixed disk 0 error.
1530	Test indicate not on.	1791	Fixed disk 1 error.
1531	Data set ready not on.	18xx	I/O expansion unit errors.
1532	Carrier detect not on.	1801	I/O expansion unit POST error.
1533	Clear to send not on.	1810	Enable/Disable failure.
1534	Data set ready stuck on.	1811	Extender card wrap test failure; disabled.
1536	Clear to send stuck on.	1812	High order address lines failure; disabled.
1537	Level 3 interrupt failure.	1813	Wait state failure; disabled.
1538	Receive interrupt failure.	1814	Enable/Disable could not be set on.
1539	Wrap data compare error.	1815	Wait state failure; disabled.
1540	Direct memory access channel 1 error.	1816	Extender card wrap test failure; enabled.
1541	Direct memory access channel 1 error.	1817	High order address lines failure; enabled.
1542	Error in 8273 error checking or status reporting.	1818	Disable not functioning.
1547	Stray interrupt level 4.	1819	Wait request switch not set correctly.
1548	Stray interrupt level 3.	1820	Receiver card wrap test failure.
1549	Interrupt presentation sequence time-out.	1821	Receiver high order address lines failure.
16xx	Display emulation errors (327x, 5520, 525x).	19xx	3270 PC attachment card errors.
17xx	Fixed disk errors.	20xx	Binary sychronous communications (BSC) adapter errors.
1701	Fixed disk adapter error.	2010	8255 port A failure.
1702	Fixed disk adapter error.	2011	8255 port B failure.
1703	Fixed disk drive error.	2012	8255 port C failure.
1704	Fixed disk adapter or drive error.	2013	8253 timer 1 did not reach terminal count.
1780	Fixed disk 0 failure.	2014	8253 timer 1 stuck on.

Code	Description
2015	8253 timer 2 did not reach terminal count or timer 2 stuck on.
2017	8251 Data set read failed to come on.
2018	8251 Clear to send not sensed.
2019	8251 Data set read stuck on.
2020	8251 Clear to send struck on.
2021	8251 hardware reset failure.
2022	8251 software reset failure.
2023	8251 software "error reset" failure.
2024	8251 transmit ready did not come on.
2025	8251 receive ready did not come on.
2026	8251 could not force "overrun" error status.
2027	Interrupt failure; no timer interrupt.
2028	Interrupt failure; transmit, replace card or planar.
2029	Interrupt failure; transmit, replace card.
2030	Interrupt failure; receive, replace card or planar.
2031	Interrupt failure; receive, replace card.
2033	Ring indicate stuck on.
2034	Recieve clock stuck on.
2035	Transmit clock stuck on.
2036	Test indicate stuck on.
2037	Ring indicate stuck on.
2038	Receive clock not on.
2039	Transmit clock not on.
2040	Data set ready not on.
2041	Data set ready not on.
2042	Carrier detect not on.
2043	Clear to send not on.
2044	Data set ready stuck on.
2045	Carrier detect struck on.
2046	Clear to send stuck on.
2047	Unexpected transmit interrupt.
2048	Unexpected receive interrupt.
2049	Transmit data did not equal receive data.
2050	8251 detected overrun error.
2051	Lost data set ready during data wrap.
2052	Receive time-out during data wrap.
21xx	Alternate binary synchronous communications adapter errors.
2110	8255 port A failure.
2111	8255 port B failure.
2112	8255 port C failure.
2113	8253 timer 1 did not reach terminal count.
2114	8253 timer 1 stuck on.
2115	8253 timer 2 did not reach terminal count or timer 2 stuck on.
2117	8251 Data set ready failed to come on.
2118	8251 Clear to send not sensed.
2119	8251 Data set ready stuck on.
2120	8251 Clear to send stuck on.
2121	8251 hardware reset failure.
2122	8251 software reset failure.

Code	Description
2123	8251 software "error rest" failure.
2124	8251 transmit ready did not come on.
2125	8251 receive ready did not come on.
2126	8251 could not force "overrun" error status.
2127	Interrupt failure; no timer interrupt.
2128	Interrupt failure; transmit, replace card or planar.
2129	Interrupt failure; transmit, replace card.
2130	Interrupt failure; receive, replace card or planar.
2131	Interrupt failure; receive, replace card.
2133	Ring indicate stuck on.
2134	Receive clock stuck on.
2135	Transmit clock stuck on.
2136	Test indicate stuck on.
2137	Ring indicate stuck on.
2138	Receive clock not on.
2139	Transmit clock not on.
2140	Test indicate not on.
2141	Data set ready not on.
2142	Carrier detect not on.
2143	Clear to send not on.
2144	Data set ready stuck on.
2145	Carrier detect stuck on.
2146	Clear to send stuck on.
2147	Unexpected transmit interrupt.
2148	Unexpected receive interrupt.
2149	Transmit data did not equal receive data.
2150	8251 deteted overrun error.
2151	Lost data set ready during data wrap.
2152	Receive time-out during data wrap.
22xx	Cluster adapter errors.
24xx	Enhanced Graphics Adapter (EGA) errors.
24xx	PS/2 System board Video Graphics Array (VGA) errors.
26xx	XT/370 errors.
27xx	AT/370 errors.
28xx	3278/79 emulation adapter errors.
29xx	Color/graphics printer errors.
30xx	Primary PC network adapter errors.
3001	Processor test failure.
3002	ROM checksum test failure.
3003	Unit ID PROM test failure.
3004	RAM test failure.
3005	Host interface controller test failure.
3006	+/- 12 V test failure.
3007	Digital loopback test failure.
3008	Host detected host interface controller failure.
3009	Sync failure and no Go bit.
3010	Host interface controller test ok and no go bit.
3011	Go bit and no command 41.
3012	Card not present.
3013	Digital failure; fall through.

Code	Description
3015	Analog failure.
3041	Hot carrier; not this card.
3042	Hot carrier; this card!
31xx	Secondary PC network adapter errors.
3101	Processor test failure.
3102	ROM checksum test failure.
3103	Unit ID PROM test failure.
3104	RAM test failure.
3105	Host interface controller test failure.
3106	+/- 12 V test failure.
3107	Digital loopback test failure.
3108	Host detected host interface controller failure.
3109	Sync failure and no Go bit.
3110	Host interface controller test OK and no go bit.
3111	Go bit and no Command 41.
3112	Card not present.
3113	Digital failure; fall through.
3114	Analog failure.
3115	Hot carrier; not this card.
3142	Hot carrier; this card!
33xx	Compact printer errors.
36xx	General purpose interface bus (GPIB) adapter errors.
38xx	Data acquisition adapter errors.
39xx	Professional graphics controller errors.
71xx	Voice communications adapter errors.

Code	Description
73xx	3.5-inch external disk drive errors.
7306	Disk changeline function failure; drive error.
7307	Disk is write protected; drive error.
7308	Bad command; drive error.
7310	Disk initialization failure; track 0 bad.
7311	Time-out; drive error.
7312	Bad controller chip.
7313	Bad direct memory access; drive error.
7314	Bad direct memory access; boundary overrun.
7315	Bad index timing; drive error.
7316	Drive speed error.
7322	Bad cyclic redundancy check; drive errors.
7323	Record not found; drive error.
7324	Bad address mark; drive error.
7325	Bad controller chip; seek error.
74xx	IBM PS/2 Display adapter (VGA card) errors.
85xx	IBM Expanded memory adapter (XMA) errors.
86xx	PS/2 pointing device errors.
8601	PS/2 pointing device error.
8602	PS/2 pointing device error.
8603	PS/2 pointing device error or system board failure.
89xx	Music feature card errors.
100xx	PS/2 Multiprotocol adapter errors.
10002	PS/2 Multiprotocol adapter or serial device error.

Code	Description	Code	Description
10006	PS/2 Multiprotocol adapter or serial device error.	10042	PS/2 Multiprotocol adapter or system board error.
10007	PS/2 Multiprotocol adapter or communications cable error.	10056	PS/2 Multiprotocol adapter or system board error.
10008	PS/2 Multiprotocol adapter or serial device error.	104xx	PS/2 ESDI fixed disk errors.
10009	PS/2 Multiprotocol adapter or serial device error.	10480	PS/2 ESDI fixed disk 0 failure.
10012	PS/2 Multiprotocol adapter or system board error.	10481	PS/2 ESDI fixed disk 1 failure.
10018	PS/2 Multiprotocol adapter or system board error.	10482	PS/2 ESDI fixed disk controller failure.
10019	PS/2 Multiprotocol adapter or system board error.	10483	PS/2 ESDI fixed disk controller failure.
		10490	PS/2 ESDI fixed disk 0 error.
		10491	PS/2 ESDI fixed disk 1 error.

12/S - A
An Introduction

Schematics provide invaluable information to repair technicians. The schematics included in this manual give an example of the inner circuitry of various electronic devices.

The schematics were chosen because of their illustrative ability, not due to any defects in the covered device. Schematics to deficient devices were not selected for this manual.

The schematics are reprinted at the permission of the manufacturers. Neither WEKA Publishing nor the manufacturers are responsible for any schematic errors, or any injury sustained to individuals working on a device while using these schematics for guidance.

Please follow proper safety precautions. For safety information, refer to Section *"2/3 Safety Procedures."*

12/S Schematics

12/S - Amp	Amplifiers
12/S - Amp - Ken	Kenwood
12/S - Amp - Ken - KAC-8020 (Pages 1-2)	KAC-8020

Kenwood KAC-8020 Car Amplifier

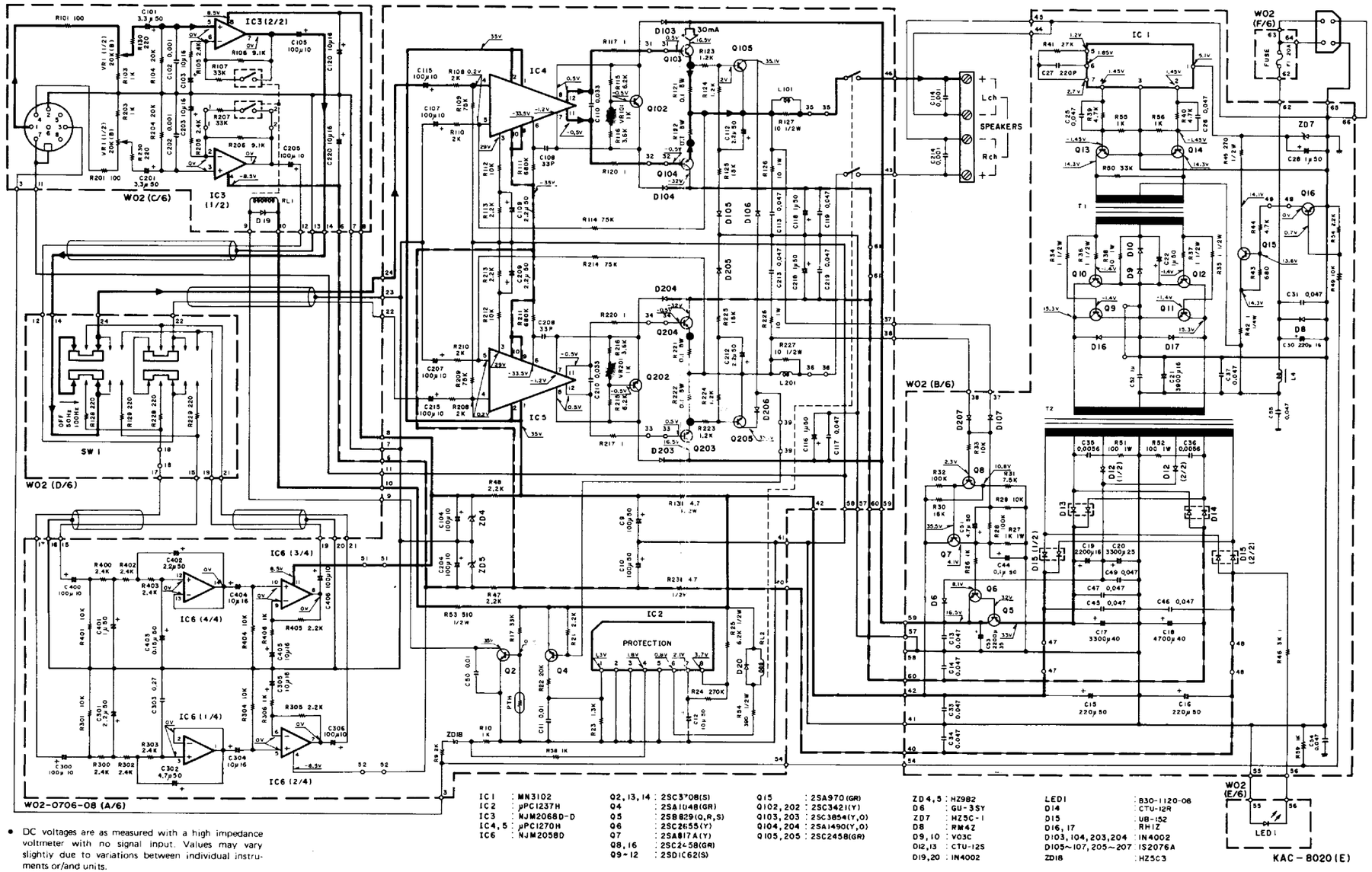

- DC voltages are as measured with a high impedance voltmeter with no signal input. Values may vary slightly due to variations between individual instruments or/and units.

KAC-8020 schematic diagram

12/S Schematics

12/S - CA	Car Amplifier
12/S - CA - So	Sony
12/S - CA - So - XM-3040 (Pages 1-3)	XM-3040

Sony XM-3040 Car Amplifier

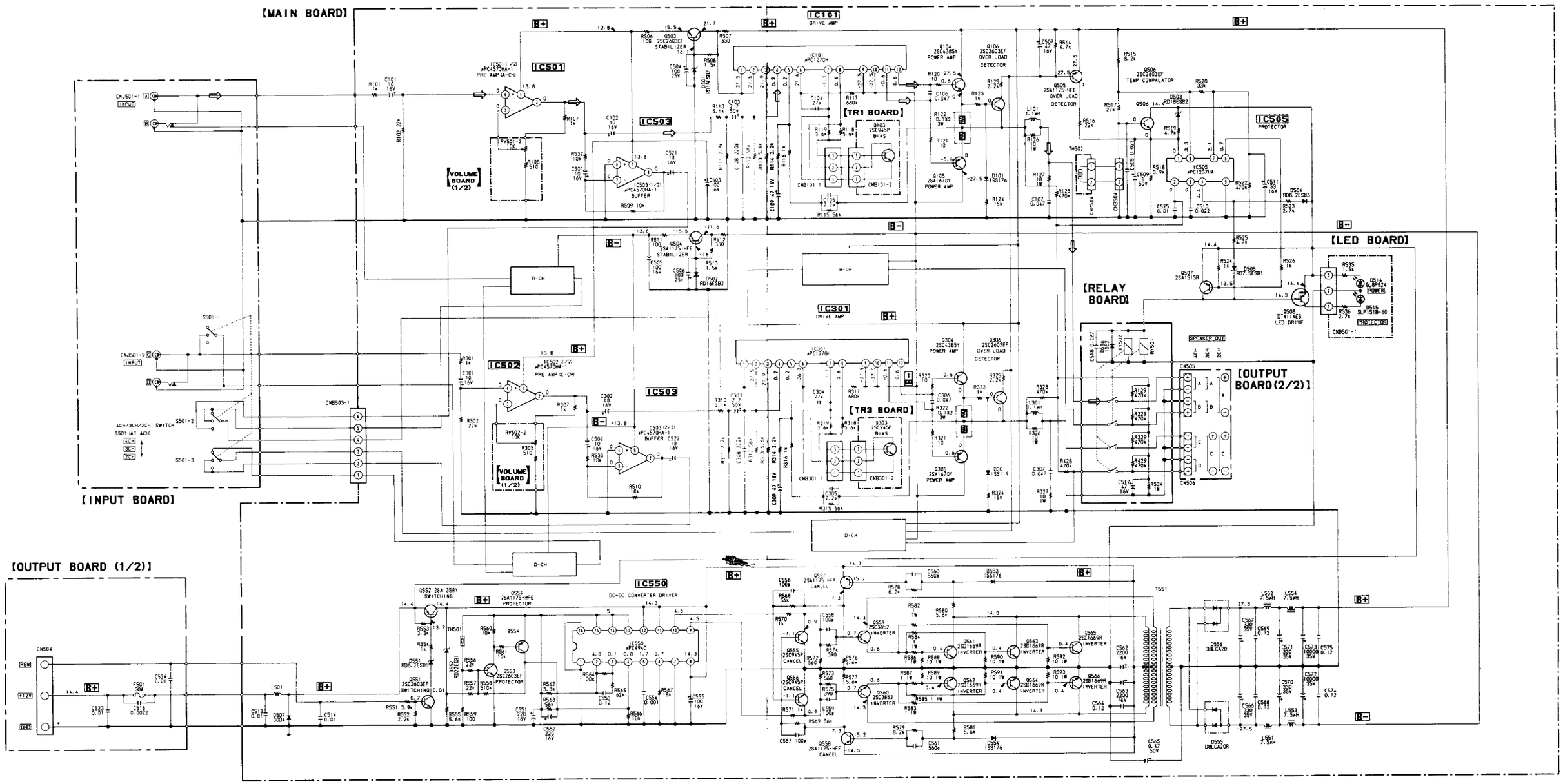

Courtesy of Sony Corporation

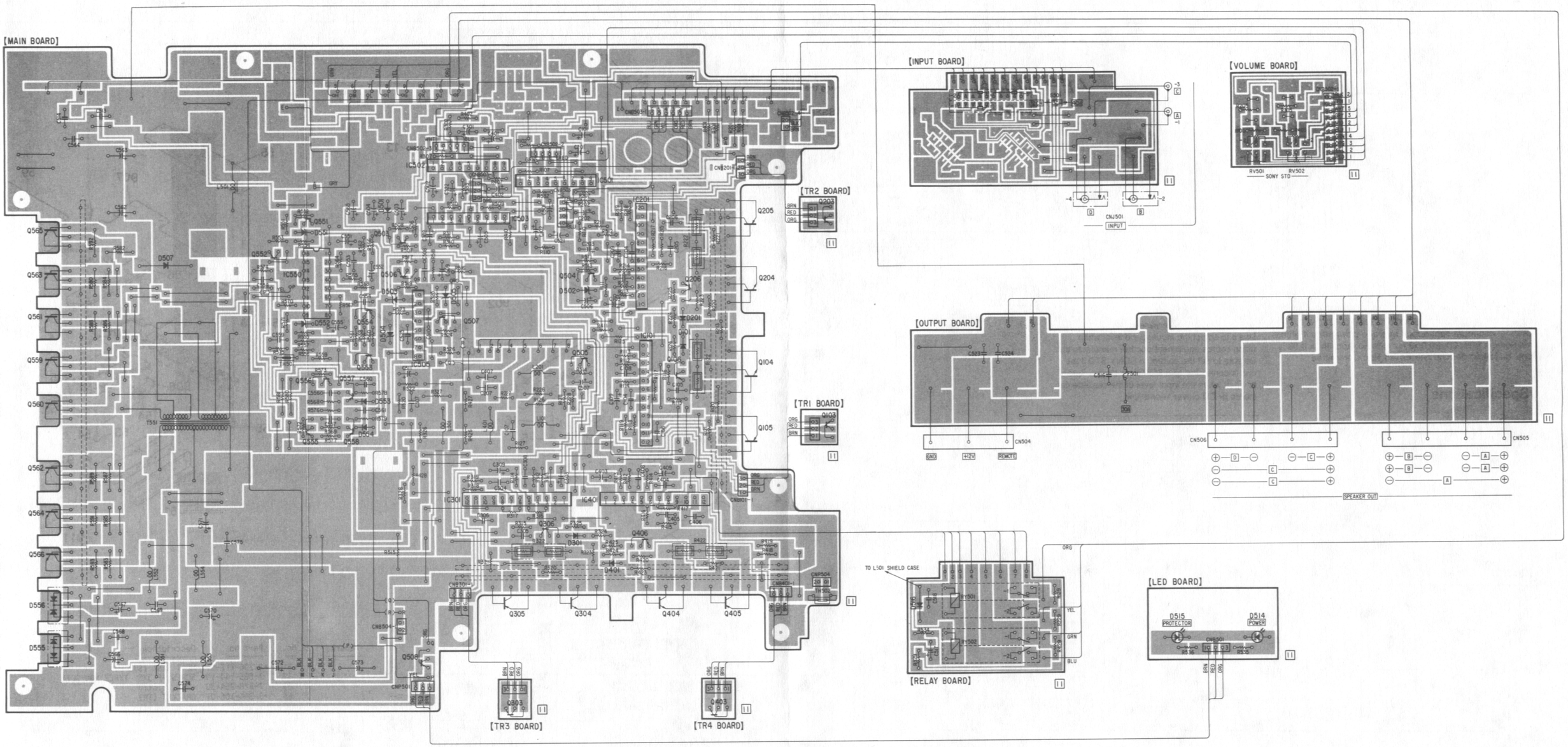

XM-3040 car amplifier wiring board

Panasonic PV-602, PV-604 and PV-610 Camcorders

TEST POINT INFORMATION
⊘ : USED FOR THE INDICATION OF TEST POINT WITH NO TEST PIN.
● : USED FOR THE INDICATION OF TEST POINT WITH TEST PIN.

NOTE : MARK "●" IS LEADLESS (CHIP) COMPONENT

NOTE : HOW TO READ CONVERGED LINES
(100) B4
LOCATION GRID OF THE OTHER END OF THE LINE
LINE NUMBER

YH & PREVIDEO SIGNAL PATH

CHROMA (PREVIDEO) SIGNAL PATH

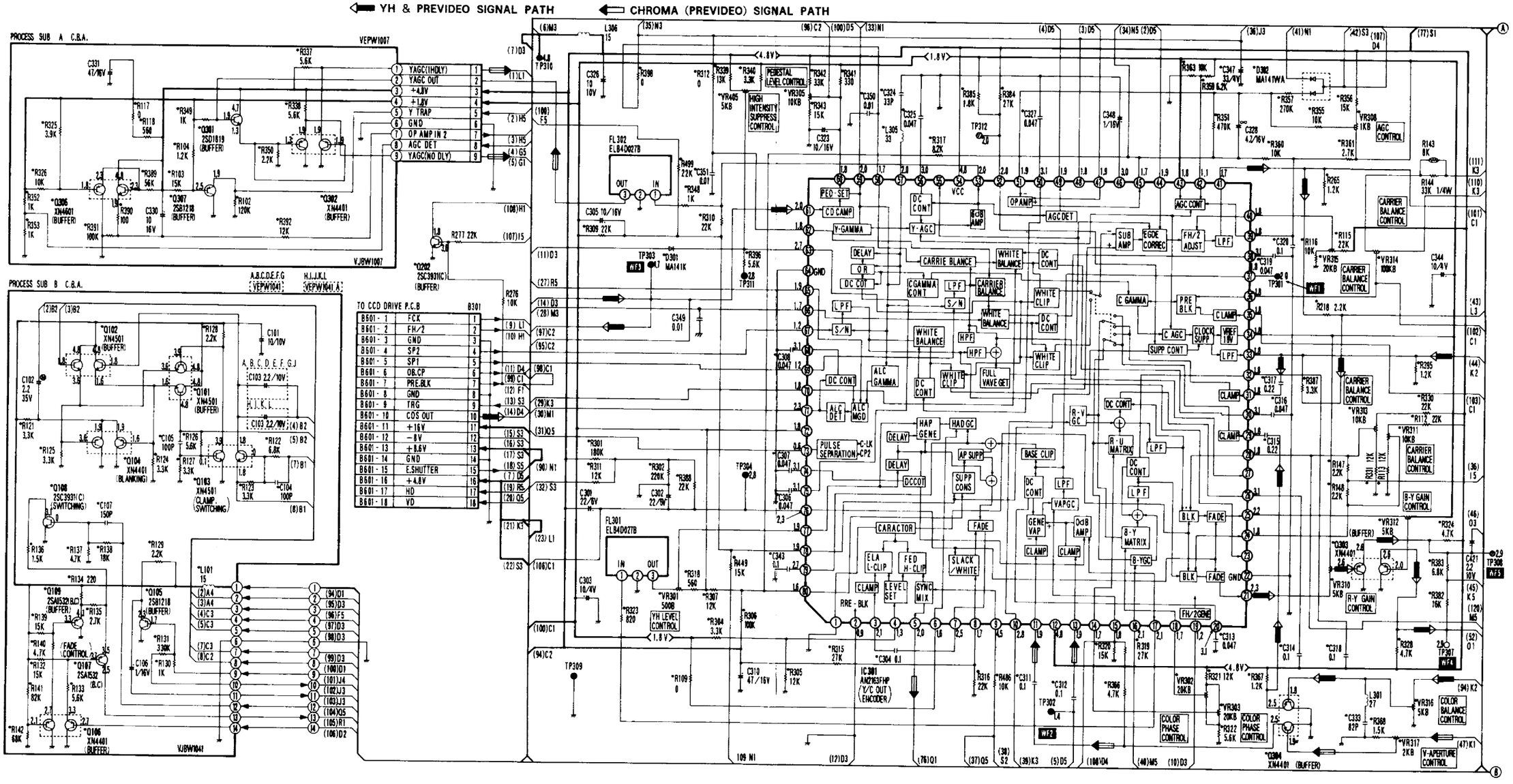

PV-602, PV-604 and PV-610 process schematic (I)

NOTE : MARK "●" IS LEADLESS
(CHIP) COMPONENT

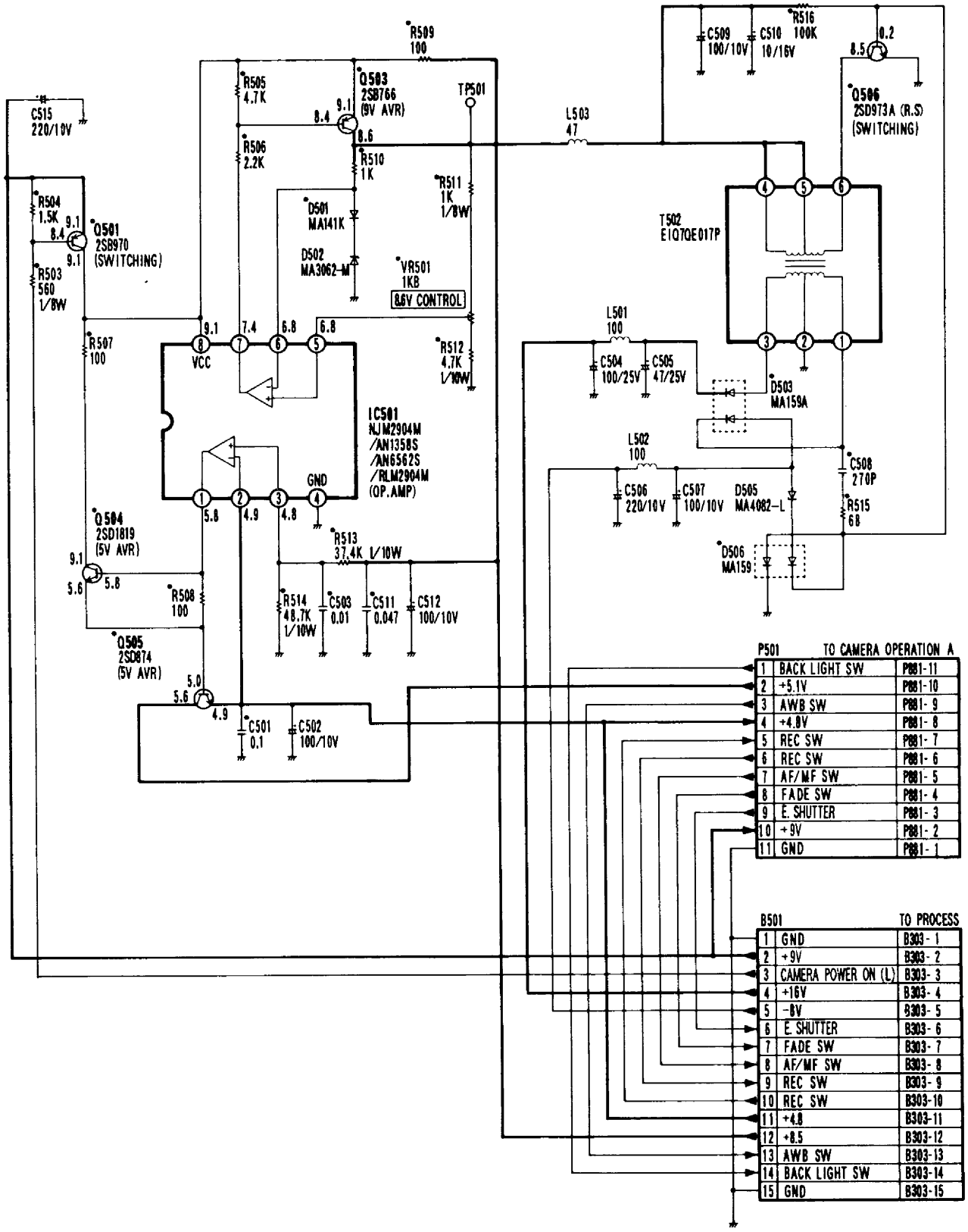

PV-602, PV-604 and PV-610 camera power supply schematic

TEST POINT INFORMATION

▨ : USED FOR THE INDICATION OF TEST POINT WITH NO TEST PIN.

● : USED FOR THE INDICATION OF TEST POINT WITH TEST PIN.

NOTE : MARK "●" IS LEADLESS (CHIP) COMPONENT

NOTE : HOW TO READ CONVERGED LINES

(100) B4

LOCATION GRID OF THE OTHER END OF THE LINE

LINE NUMBER

YH & PREVIDEO SIGNAL PATH

CHROMA (PREVIDEO) SIGNAL PATH

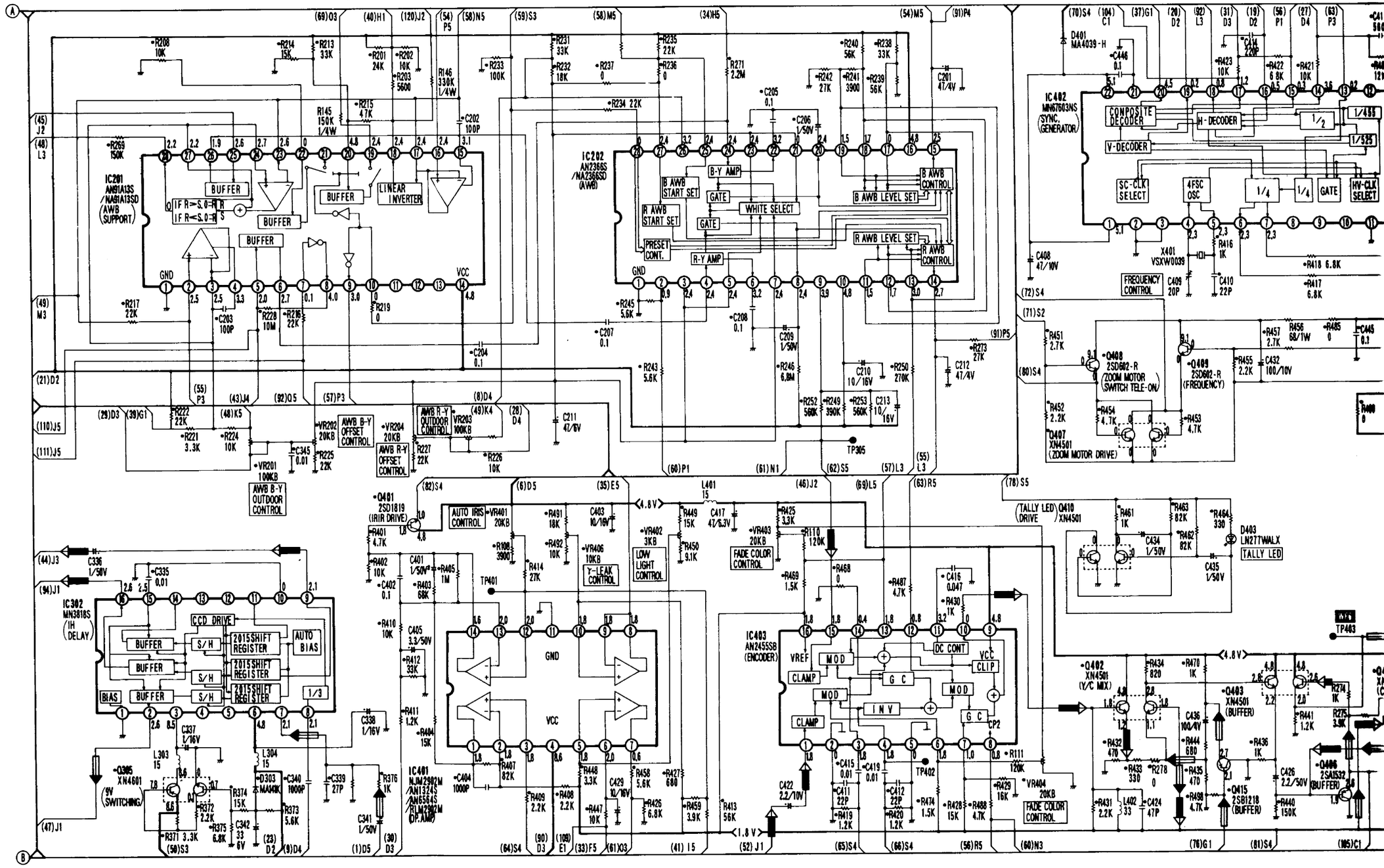

PV-602, PV-604 and PV-610 process schematic (II)

NOTE : HOW TO READ CONVERGED LINES
(100) B4
LOCATION GRID OF THE OTHER END OF THE LINE
LINE NUMBER

N. NOTE : MARK "●" IS LEADLESS (CHIP) COMPONENT

YH & PREVIDEO SIGNAL PATH

CHROMA (PREVIDEO) SIGNAL PATH

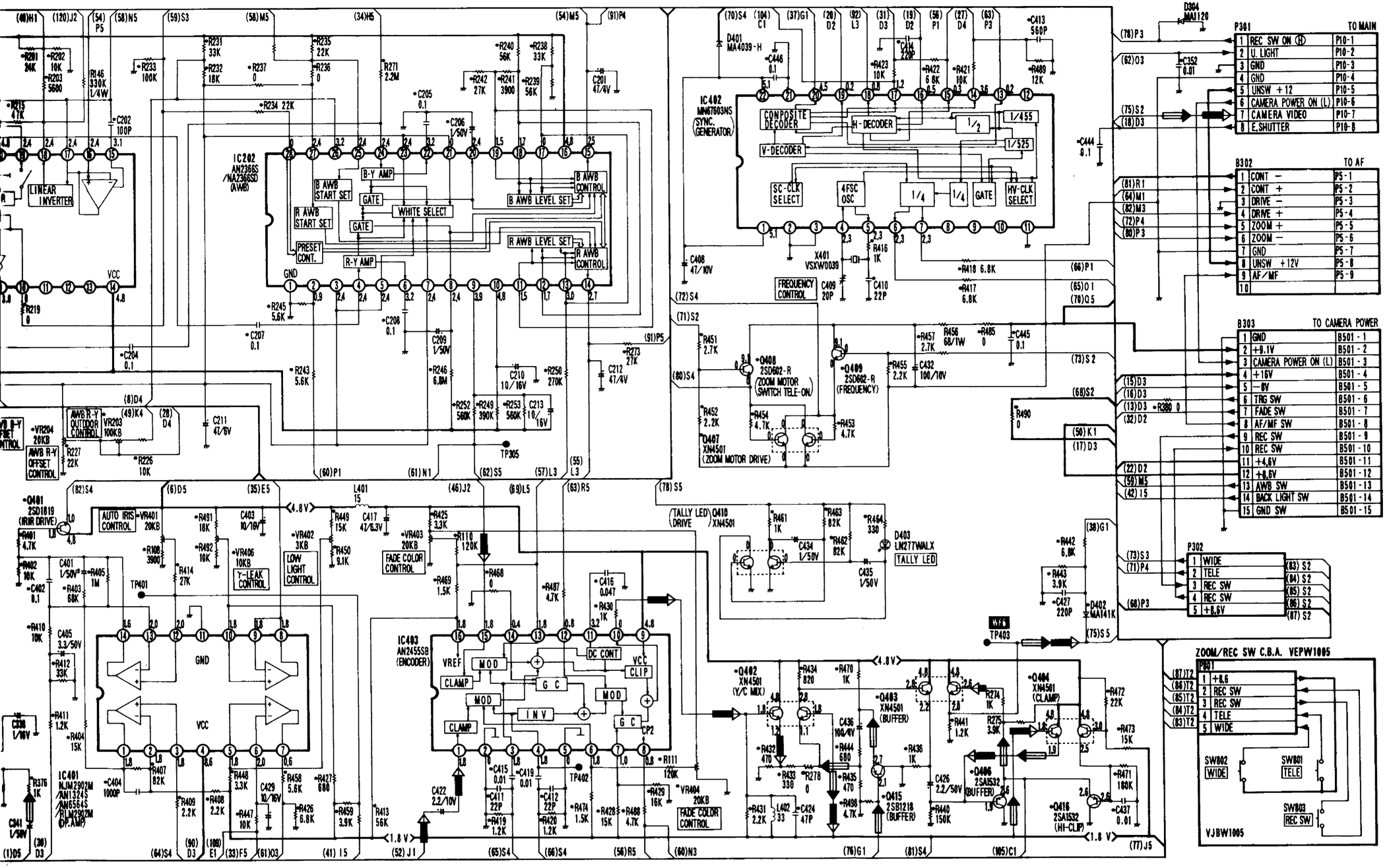

UNLESS OTHERWISE SPECIFIED :
WATTAGE OF RESISTORS ARE 1/16W.

TEST POINT INFORMATION
⊘ : USED FOR THE INDICATION OF TEST POINT WITH NO TEST PIN.
● : USED FOR THE INDICATION OF TEST POINT WITH TEST PIN.

NOTE : MARK "●" IS LEADLESS (CHIP) COMPONENT

NOTE : * 1 Loading Motor Drive IC6004 with thermal Shut Down Function
Loading Motor Drive IC6004 has a thermal shut down function to prevent overheating.
Therefore, when the temperature of IC6004 raises for some reason, IC6004 will shut down by itself.
And the unit will go to power off due to loading lock detection. However, when the temperature of IC6004 returns to normal, IC6004 will resume operation. Then unit will be fully operational.
(Please make sure if the thermal shut down is operated before replacing.)

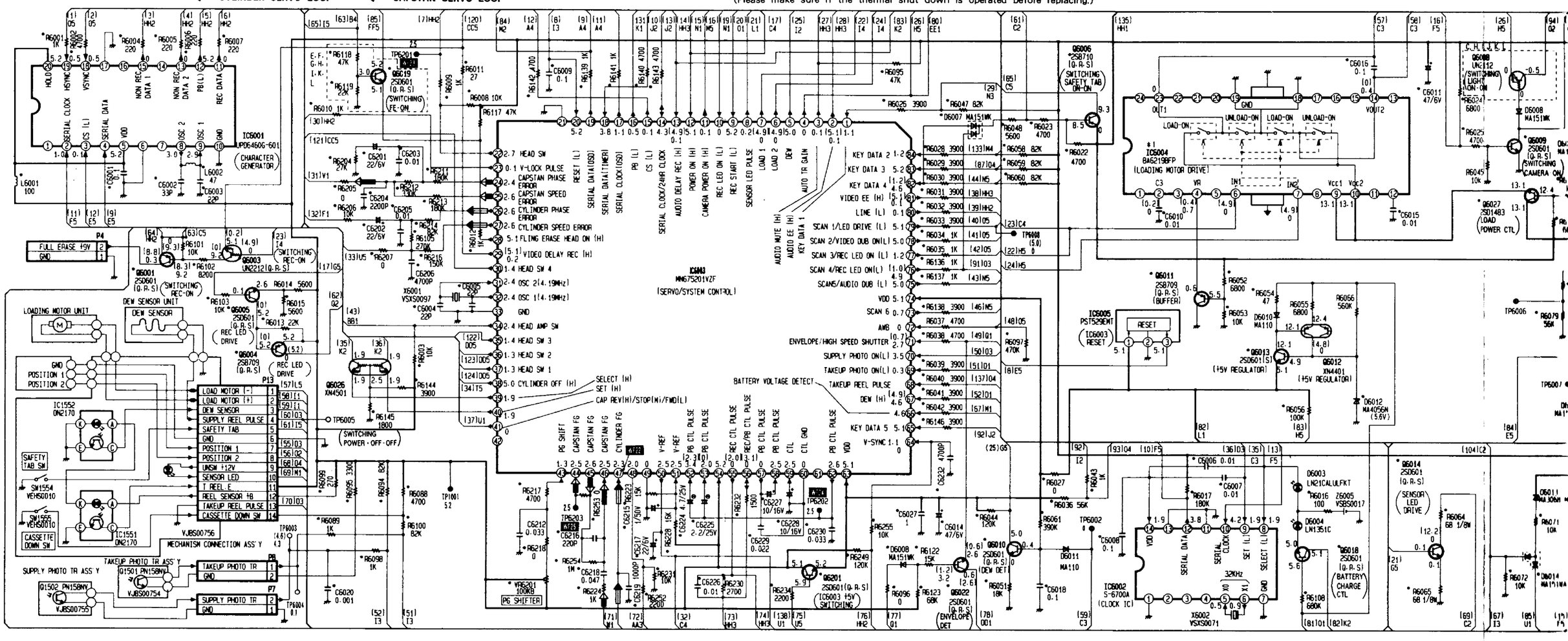

PV-602, PV-604 and PV-610 servo/system control schematic

Panasonic PV-602, PV-604 and PV-610 Camcorders

●"IS LEADLESS
OMPONENT

NOTE : ＊1 Loading Motor Drive IC6004 with thermal Shut Down Function
Loading Motor Drive IC6004 has a thermal shut down function to prevent overheating.
Therefore, when the temperature of IC6004 raises for some reason, IC6004 will shut down by itself.
And the unit will go to power off due to loading lock detection. However, when the temperature of IC6004 returns to normal, IC6004 will resume operation. Then unit will be fully operational.
(Please make sure if the thermal shut down is operated before replacing.)

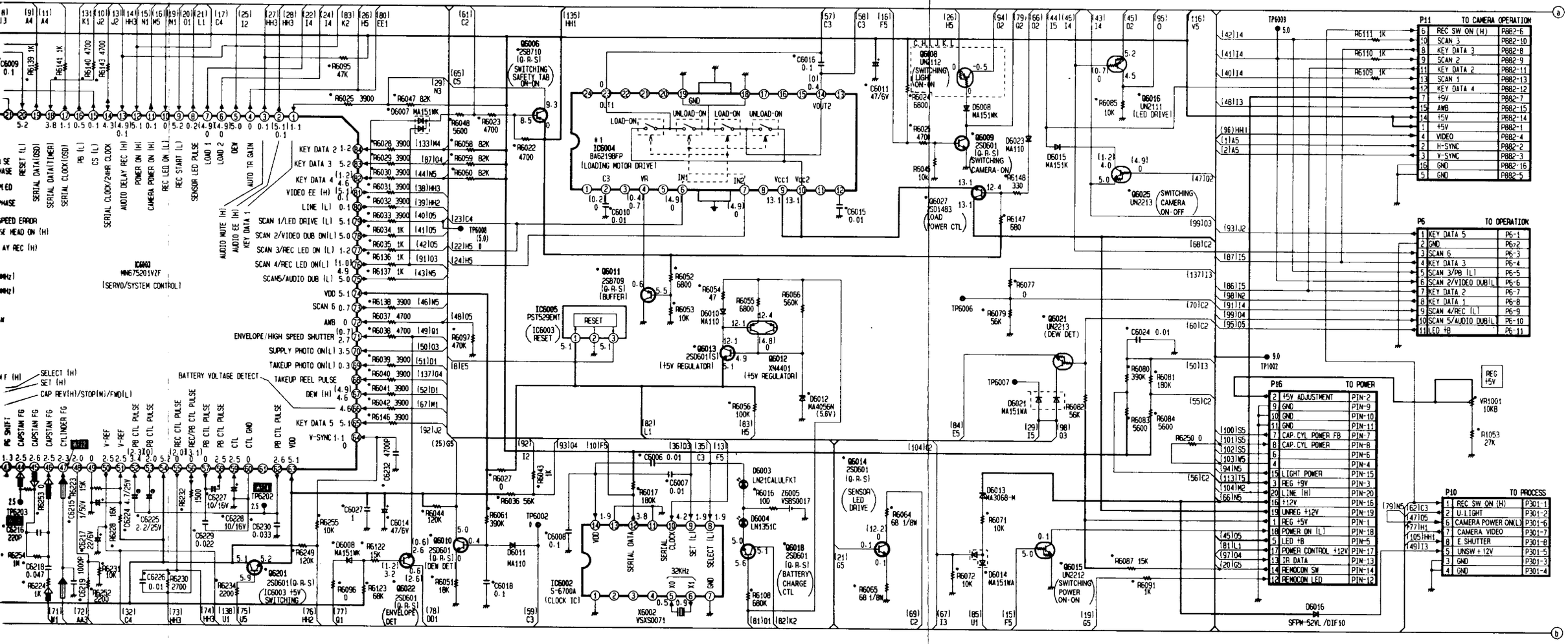

TEST POINT INFORMATION
⊘ : USED FOR THE INDICATION OF TEST POINT WITH NO TEST PIN.
● : USED FOR THE INDICATION OF TEST POINT WITH TEST PIN.

NOTE : MARK "●" IS LEADLESS (CHIP) COMPONENT

NOTE : HOW TO READ CONVERGED LINES
(100) B4
LOCATION GRID OF THE OTHER END OF THE LINE
LINE NUMBER

⇦ CYLINDER SERVO LOOP ⇦ CAPSTAN SERVO LOOP ⇦ VIDEO REC MODE ⇦ VIDEO PB MODE

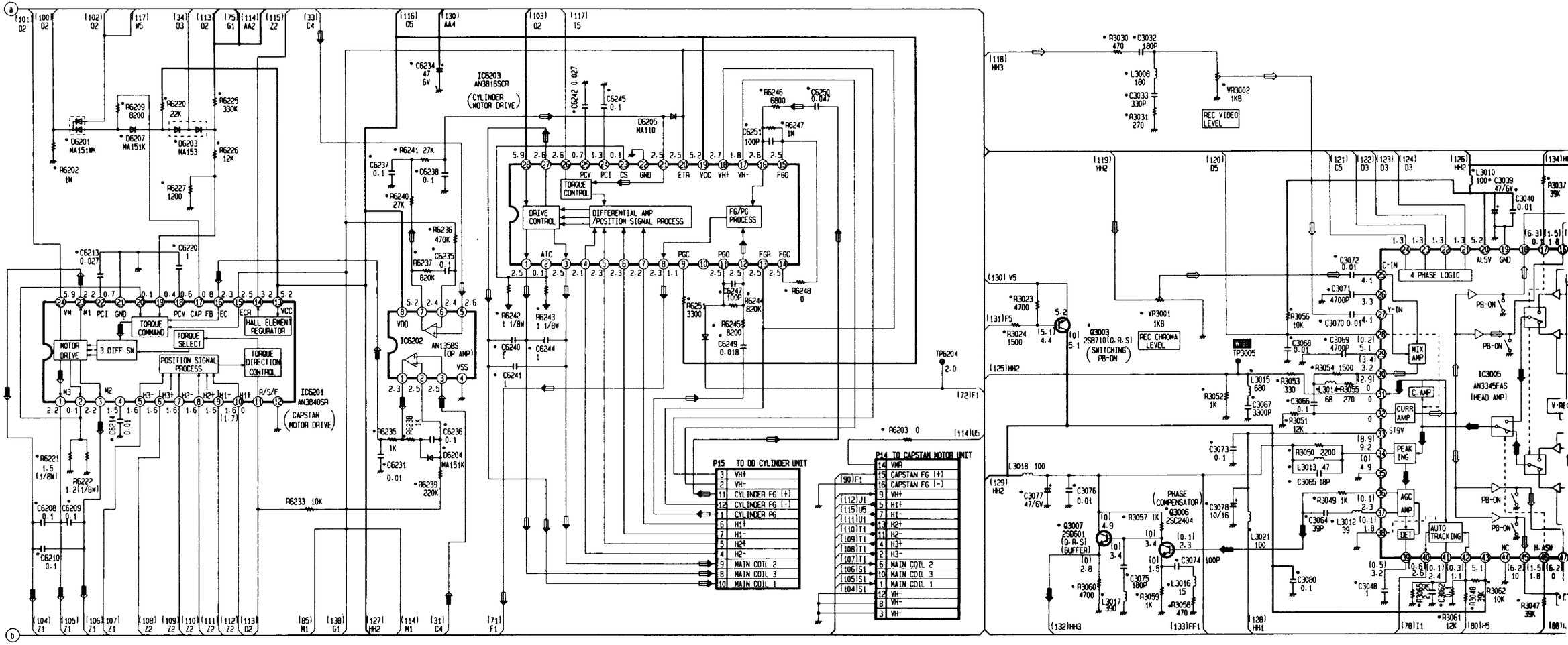

NOTE: HOW TO READ CONVERGED LINES
(100) B4
LOCATION GRID OF THE OTHER END OF THE LINE
LINE NUMBER

LOOP ⇦ VIDEO REC MODE ⬅ VIDEO PB MODE

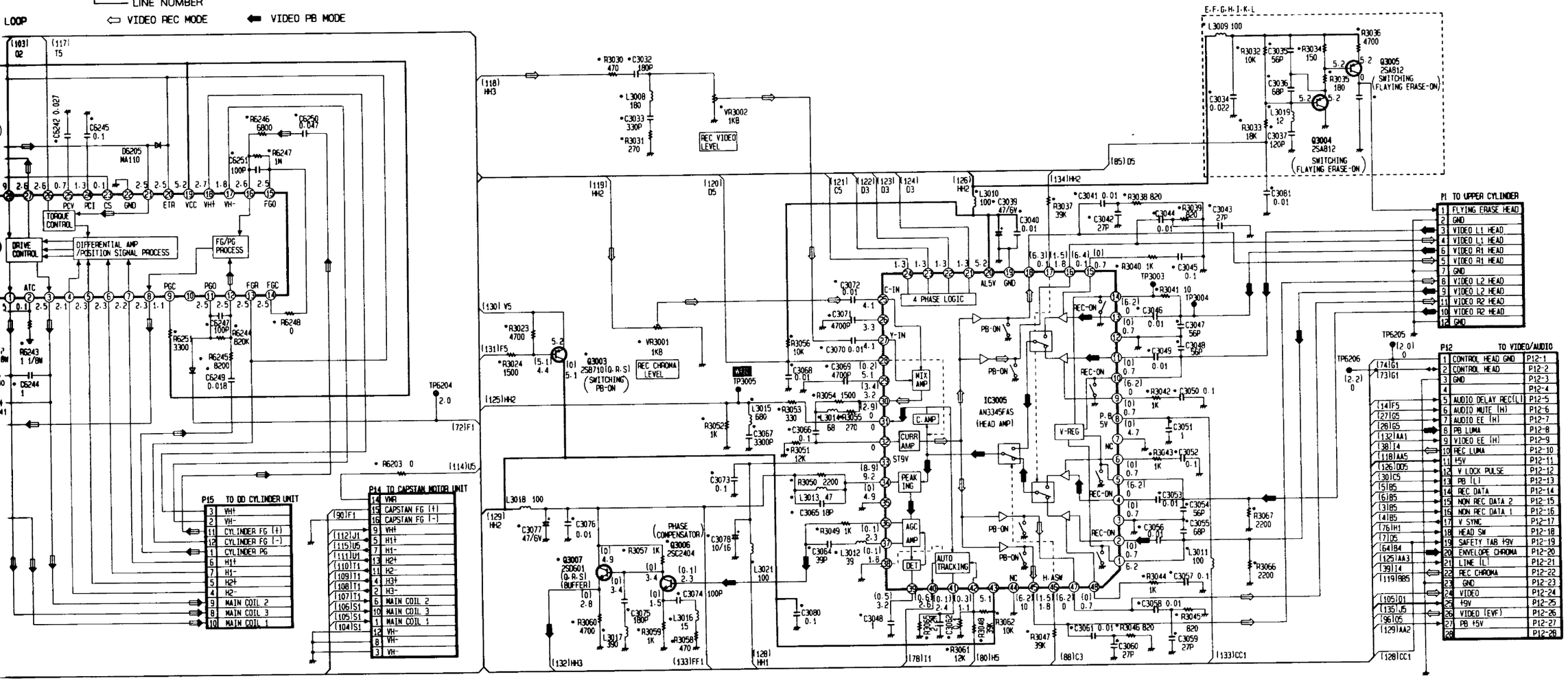

1	FLYING ERASE HEAD	
2	GND	
3	VIDEO L1 HEAD	
4	VIDEO L1 HEAD	
6	VIDEO A1 HEAD	
5	VIDEO A1 HEAD	
7	GND	
8	VIDEO L2 HEAD	
9	VIDEO L2 HEAD	
11	VIDEO R2 HEAD	
10	VIDEO R2 HEAD	
12	GND	

1	CONTROL HEAD GND	P12-1
2	CONTROL HEAD	P12-2
3	GND	P12-3
4		P12-4
5	AUDIO DELAY REC(L)	P12-5
6	AUDIO MUTE (H)	P12-6
7	AUDIO EE (H)	P12-7
8	PB LUMA	P12-8
9	VIDEO EE (H)	P12-9
10	REC LUMA	P12-10
11	+5V	P12-11
12	V LOCK PULSE	P12-12
13	PB (L)	P12-13
14	REC DATA	P12-14
15	NON REC DATA 2	P12-15
16	NON REC DATA 1	P12-16
17	V SYNC	P12-17
18	HEAD SW	P12-18
19	SAFETY TAB +9V	P12-19
20	ENVELOPE CHROMA	P12-20
21	LINE (L)	P12-21
22	REC CHROMA	P12-22
23	GND	P12-23
24	VIDEO	P12-24
25	+9V	P12-25
26	VIDEO (EVF)	P12-26
27	PB +5V	P12-27
28		P12-28

12/S Schematics

12/S - CD	Compact Disc Player
12/S - CD - Hi	Hitachi
12/S - CD - Hi-DA-C60 (Pages 1 - 4)	DA-C60

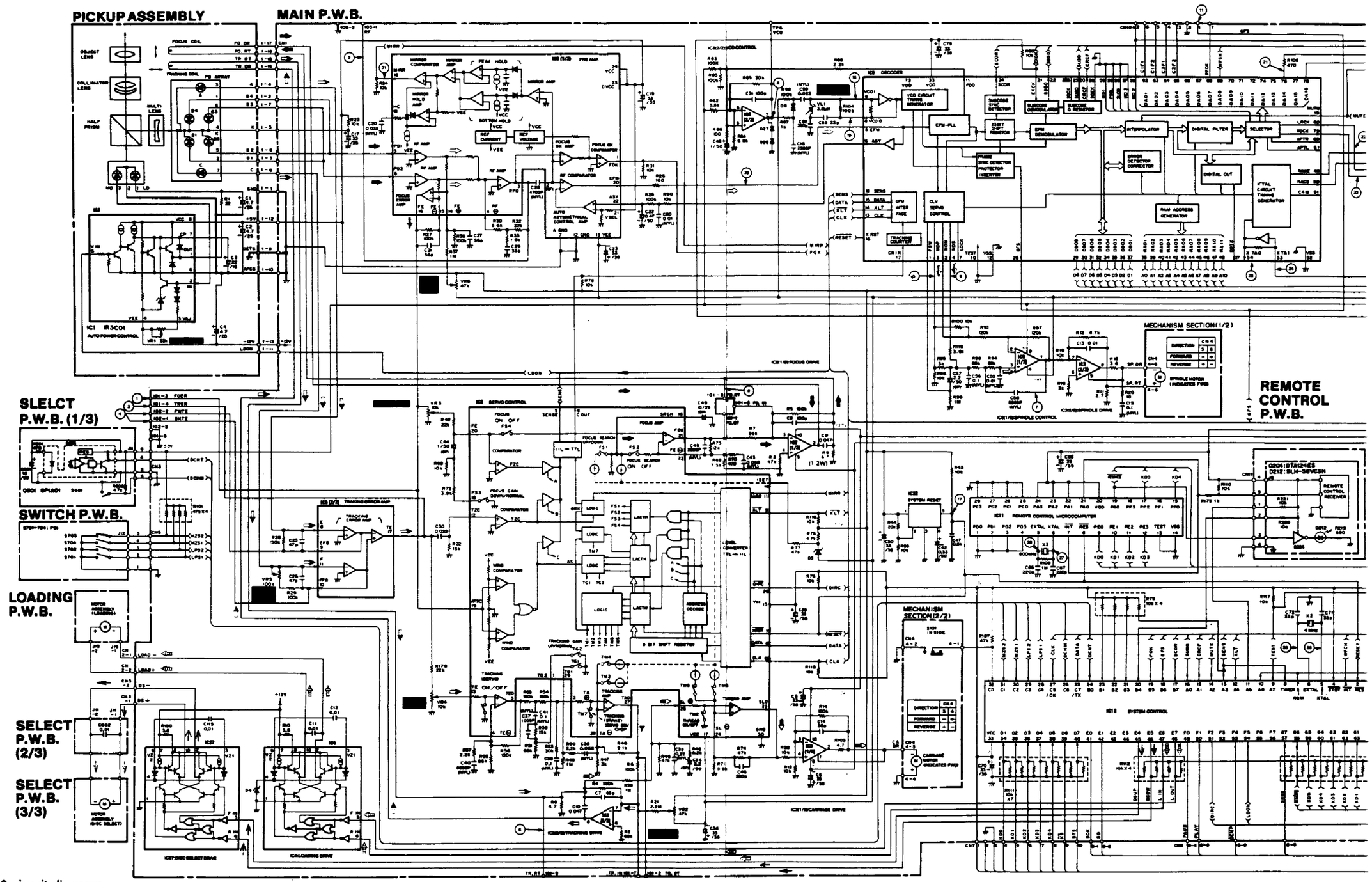

DA-C60 circuit diagram

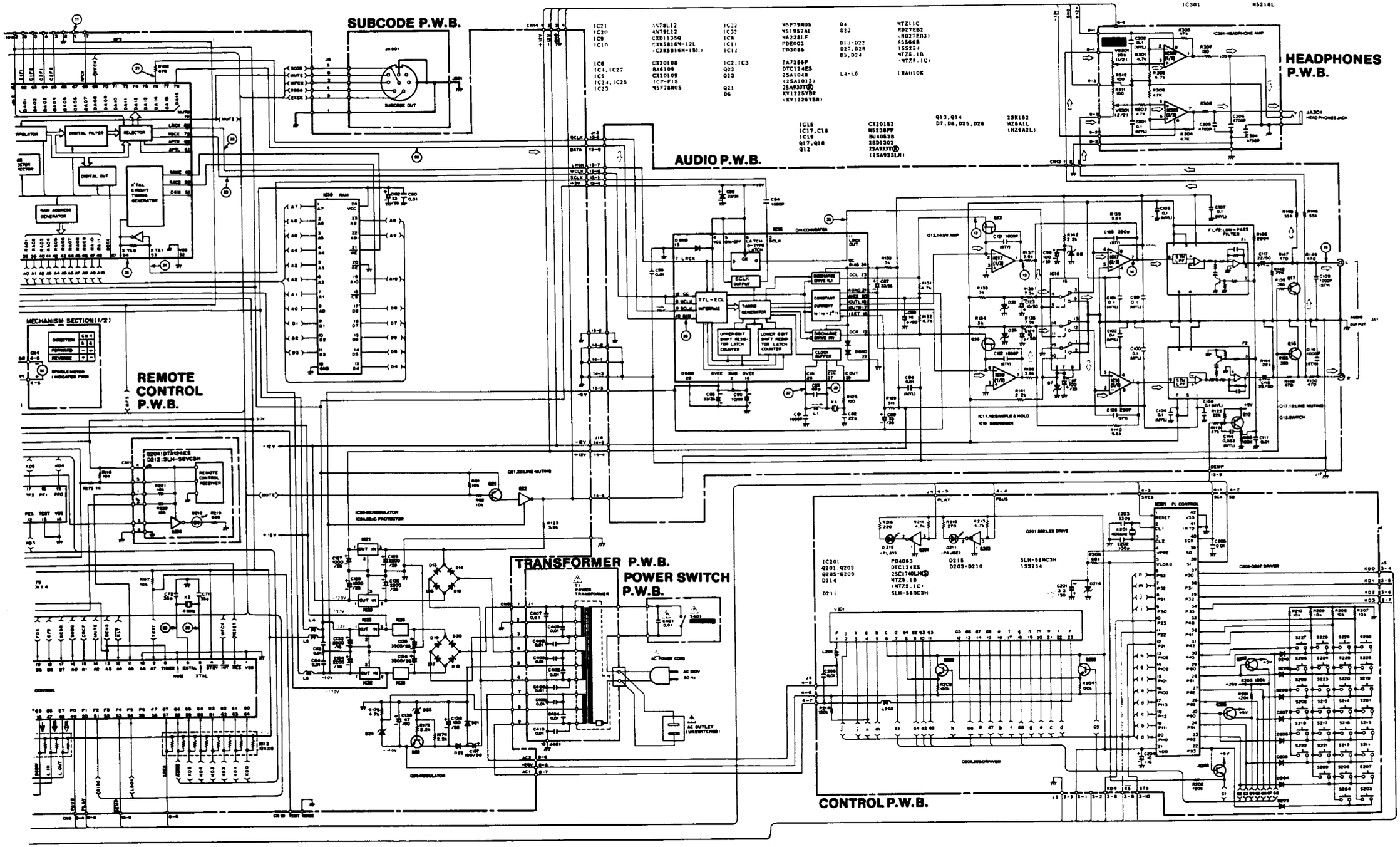

DA-C60 circuit diagram (continued)

12/S Schematics

12/S - CD	Compact Disc
12/S - CD - So	Sony
12/S - CD - So - D-5 (Pages 1-4)	D-5

Sony D-5 Discman

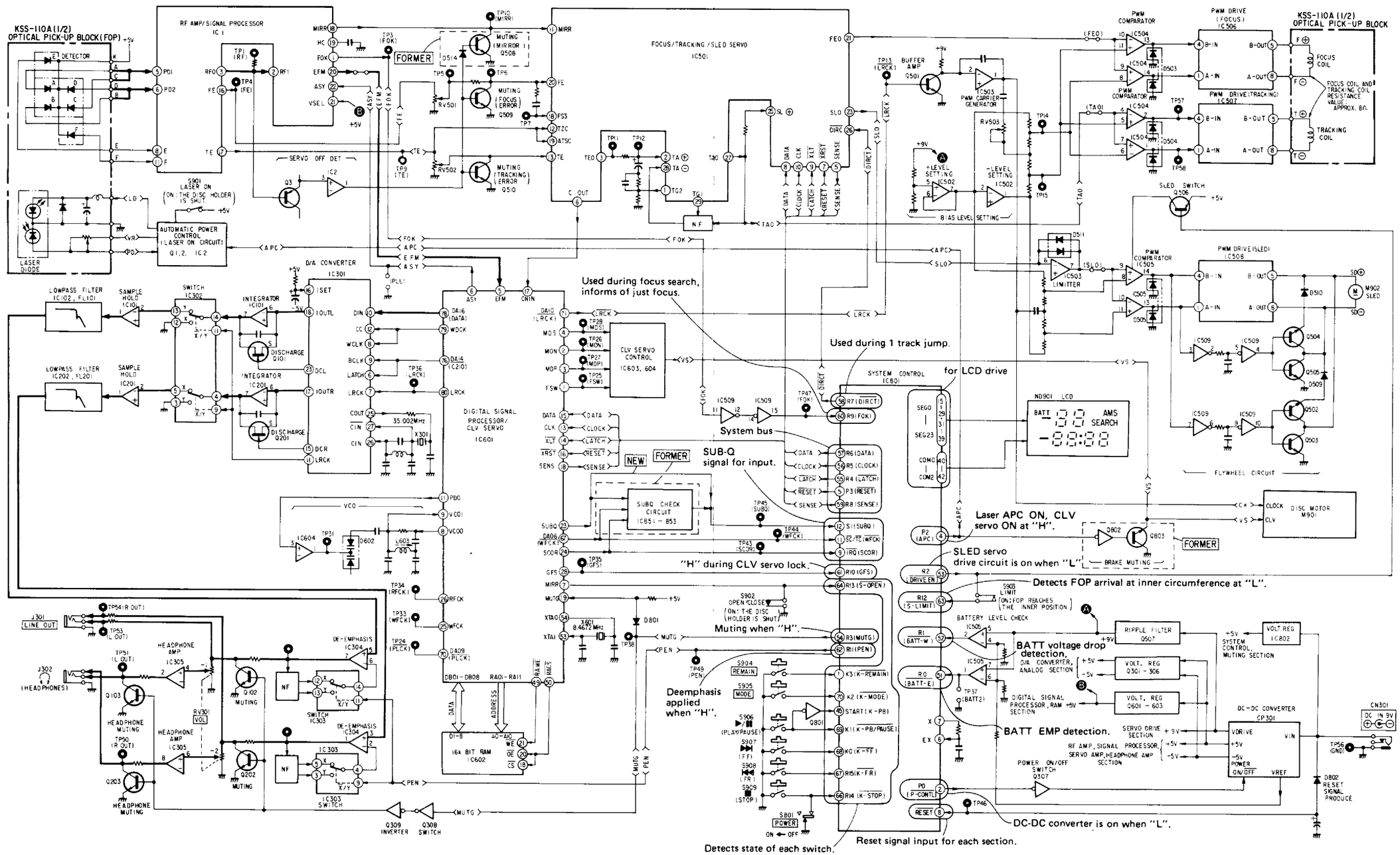

Page 1

Page 2

Courtesy of Sony Corporation

ATTACHMENT OF FLEXIBLE BOARD

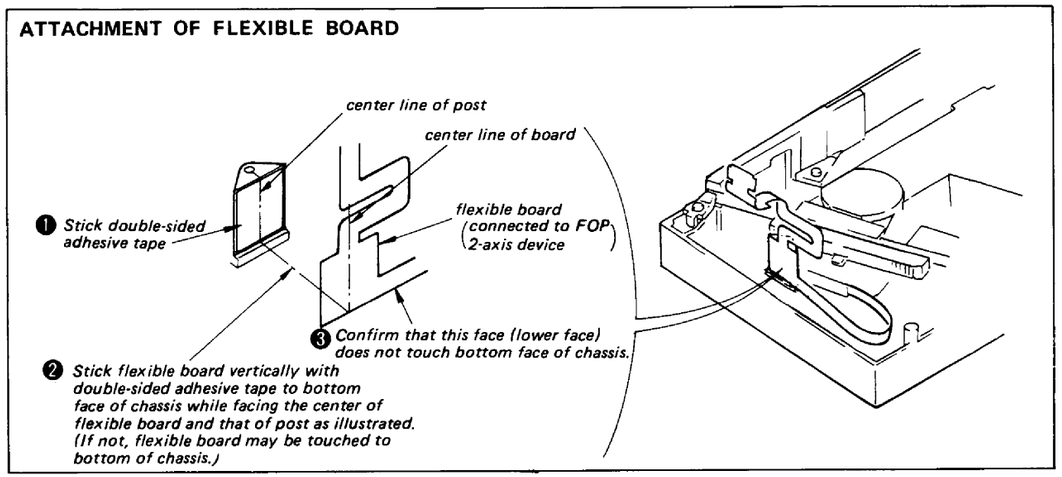

SLED MOTOR

Note: Sled motor should be installed at the position where gear C engages with the center of rack.

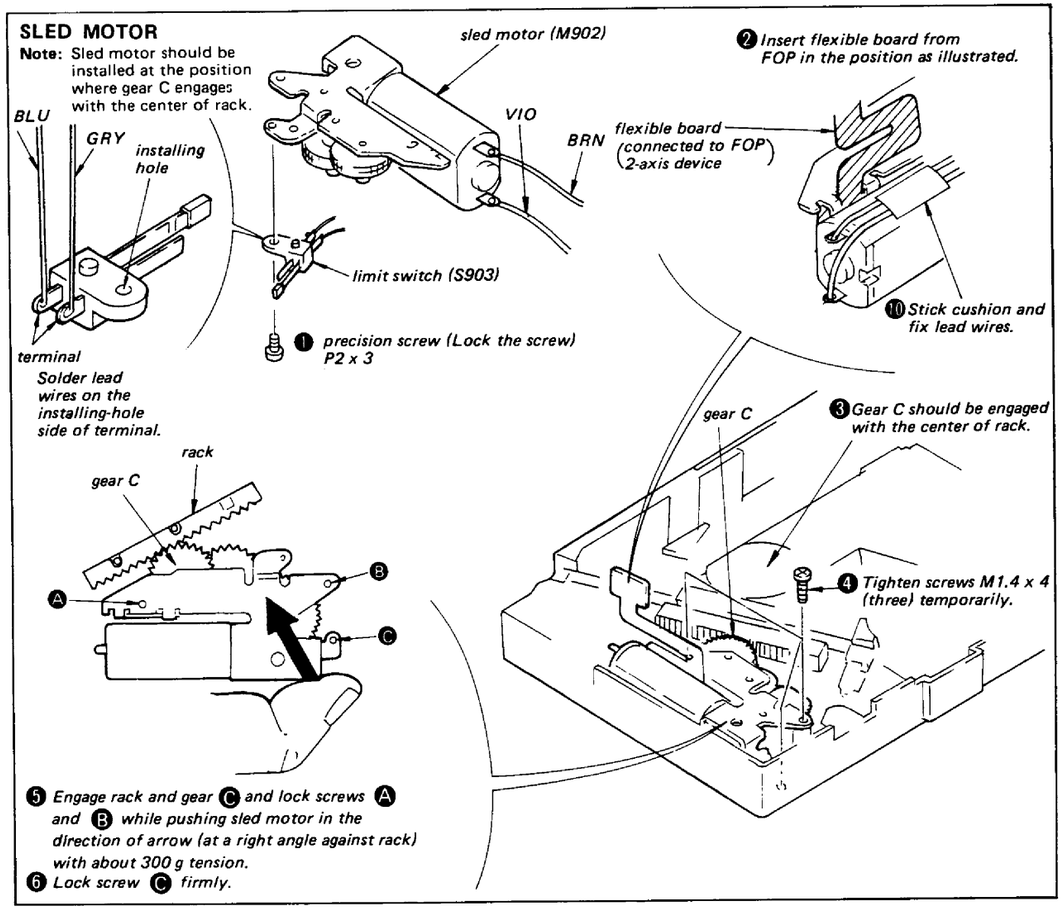

12/S Schematics

12/S - CS	Car Stereo
12/S - CS - Al	Alpine
12/S - CS - Al - 7293 (Pages 1-4)	7293

Alpine 7293 Pull-Out Car Stereo

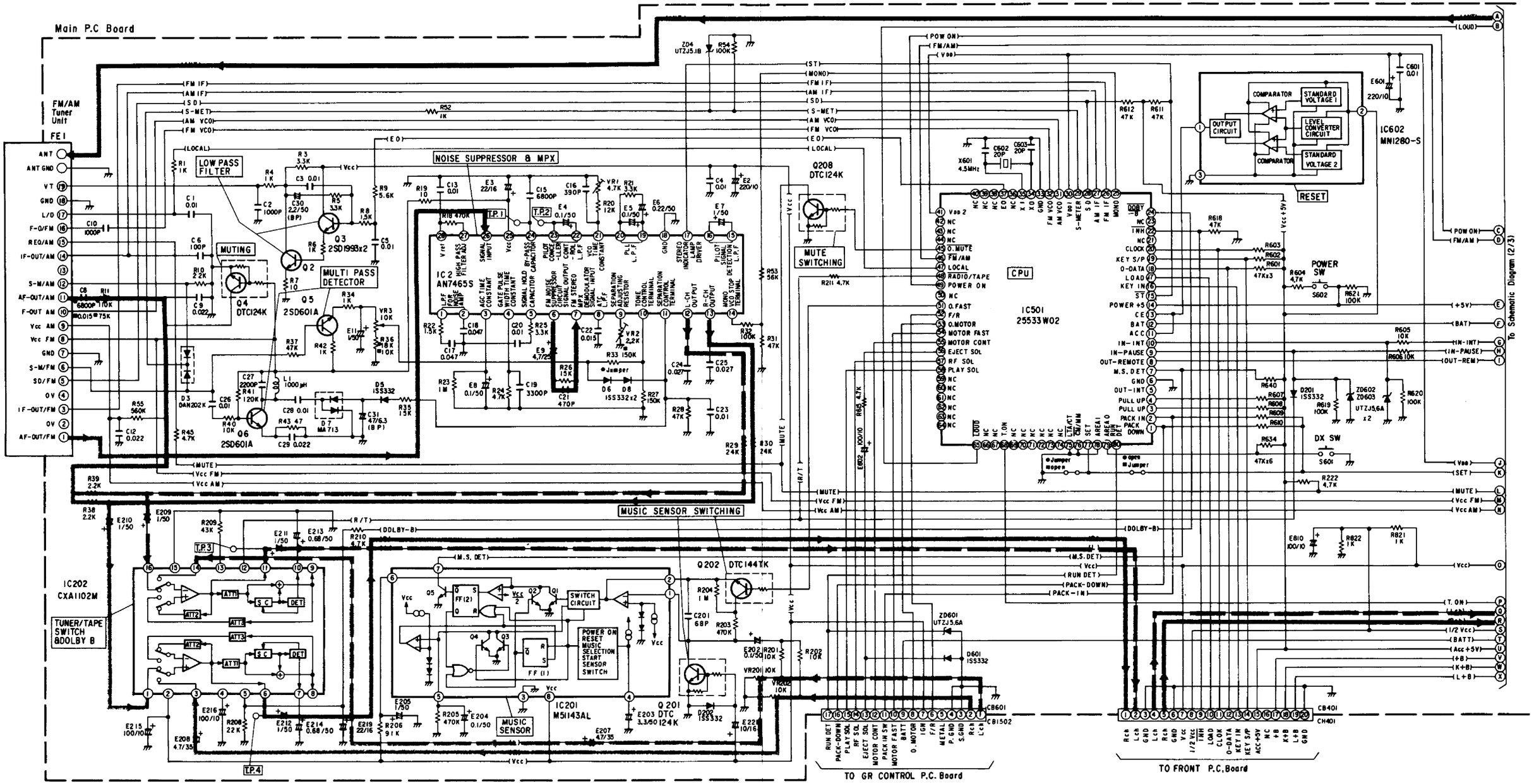

Courtesy Alpine Electronics of America, Inc.

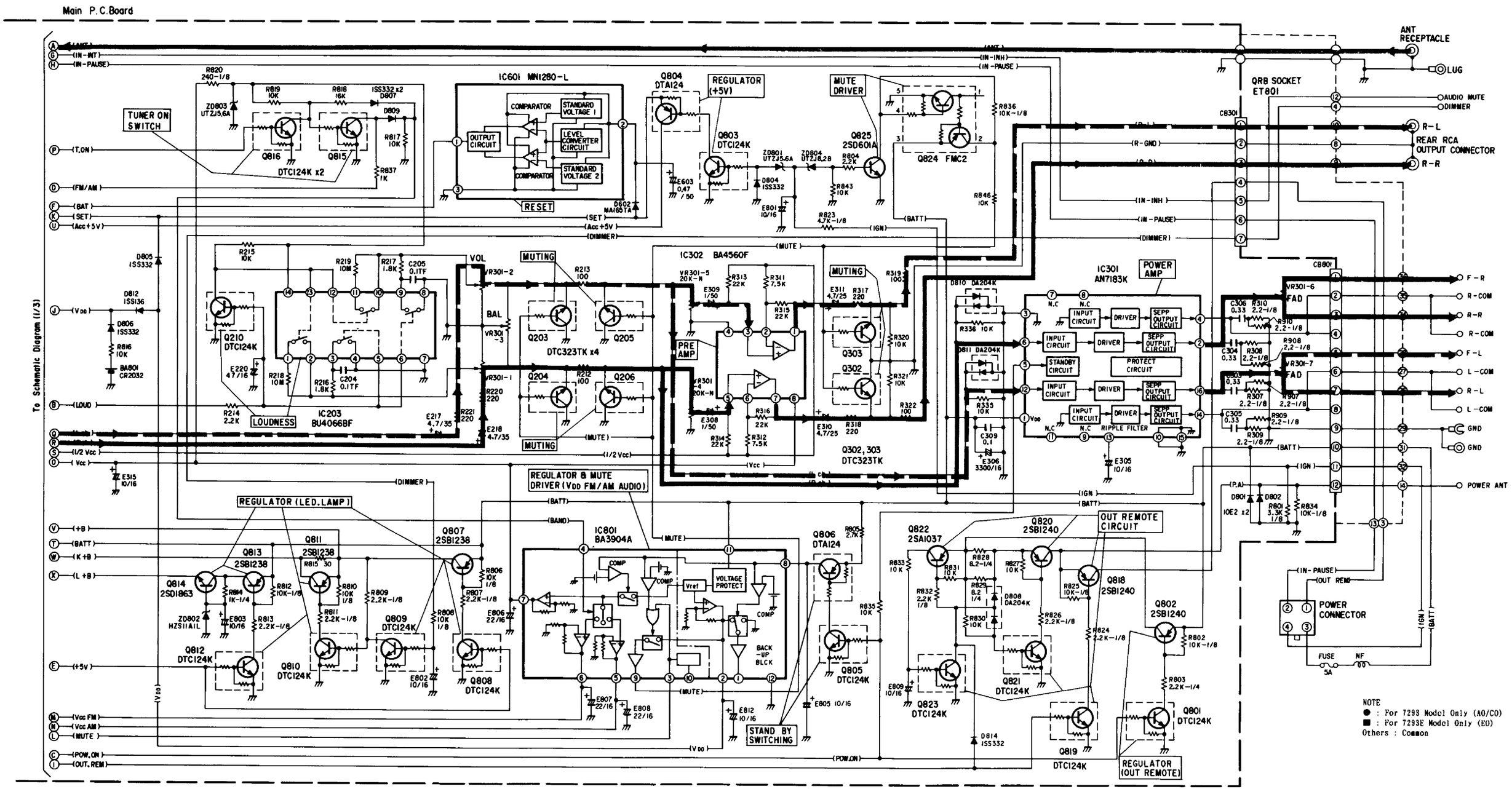
Main P.C.Board
To Schematic Diagram (1/3)
ANT RECEPTACLE
LUG
QRB SOCKET ET801
AUDIO MUTE
DIMMER
R-L
REAR RCA OUTPUT CONNECTOR
R-R
TUNER ON SWITCH
DTC124K x2
IC601 MN1280-L
COMPARATOR
STANDARD VOLTAGE 1
OUTPUT CIRCUIT
LEVEL CONVERTER CIRCUIT
STANDARD VOLTAGE 2
RESET
REGULATOR (+5V)
MUTE DRIVER
Q824 FMC2
IC302 BA4560F
MUTING
PRE AMP
DTC323TK x4
Q302, 303 DTC323TK
IC203 BU4066BF
LOUDNESS
VOL
BAL
IC301 AN7183K
POWER AMP
INPUT CIRCUIT
DRIVER
SEPP OUTPUT CIRCUIT
STANDBY CIRCUIT
PROTECT CIRCUIT
RIPPLE FILTER
F-R
R-COM
F-L
L-COM
GND
POWER ANT
REGULATOR (LED.LAMP)
REGULATOR & MUTE DRIVER (VDD FM/AM AUDIO)
IC801 BA3904A
VOLTAGE PROTECT
BACK-UP BLCK
STAND BY SWITCHING
OUT REMOTE CIRCUIT
POWER CONNECTOR
FUSE 3A
REGULATOR (OUT REMOTE)
NOTE
● : For 7293 Model Only (AO/CO)
■ : For 7293E Model Only (EO)
Others : Common

Panasonic KX - T3000 Cordless Telephone

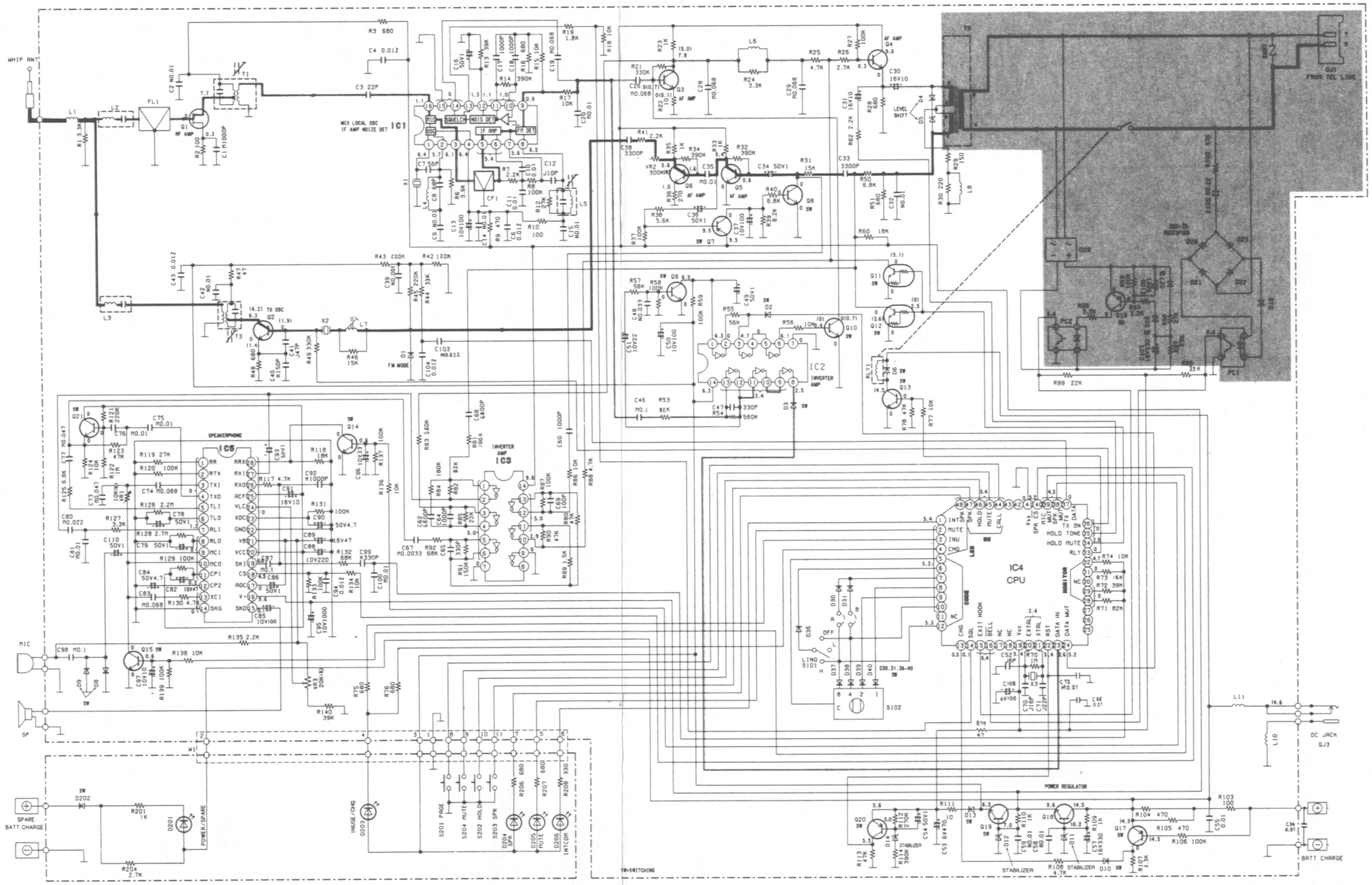

Notes:

1. S102: Code Selector Switch.
2. S201: Page/Intercom Switch.
3. S202: Hold Switch.
4. S203: Speakerphone Switch.
5. S204: Mute Switch.
6. DC voltage measurements are taken with an electronic voltmeter from the negative voltage line.
   STANDBY position ( )...TALK position

KX - T3000H schematic

Important Safety notice

The shaded area on this schematic diagram incorporates special features important for protection from fire and electrical shock hazards.
When servicing it is essential that only manufacturer's specified parts be used for the critical components in the shaded areas of the schematic.

This schematic diagram may be modified at any time with the development of new technology.

TX Signal
RX Signal
Data Signal

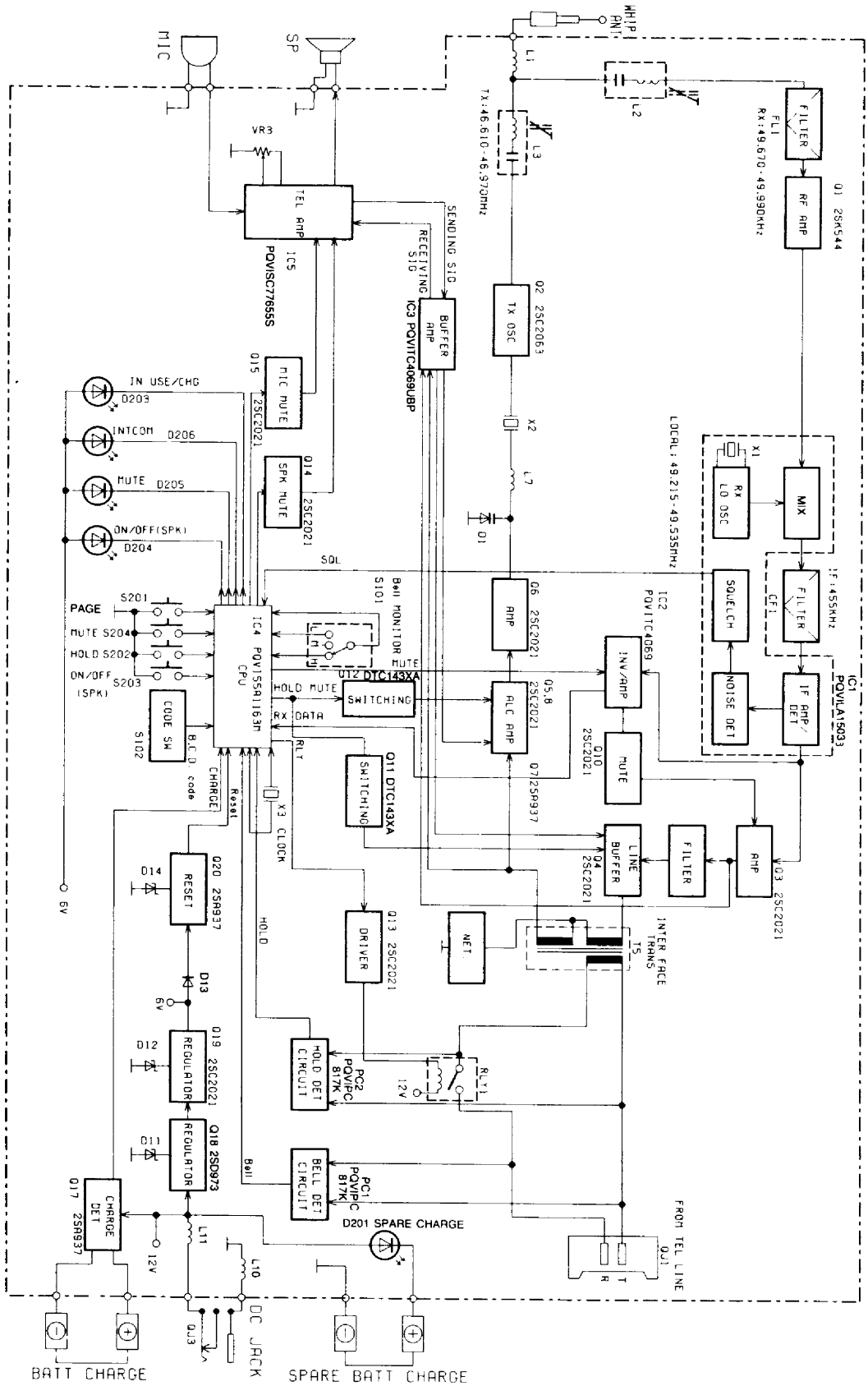

KX - T3000H block diagram

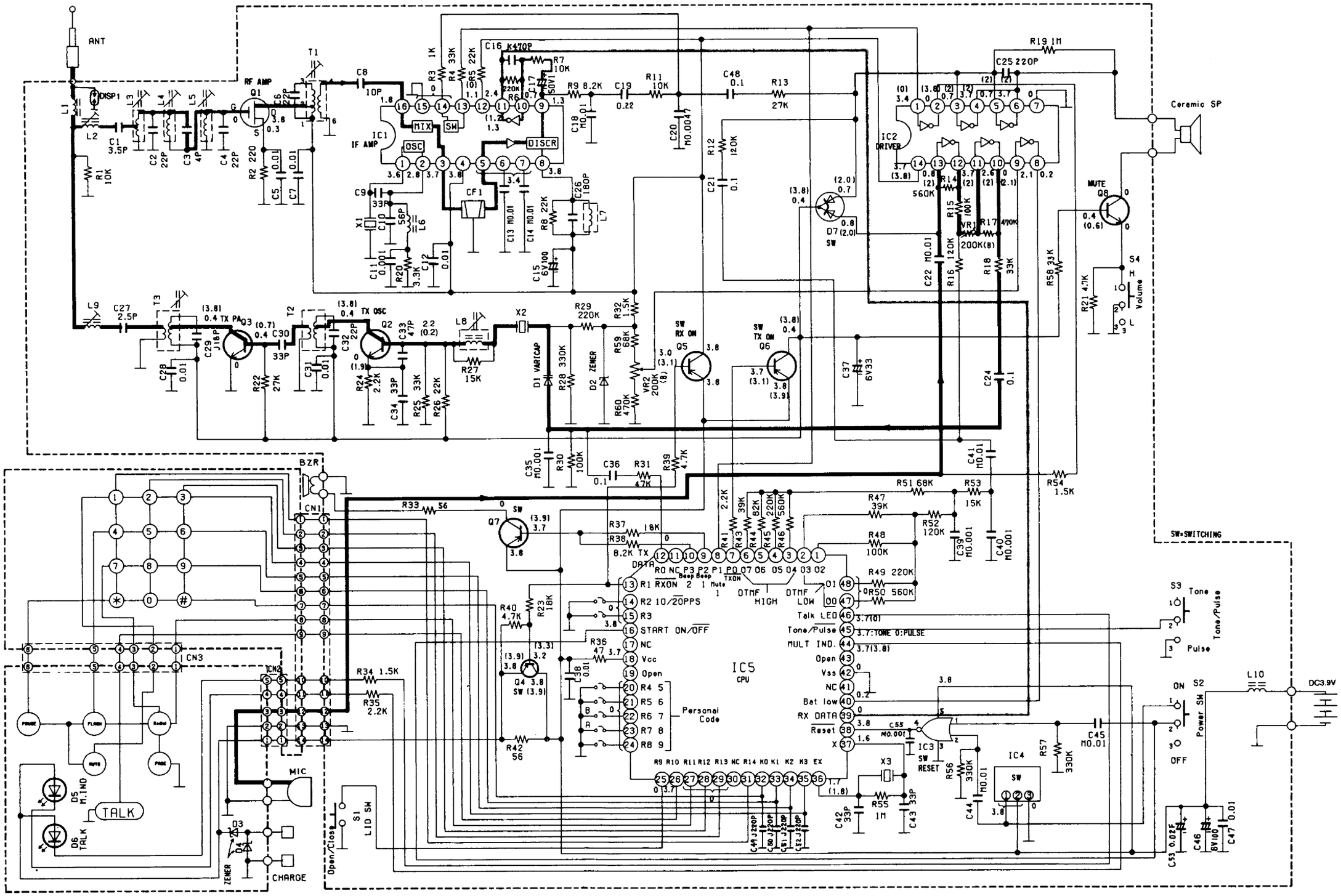

Notes:

1. S1: Lid Switch.
2. S2: Power Switch.
3. S3: Tone/Pulse Selector Switch in "TONE" position.
4. S4: Volume Selector Switch in "HIGH" position.

5. DC voltage measurements are taken with electronic voltmete. from negative voltage line.
STANDBY position ( ) ...TALK position

This schematic diagram may be modified at any time with the development of new technology.

TX Signal
RX Signal
Data Signal

KX - T3000R schematic

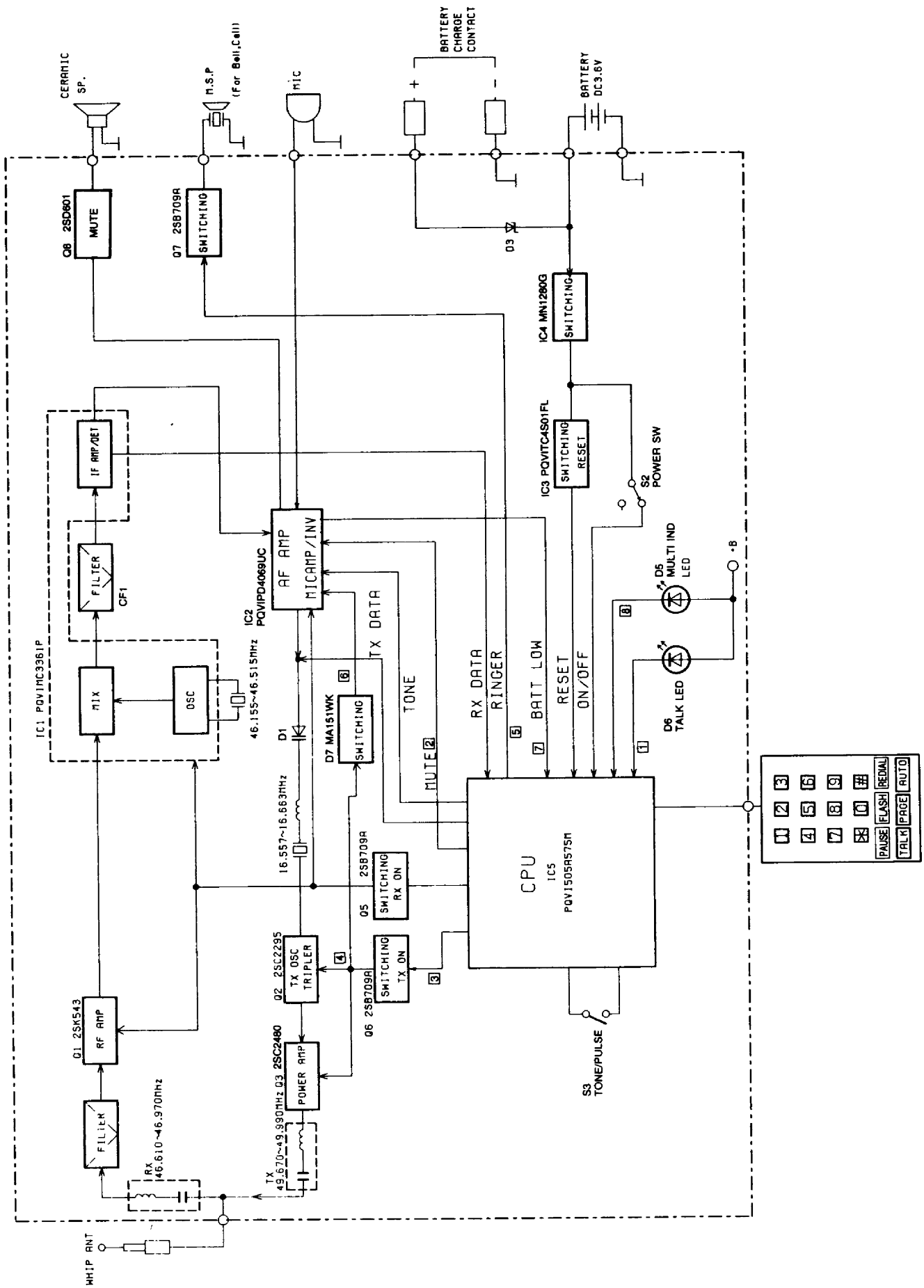

KX - T3000R block diagram

12/S Schematics

12/S - R	Radio
12/S - R - Pio	Pioneer
12/S - R - Pio - SX2300 (Pages 1-3)	SX-2300

Pioneer SX-2300 Stereo Receiver

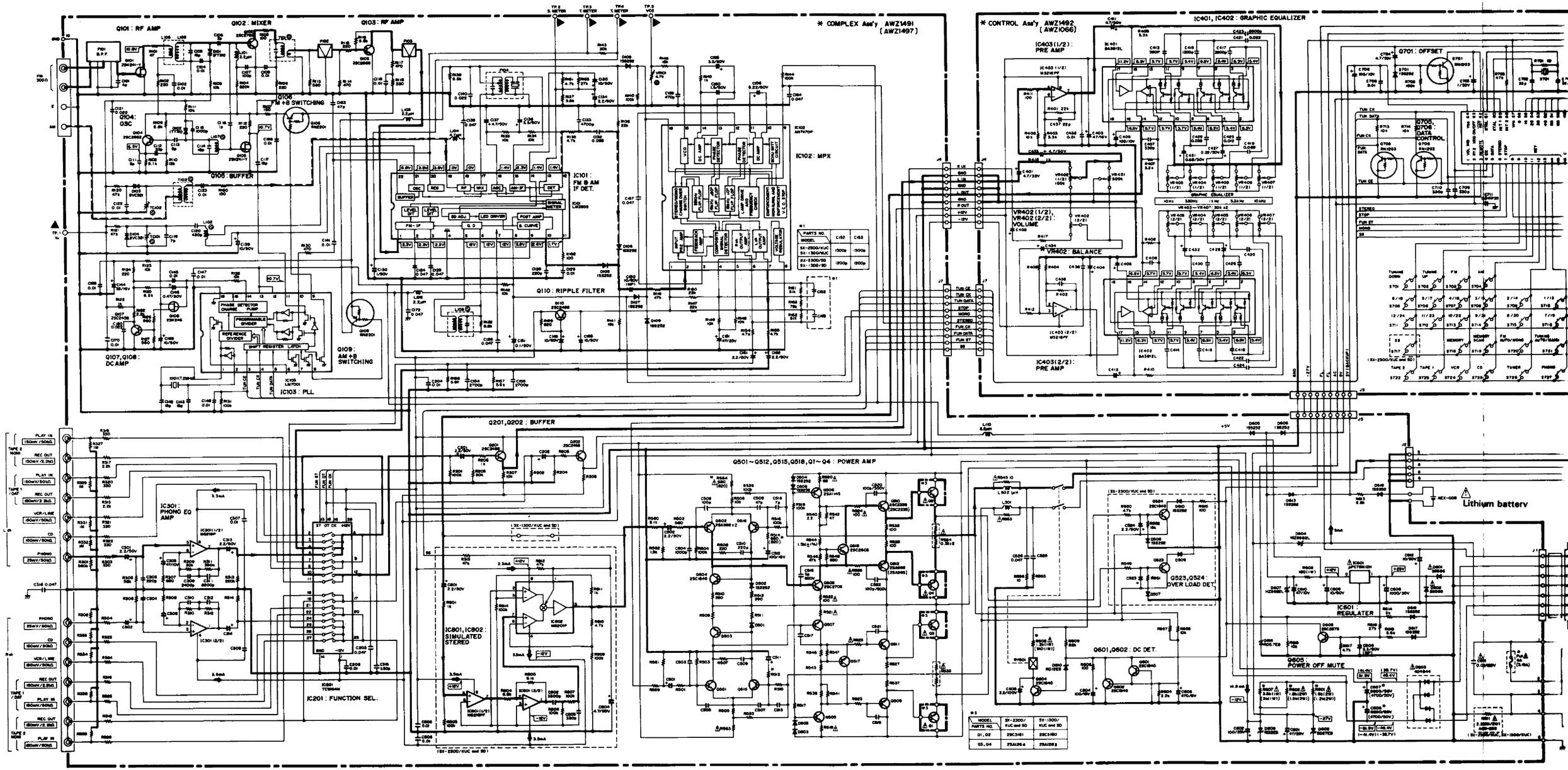

Page 1

Page 2

Pioneer SX-2300 Stereo Receiver

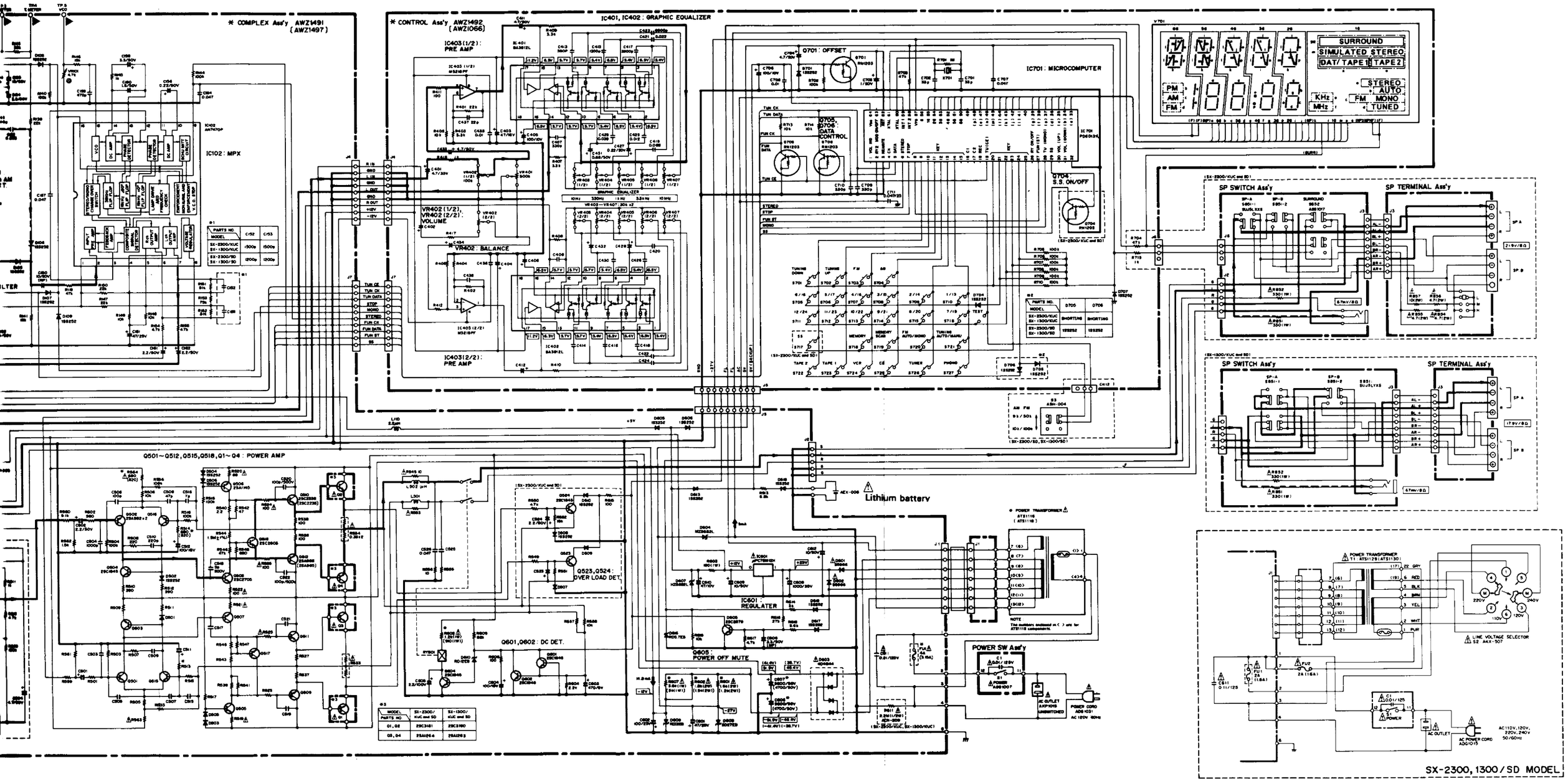

Courtesy Pioneer Electronics Corporation

12/S Schematics

12/S - VCR	Video Cassette Recorder
12/S - VCR - Pan	Panasonic
12/S - VCR - Pan - PV-S4764 (Page 1)	PV-S4764

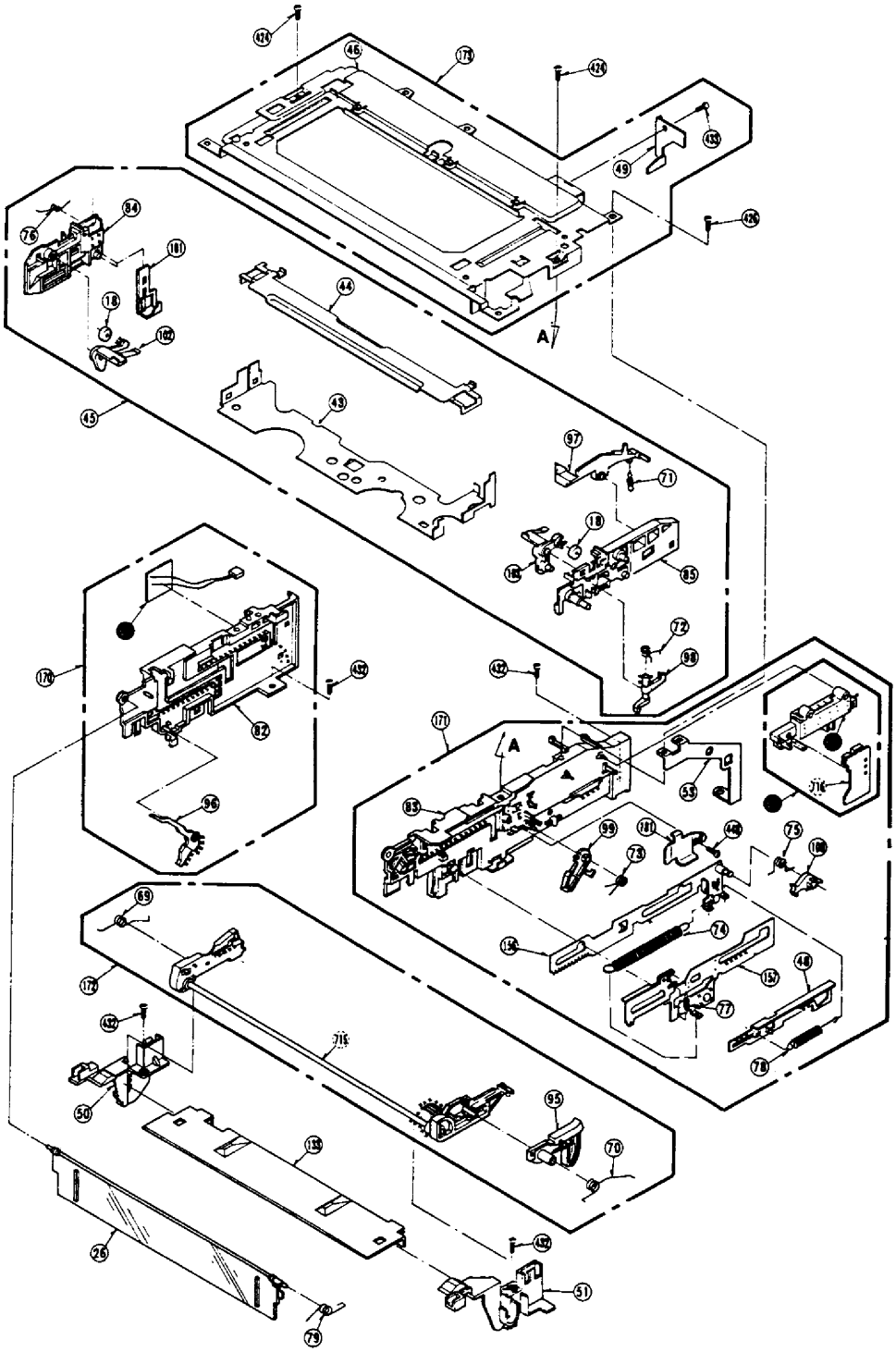

Courtesy Panasonic Corporation

12/S Schematics

12/S - CS	Car Stereo
12/S - CS - Al	Alpine
12/S - CS - Al - 7293 (Continued, pages 5-6)	7293

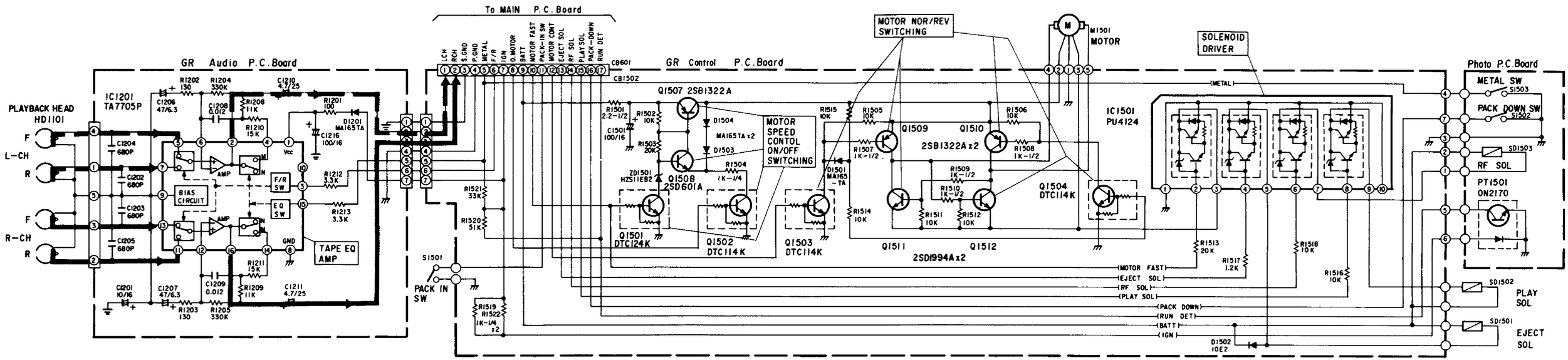

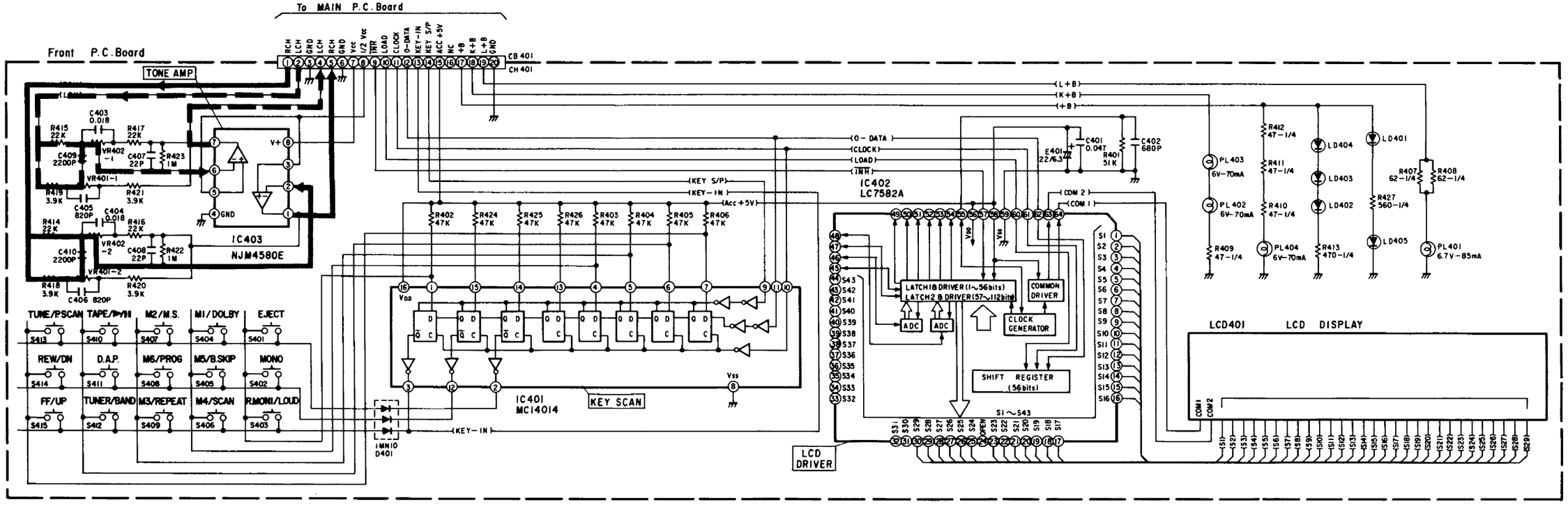

12/S Schematics

12/S - Tel	Telephones
12/S - Tel - Pan	Panasonic
12/S - Tel - Pan - KX-T1423/KX-T2325 (Pages 1-4)	KX-T1423/KX-T2325

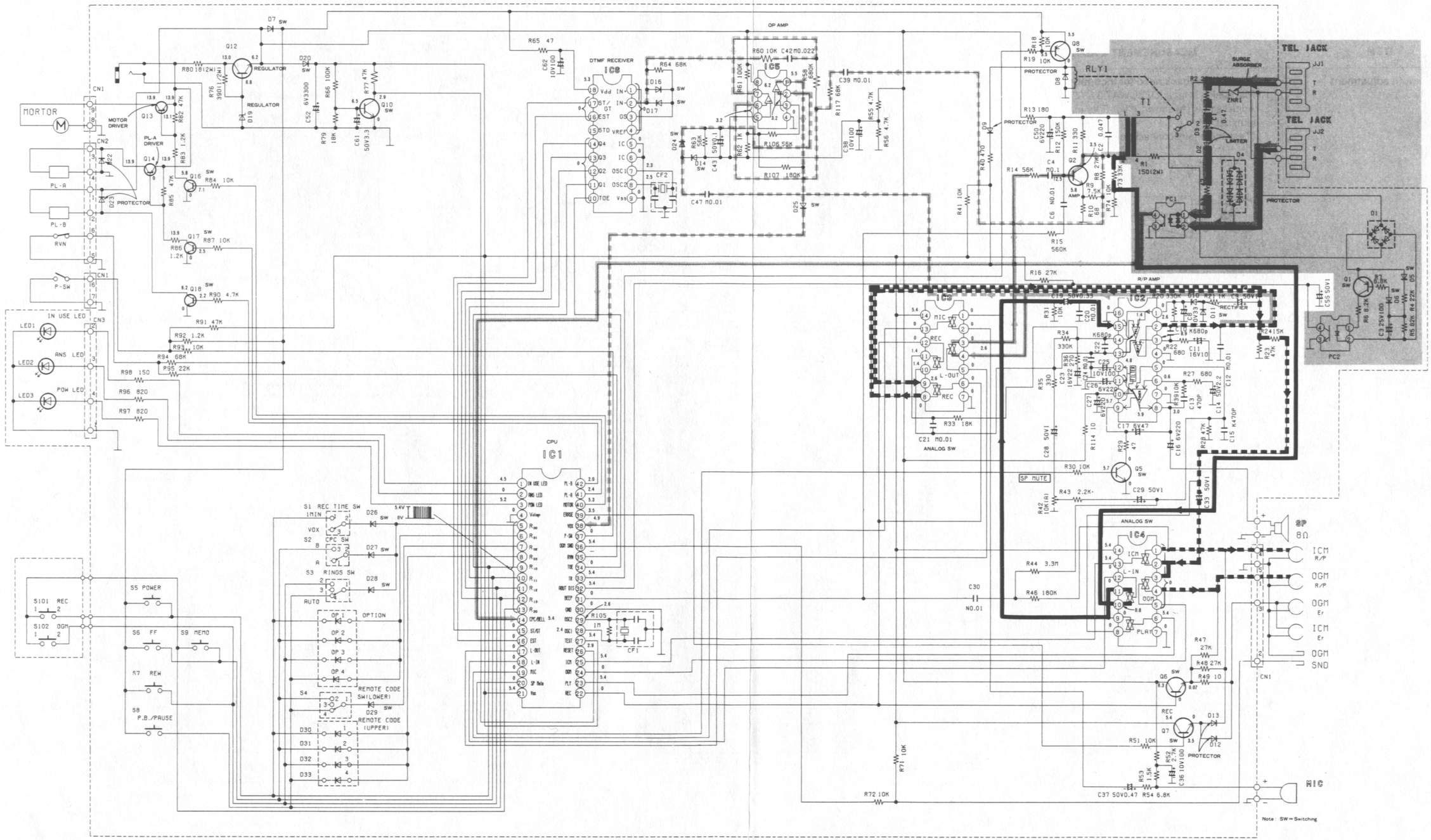

KX-T1423 schematic diagram

Page 1

Page 2

KX-T2325 Answering Machine

IC1	IC2	IC3	Q1	Q2	Q3,5	Q4,10,12,20,23	Q17,22	Q7	Q11,13	Q6,14	Q19,21
PQVIIR3N34A	MN158342KTA1	PQVIMB3761M	2SA1400	2SD662	2SA937	2SC2021	2SC2021	2SC2120	DTA144A	DTC144A	2SD1302
TONE RINGER	CPU	COMPARATER	SWITCHING	SWITCHING	SWITCHING	SWITCHING	AF AMP	AF AMP	SWITCHING	SWITCHING	SWITCHING

D1	PQVD1G1B42 RECTIFIER
D2~5	1SS131 RECTIFIER
D6	MA4300 PROTECTOR
D7	MA2180 PROTECTOR
D12,14~22, 32,42	1SS131 SWITCHING
D13	MA2051 REGURATOR
D24~28	1SS131 SWITCHING
D30	MA161 SWITCHING
D39	MA4068 PROTECTOR
D40,41	1SS131 LIMITER
D44	LN28RPL LED

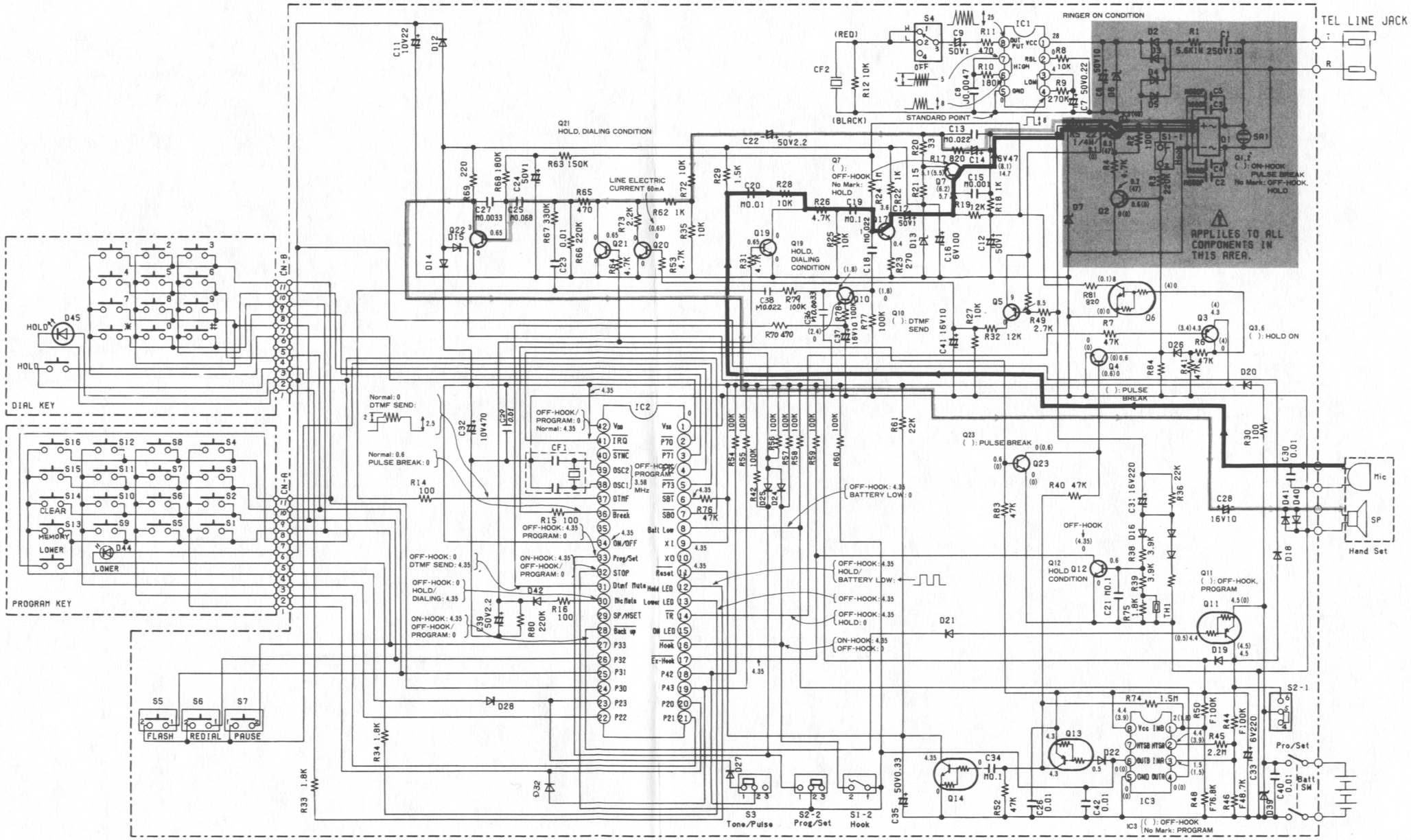

KX-T2325 schematic diagram

RCA CTC140 TV

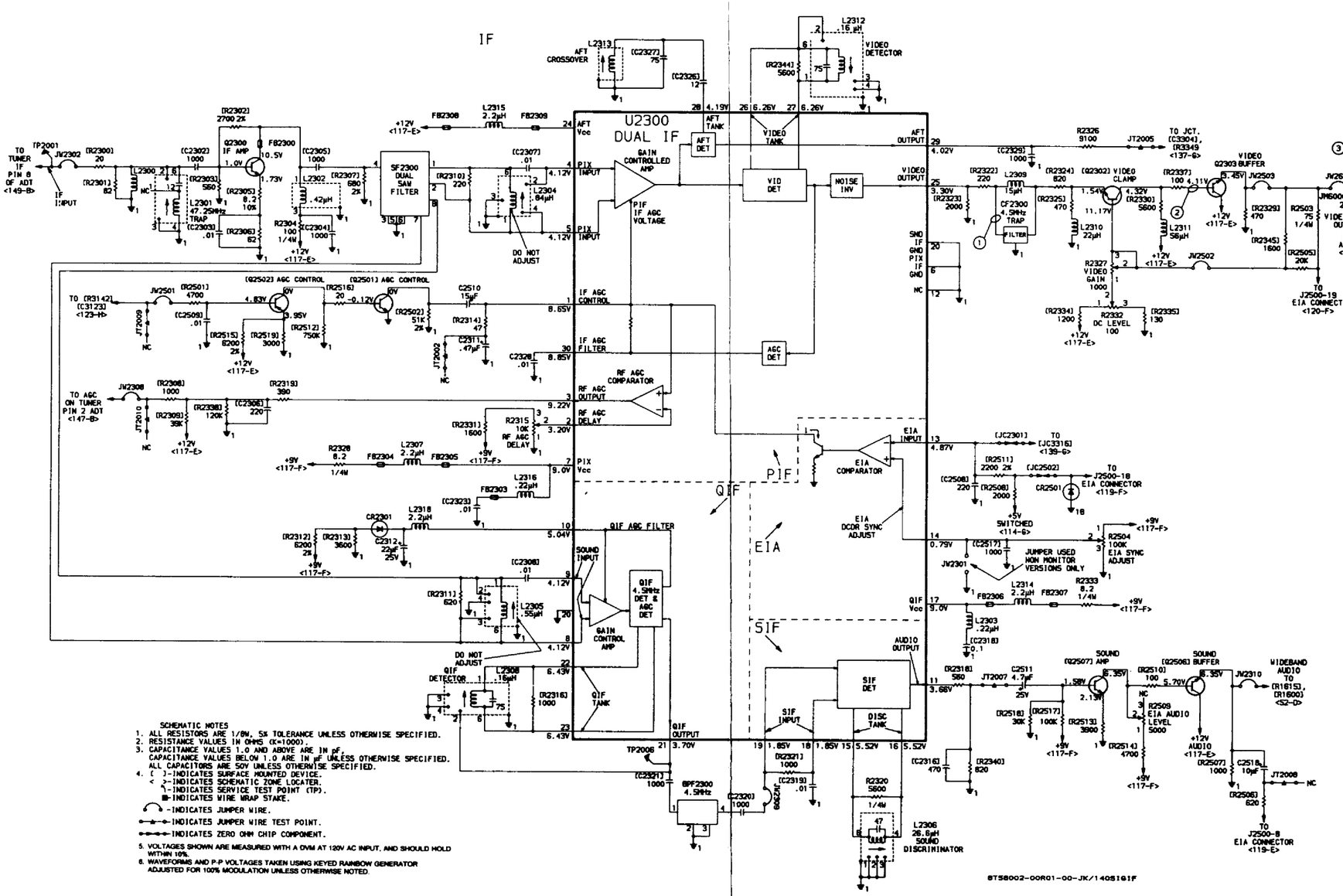

SCHEMATIC NOTES

1. ALL RESISTORS ARE 1/8W, 5% TOLERANCE UNLESS OTHERWISE SPECIFIED.
2. RESISTANCE VALUES IN OHMS (K=1000).
3. CAPACITANCE VALUES 1.0 AND ABOVE ARE IN pF.
   CAPACITANCE VALUES BELOW 1.0 ARE IN µF UNLESS OTHERWISE SPECIFIED.
   ALL CAPACITORS ARE 50V UNLESS OTHERWISE SPECIFIED.
4. [ ]-INDICATES SURFACE MOUNTED DEVICE.
   < >-INDICATES SCHEMATIC ZONE LOCATER.
   -INDICATES SERVICE TEST POINT (TP).
   -INDICATES WIRE WRAP STAKE.
   -INDICATES JUMPER WIRE.
   -INDICATES JUMPER WIRE TEST POINT.
   -INDICATES ZERO OHM CHIP COMPONENT.
5. VOLTAGES SHOWN ARE MEASURED WITH A DVM AT 120V AC INPUT, AND SHOULD HOLD WITHIN 10%.
6. WAVEFORMS AND P-P VOLTAGES TAKEN USING KEYED RAINBOW GENERATOR ADJUSTED FOR 100% MODULATION UNLESS OTHERWISE NOTED.

CTC140 video/sound IF-comb filter schematic

RCA CTC140 TV

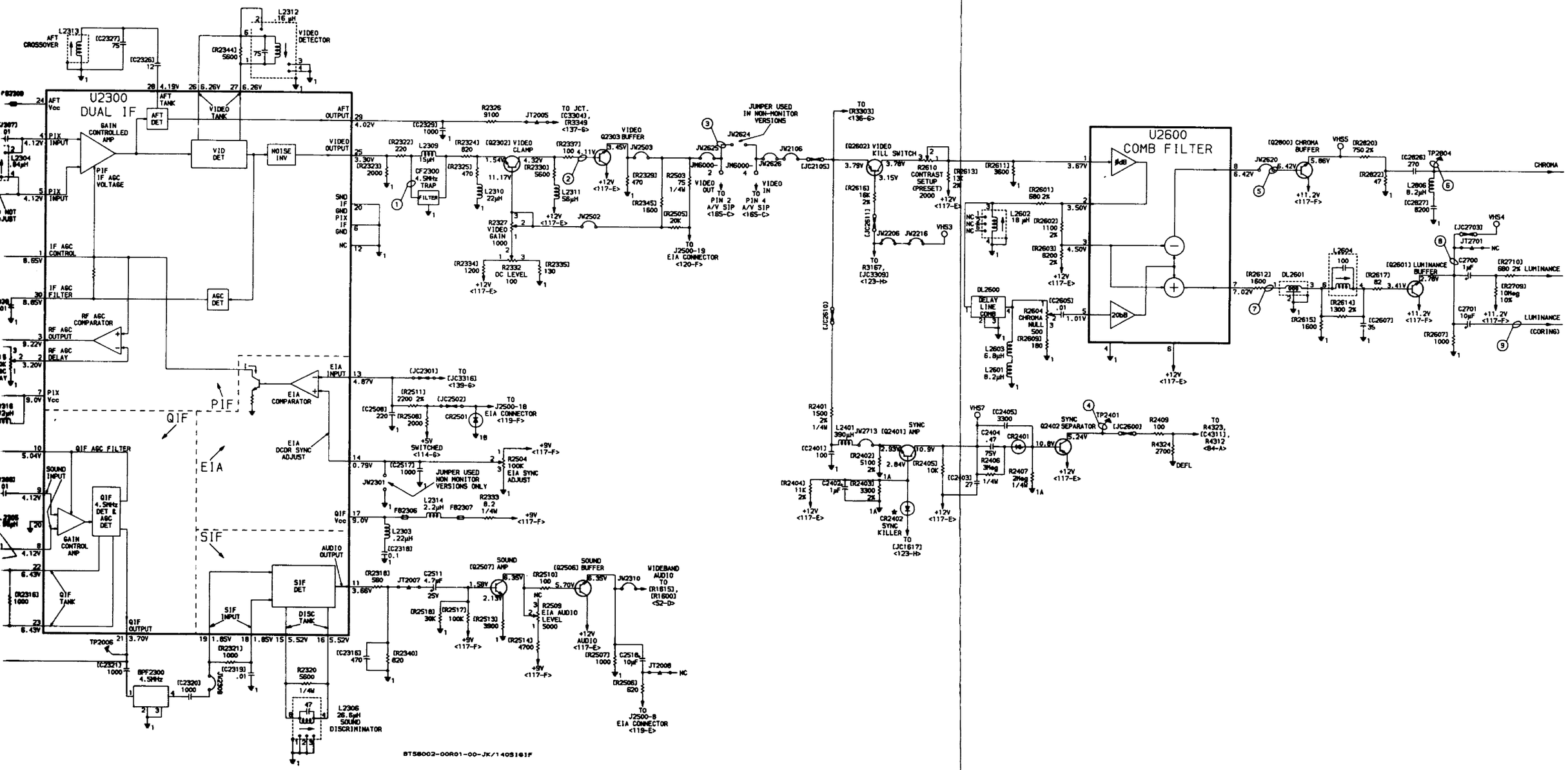

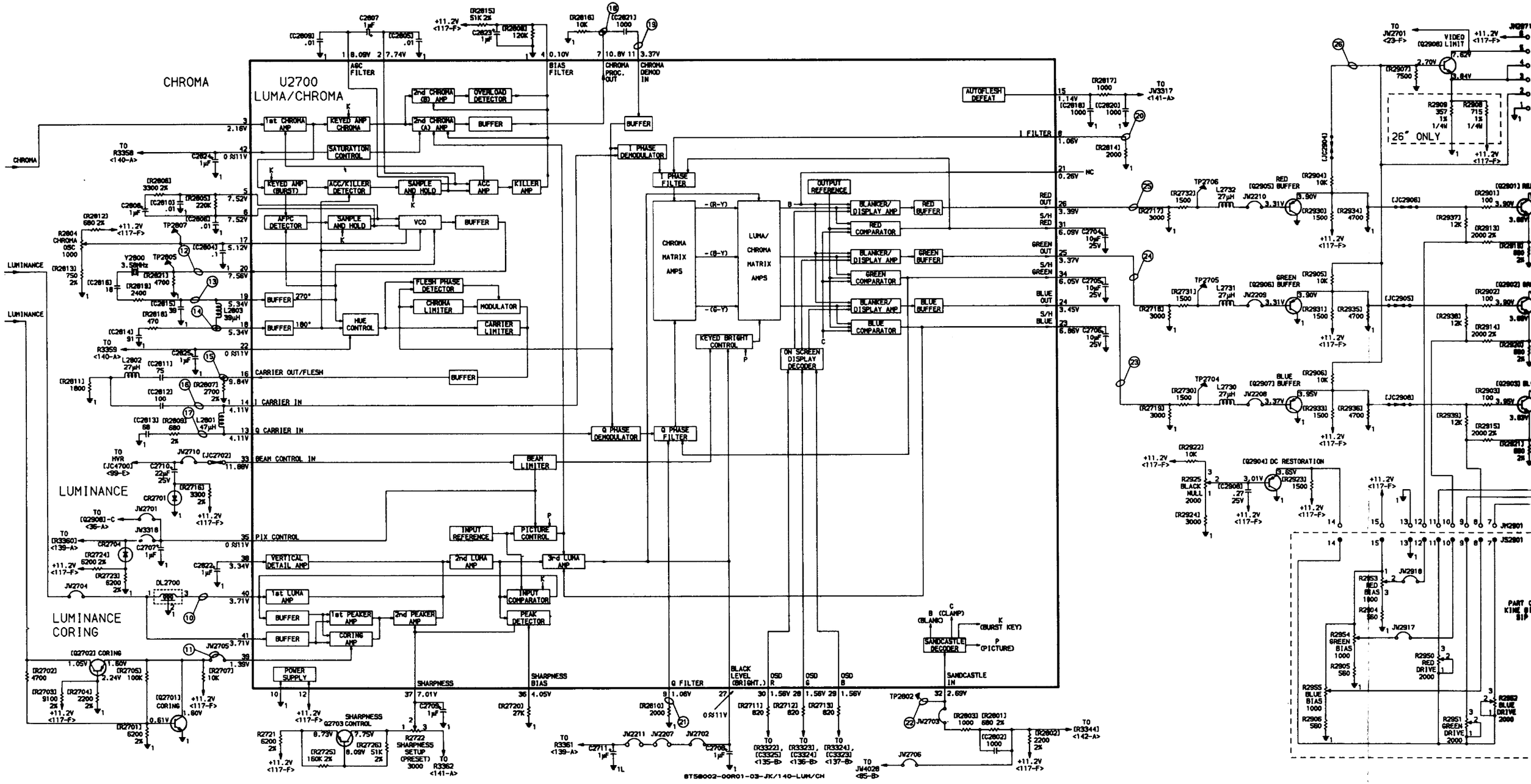

CTC140 luminance/chroma processing schematic

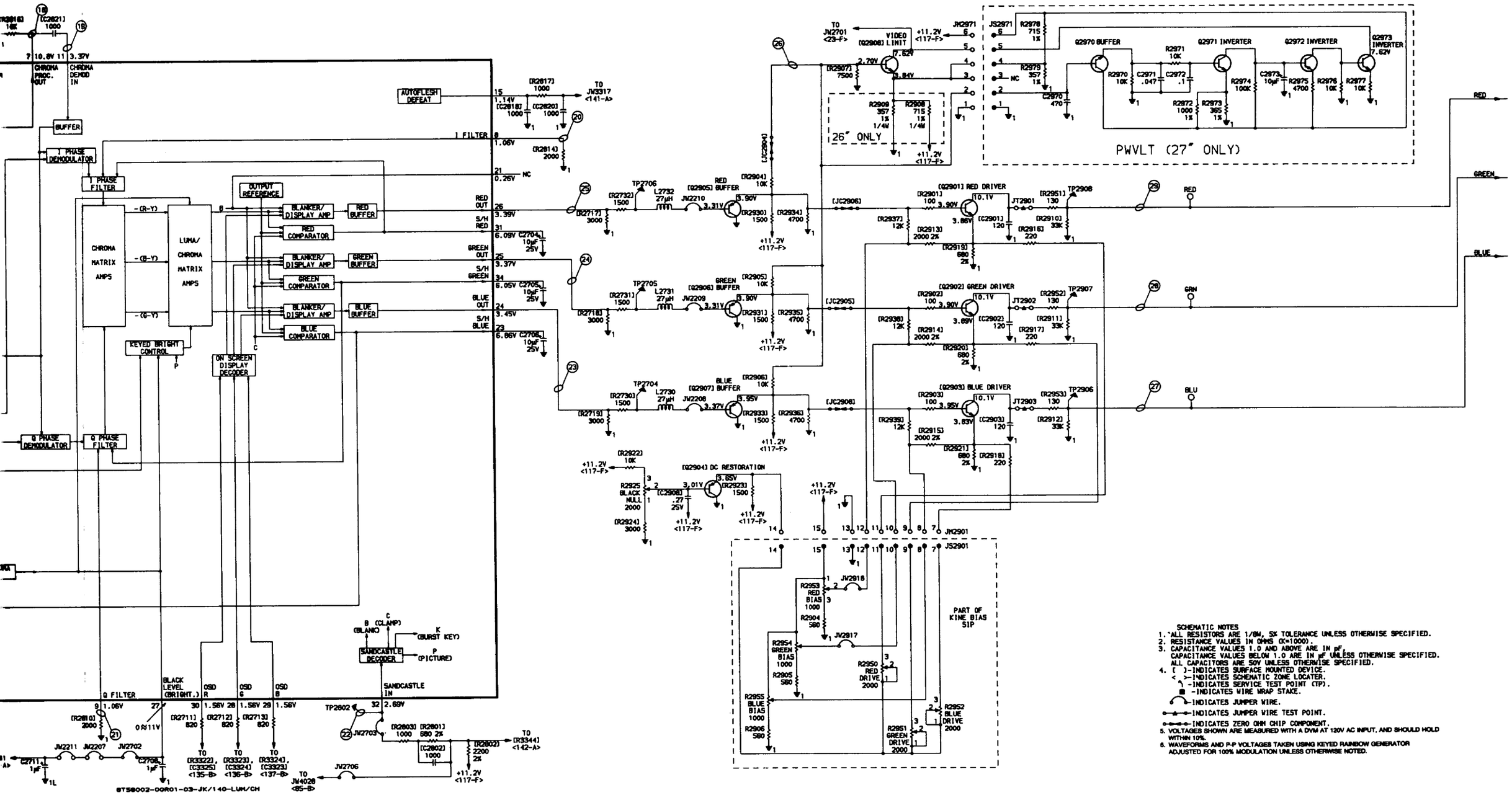

SCHEMATIC NOTES

1. ALL RESISTORS ARE 1/8W, 5% TOLERANCE UNLESS OTHERWISE SPECIFIED.
2. RESISTANCE VALUES IN OHMS (K=1000).
3. CAPACITANCE VALUES 1.0 AND ABOVE ARE IN pF. CAPACITANCE VALUES BELOW 1.0 ARE IN µF UNLESS OTHERWISE SPECIFIED. ALL CAPACITORS ARE 50V UNLESS OTHERWISE SPECIFIED.
4. [ ]-INDICATES SURFACE MOUNTED DEVICE.
   < >-INDICATES SCHEMATIC ZONE LOCATER.
   -INDICATES SERVICE TEST POINT (TP).
   -INDICATES WIRE WRAP STAKE.
   -INDICATES JUMPER WIRE.
   -INDICATES JUMPER WIRE TEST POINT.
   -INDICATES ZERO OHM CHIP COMPONENT.
5. VOLTAGES SHOWN ARE MEASURED WITH A DVM AT 120V AC INPUT, AND SHOULD HOLD WITHIN 10%.
6. WAVEFORMS AND P-P VOLTAGES TAKEN USING KEYED RAINBOW GENERATOR ADJUSTED FOR 100% MODULATION UNLESS OTHERWISE NOTED.

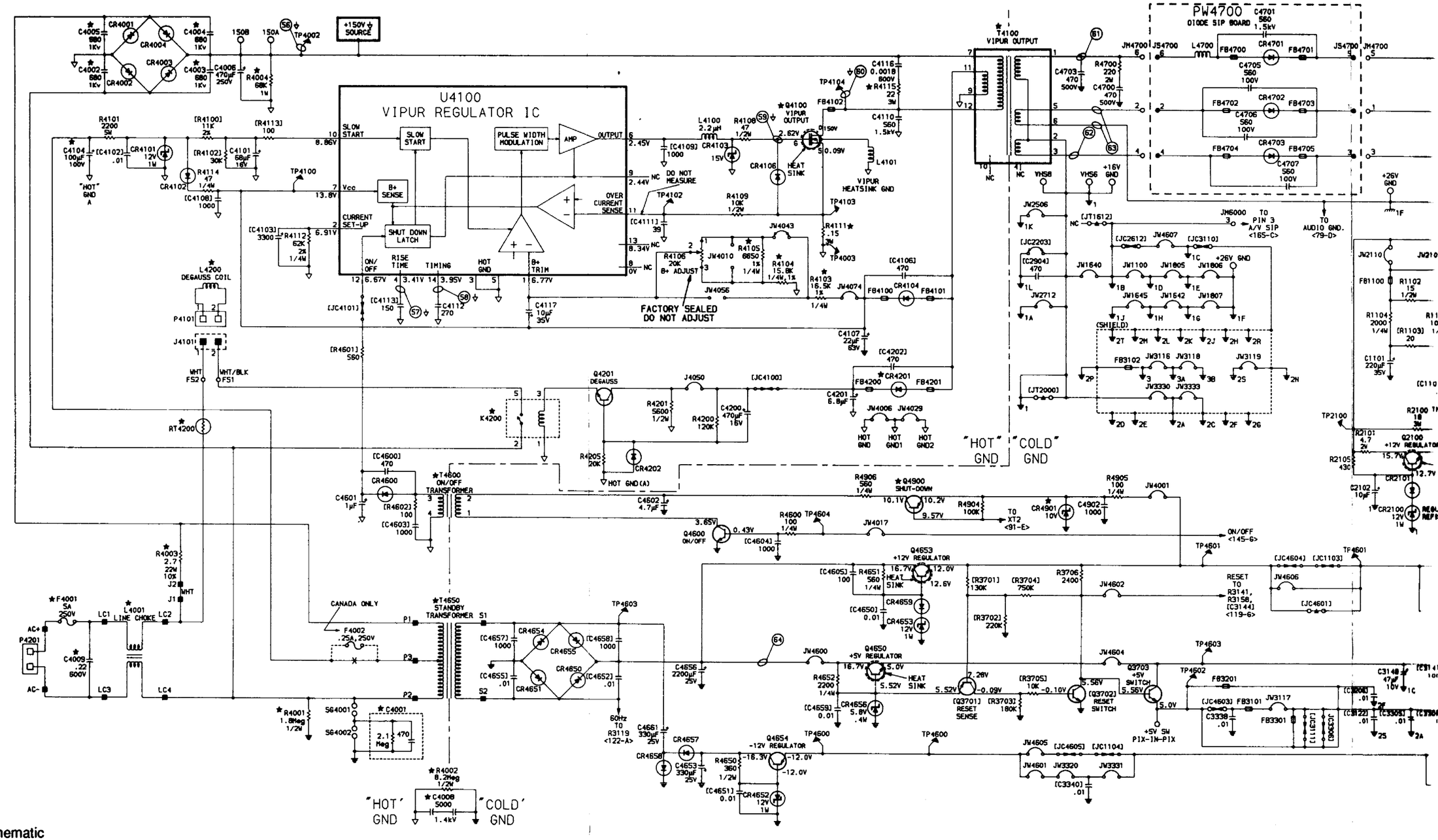

CTC140 power supply schematic

RCA CTC140 TV

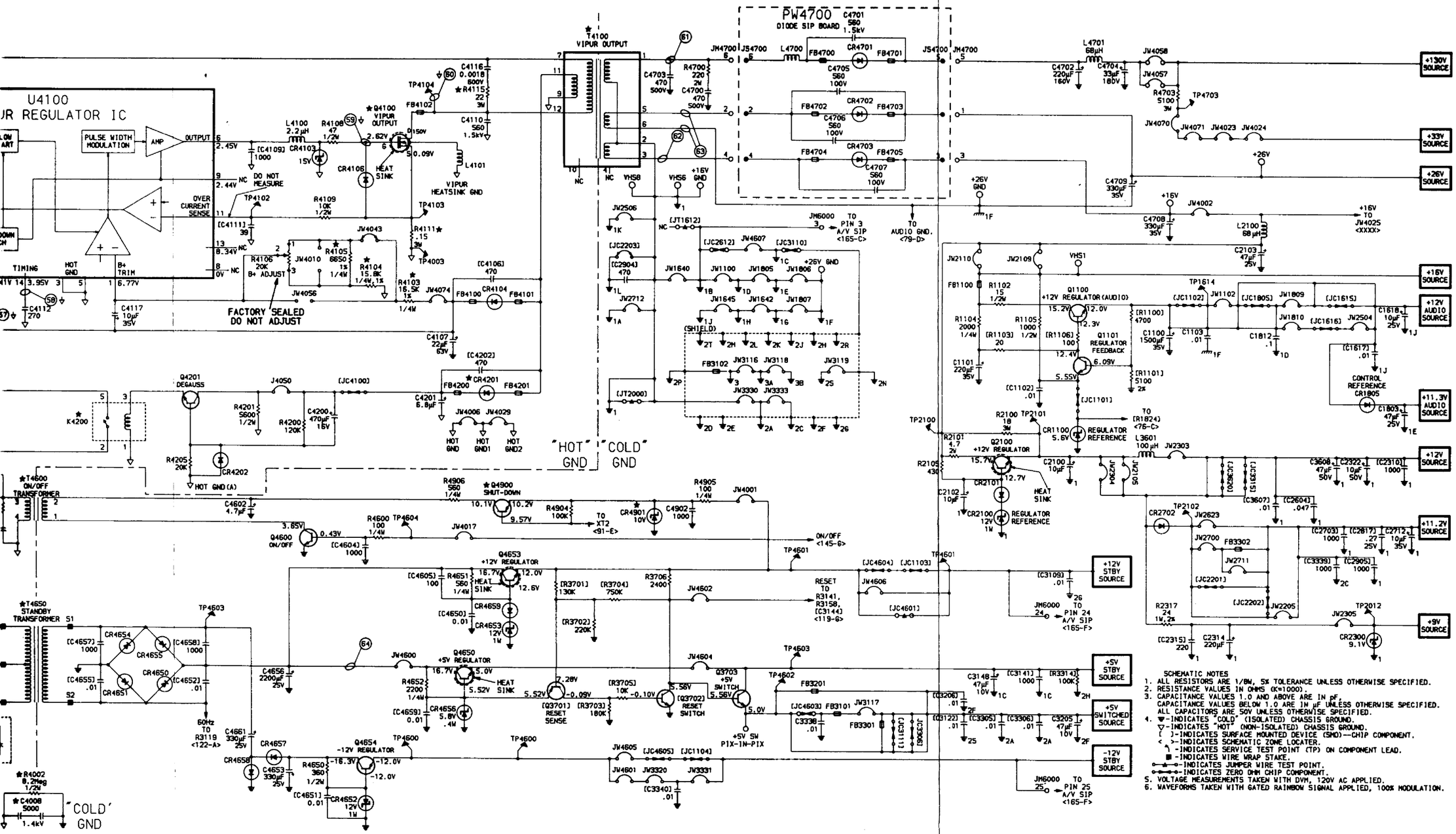

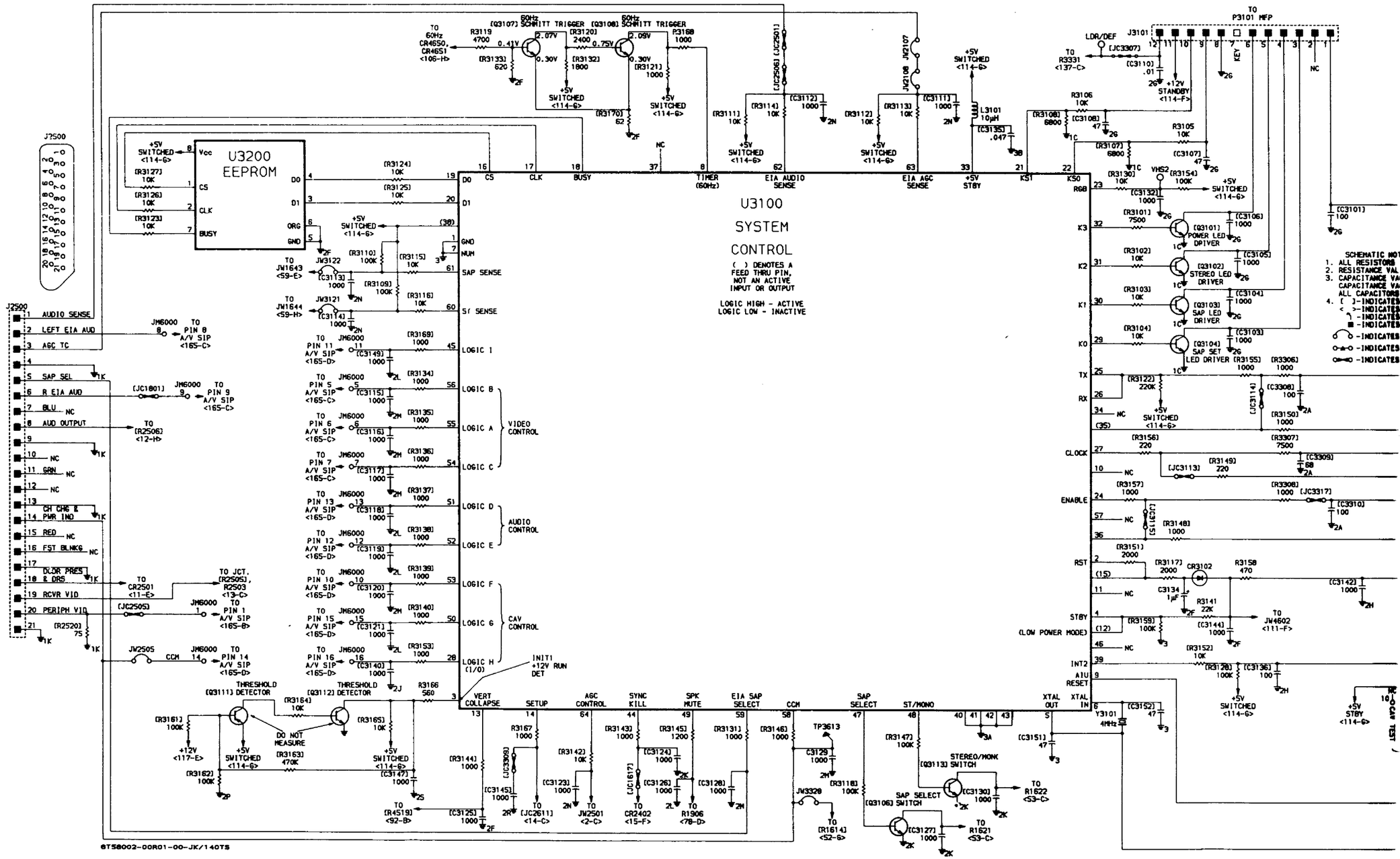

CTC140 system control schematic

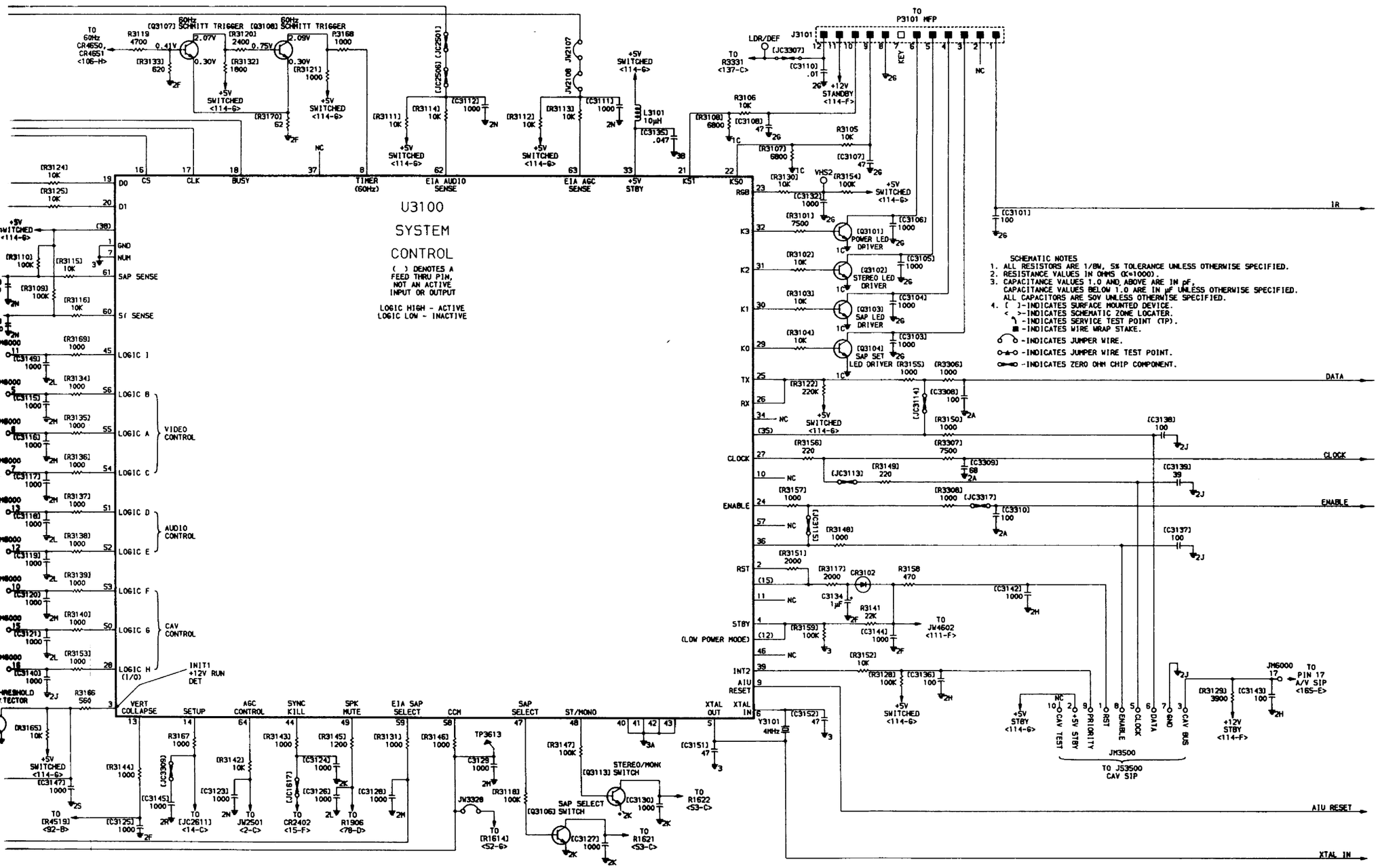
U3100
SYSTEM
CONTROL
( ) DENOTES A FEED THRU PIN, NOT AN ACTIVE INPUT OR OUTPUT
LOGIC HIGH - ACTIVE
LOGIC LOW - INACTIVE
SCHEMATIC NOTES
1. ALL RESISTORS ARE 1/8W, 5% TOLERANCE UNLESS OTHERWISE SPECIFIED.
2. RESISTANCE VALUES IN OHMS (K=1000).
3. CAPACITANCE VALUES 1.0 AND ABOVE ARE IN pF, CAPACITANCE VALUES BELOW 1.0 ARE IN µF UNLESS OTHERWISE SPECIFIED. ALL CAPACITORS ARE 50V UNLESS OTHERWISE SPECIFIED.
4. [ ]-INDICATES SURFACE MOUNTED DEVICE.
< >-INDICATES SCHEMATIC ZONE LOCATER.
-INDICATES SERVICE TEST POINT (TP).
-INDICATES WIRE WRAP STAKE.
-INDICATES JUMPER WIRE.
-INDICATES JUMPER WIRE TEST POINT.
-INDICATES ZERO OHM CHIP COMPONENT.
TO P3101 MFP
TO 60Hz CR4650, CR4651 <106-H>
60Hz SCHMITT TRIGGER [Q3107]
60Hz SCHMITT TRIGGER [Q3108]
+5V SWITCHED <114-6>
+12V STANDBY <114-F>
LDR/DEF
TO R3331 <137-C>
KEY
NC
IR
DATA
CLOCK
ENABLE
AIU RESET
XTAL IN
D0
D1
CS
CLK
BUSY
TIMER (60Hz)
EIA AUDIO SENSE
EIA AGC SENSE
+5V STBY
KS1
KS0
RGB
K3
K2
K1
K0
TX
RX
RST
STBY
(LOW POWER MODE)
INT2
AIU RESET
XTAL IN
XTAL OUT
GND
NUM
SAP SENSE
S/ SENSE
LOGIC I
LOGIC B
LOGIC A
LOGIC C
VIDEO CONTROL
LOGIC D
LOGIC E
AUDIO CONTROL
LOGIC F
LOGIC G
CAV CONTROL
LOGIC H (I/O)
INITI +12V RUN DET
VERT COLLAPSE
SETUP
AGC CONTROL
SYNC KILL
SPK MUTE
EIA SAP SELECT
CCM
SAP SELECT
ST/MONO
POWER LED DRIVER
STEREO LED DRIVER
SAP LED DRIVER
SAP SET LED DRIVER
STEREO/MONO SWITCH
SAP SELECT SWITCH
TO PIN 17 A/V SIP <165-E>
TO JS3500 CAV SIP
JM3500
CAV TEST
+5V STBY
PRIORITY
RST
ENABLE
CLOCK
DATA
GND
CAV BUS

12/S Schematics

12/S - VCR	VCR
12/S - VCR - Hi	Hitachi
12/S - VCR - HiVT-34A (Pages 1-4)	VT-34A

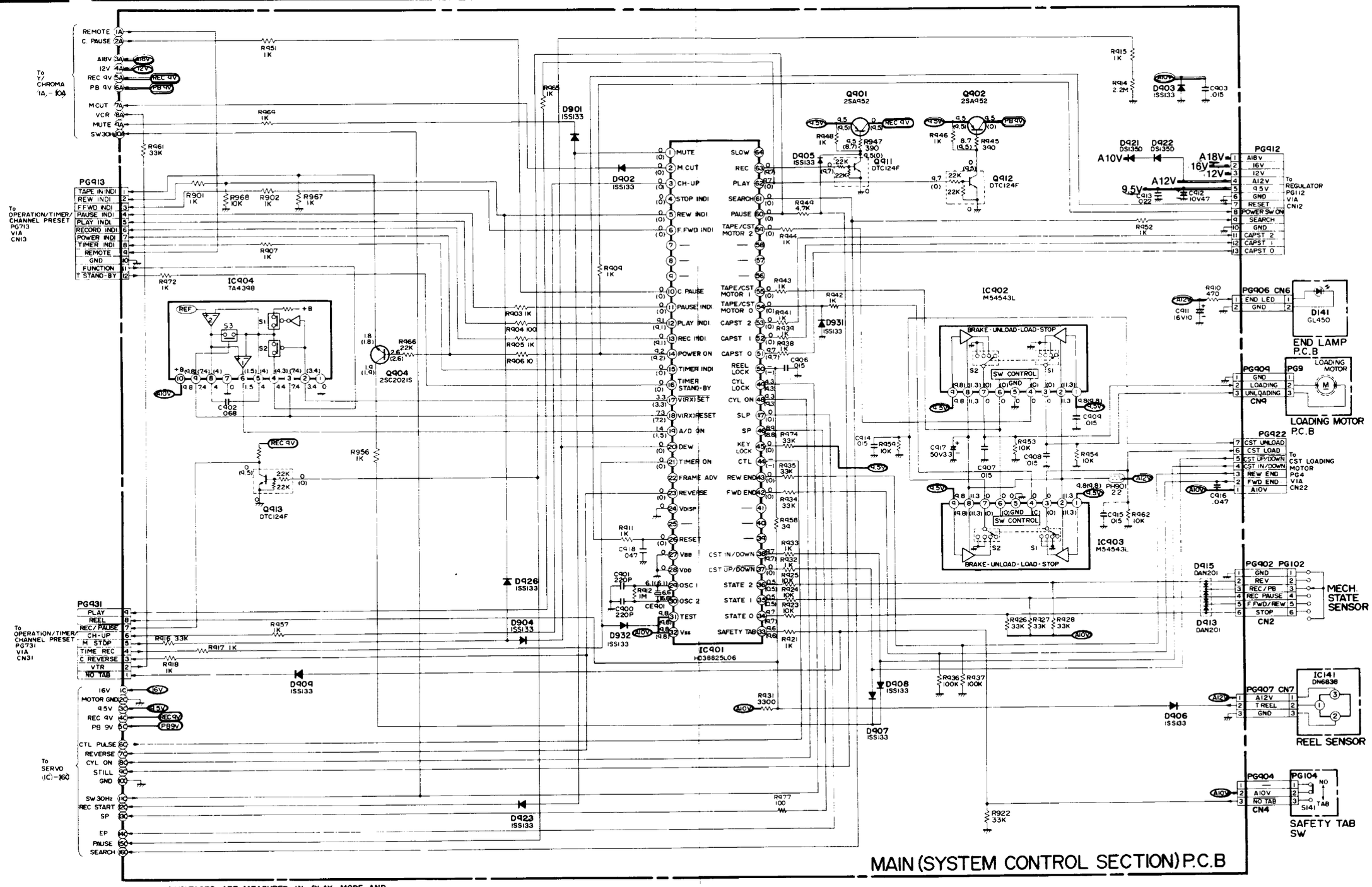

VT-34A system control schematic

*VOLTAGES ARE MEASURED IN PLAY MODE, AND VOLTAGES IN ( ) ARE MEASURED IN RECORD MODE.

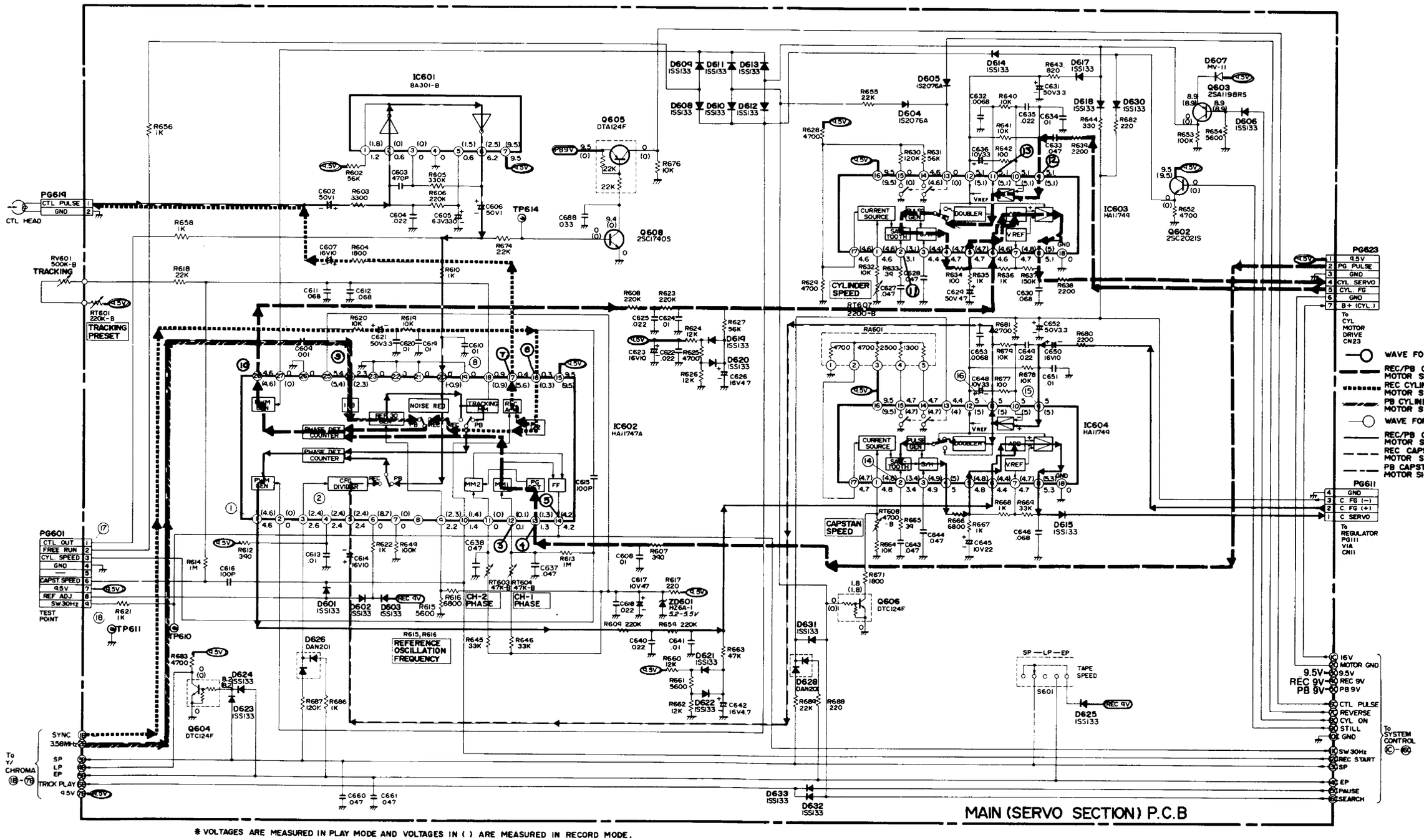

* VOLTAGES ARE MEASURED IN PLAY MODE AND VOLTAGES IN ( ) ARE MEASURED IN RECORD MODE.

VT-34A servo schematic

Panasonic PV-4860, PV-4862 and VH5685 VCRs

VIDEO REC MODE | VIDEO PB MODE | CAPSTAN PHASE LOOP | CYLINDER SPEED LOOP | CYLINDER PHASE LOOP | AUDIO REC MODE | AUDIO PB MODE

NOTE: HOW TO READ CONVERGED LINES
(100)B4
LOCATION GRID OF THE OTHER END OF THE LINE
LINE NUMBER

IMPORTANT SAFETY NOTICE:
COMPONENTS IDENTIFIED BY THE SIGN ⚠ HAVE SPECIAL CHARACTERISTICS IMPORTANT FOR SAFETY.
WHEN REPLACING ANY OF THESE COMPONENTS, USE ONLY THE SPECIFIED PARTS.

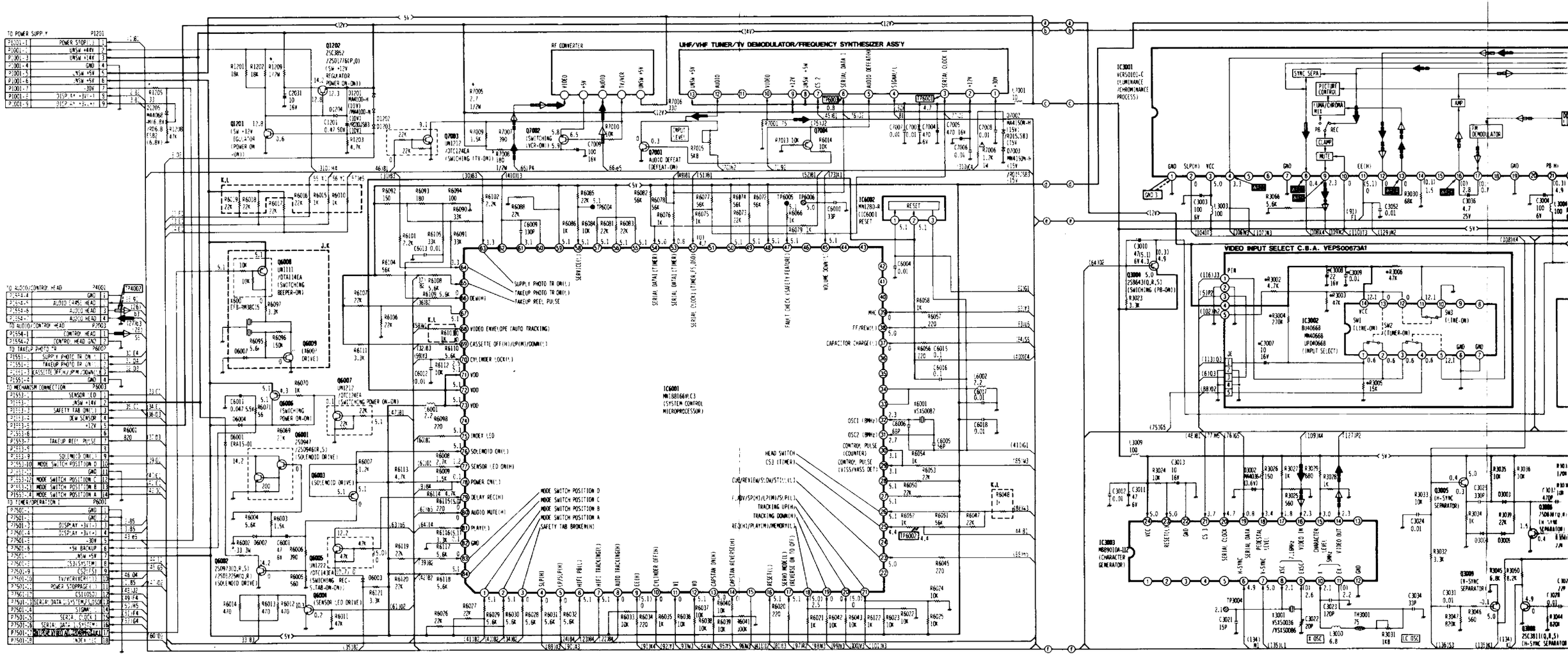

PV-4860, PV4862 and VH5685 system control/signal process/power supply schematic

Panasonic PV-4860, PV-4862 and VH5685 VCRs

CYLINDER SPEED LOOP CYLINDER PHASE LOOP AUDIO REC MODE AUDIO PB MODE

NOTE: HOW TO READ CONVERGED LINES
(100)B4
LOCATION GRID OF THE OTHER END OF THE LINE
LINE NUMBER

IMPORTANT SAFETY NOTICE:
COMPONENTS IDENTIFIED BY THE SIGN ⚠ HAVE SPECIAL CHARACTERISTICS IMPORTANT FOR SAFETY.
WHEN REPLACING ANY OF THESE COMPONENTS, USE ONLY THE SPECIFIED PARTS.

TEST POINT INFORMATION
- ●: USED FOR THE INDICATION OF TEST POINT WITH TEST PIN
- : USED FOR THE INDICATION OF TEST POINT WITH COMPONENT LEAD ON FOIL SIDE AND COMPONENT SIDE
- : USED FOR THE INDICATION OF TEST POINT WITH COMPONENT LEAD ON FOIL SIDE
- : USED FOR THE INDICATION OF TEST POINT WITH COMPONENT LEAD ON COMPONENT SIDE
- ⊘: USED FOR THE INDICATION OF TEST POINT WITH NO TEST PIN

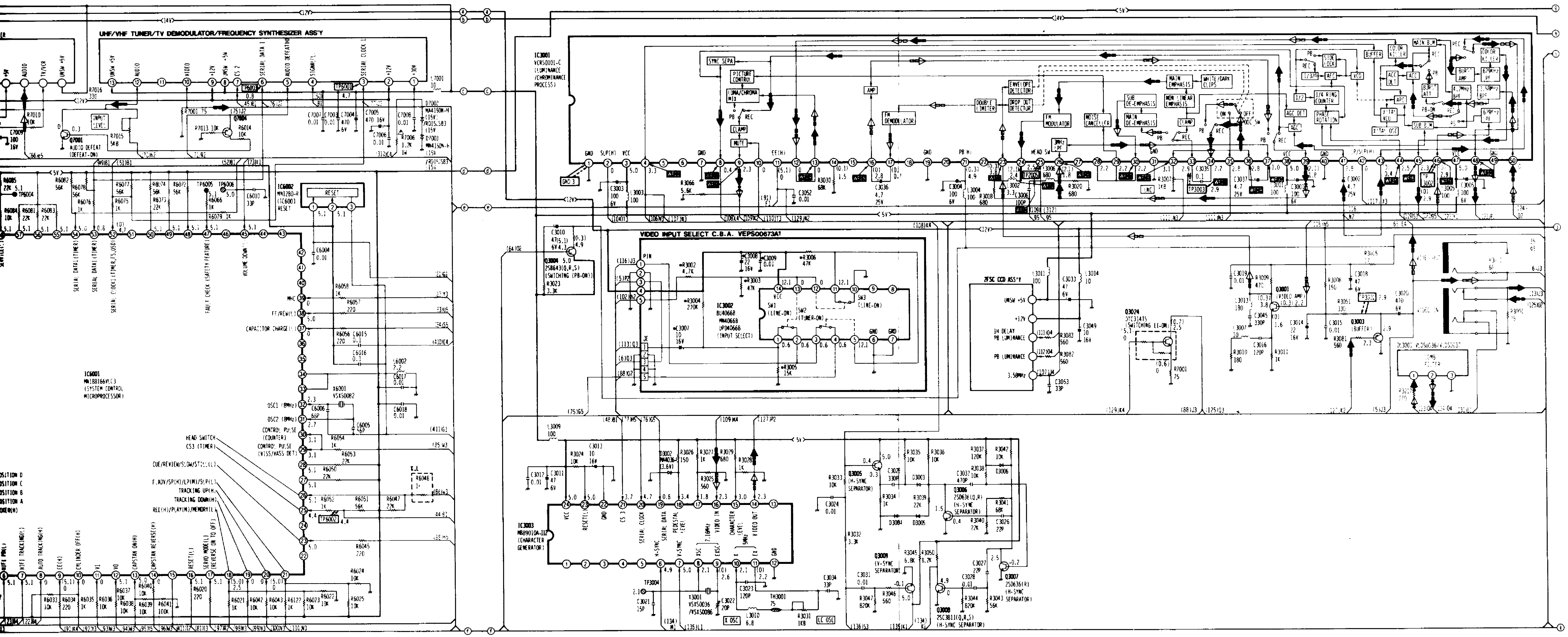

NOTE: HOW TO READ CONVERGED LINES
(100)B4
LOCATION GRID OF THE OTHER END OF THE LINE
LINE NUMBER

VIDEO REC MODE
VIDEO PB MODE
CAPSTAN PHASE LOOP
CAPSTAN SPEED LOOP
CYLINDER PHASE LOOP
CYLINDER SPEED LOOP
AUDIO REC MODE
AUDIO PB MODE

TEST POINT
●:USED
:USED
:USED
:USED
:USED

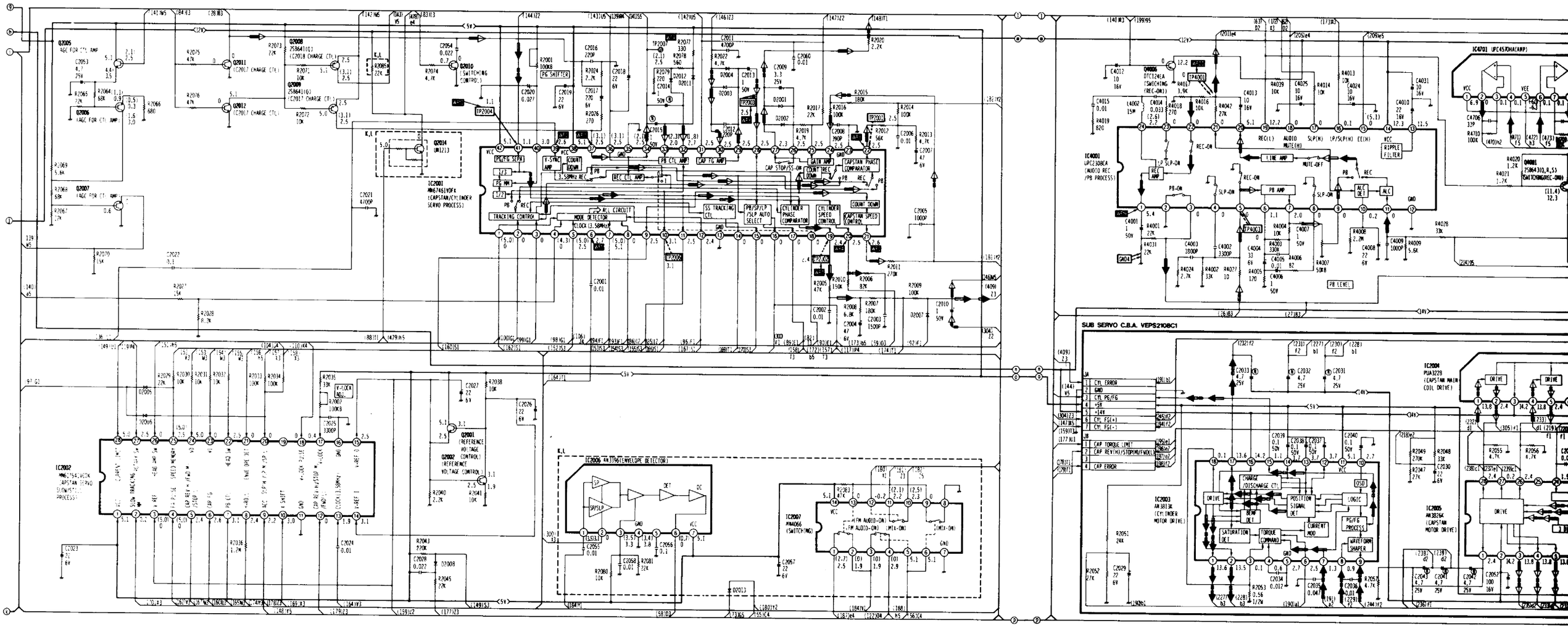

PV-4860, PV-4862 and VH5685 servo/audio schematic

D READ CONVERGED LINES
34
LOCATION GRID OF THE OTHER END OF THE LINE
LINE NUMBER

CAPSTAN SPEED LOOP — CYLINDER PHASE LOOP — CYLINDER SPEED LOOP — AUDIO REC MODE — AUDIO PB MODE

TEST POINT INFORMATION
●:USED FOR THE INDICATION OF TEST POINT WITH TEST PIN
:USED FOR THE INDICATION OF TEST POINT WITH COMPONENT LEAD ON FOIL SIDE AND COMPONENT SIDE
:USED FOR THE INDICATION OF TEST POINT WITH COMPONENT LEAD ON FOIL SIDE
:USED FOR THE INDICATION OF TEST POINT WITH COMPONENT LEAD ON COMPONENT SIDE
:USED FOR THE INDICATION OF TEST POINT WITH NO TEST PIN

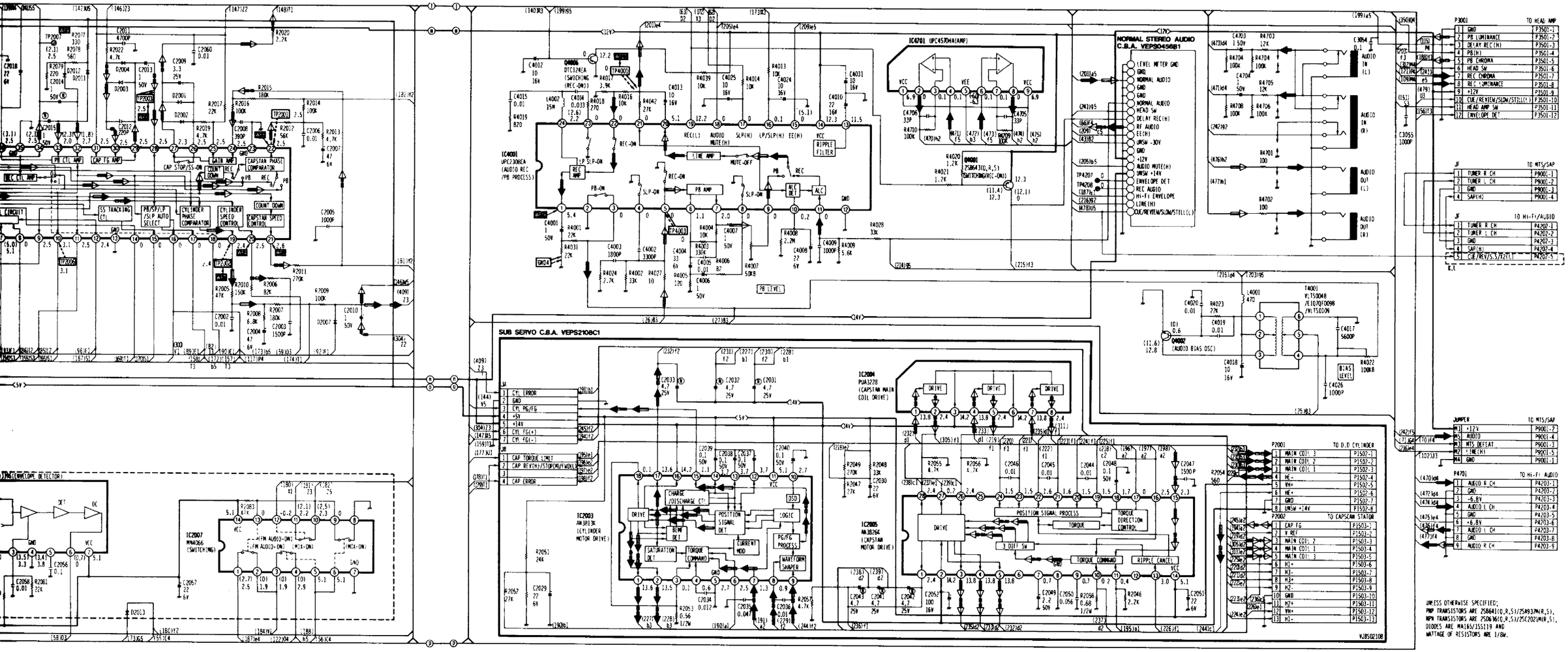

12/S Schematics

12/S - VCR	Video Cassette Recorder
12/S - VCR - SO	Sony
12/S - VCR - SO-VO-5800 (Pages 1 - 4)	VO-5800

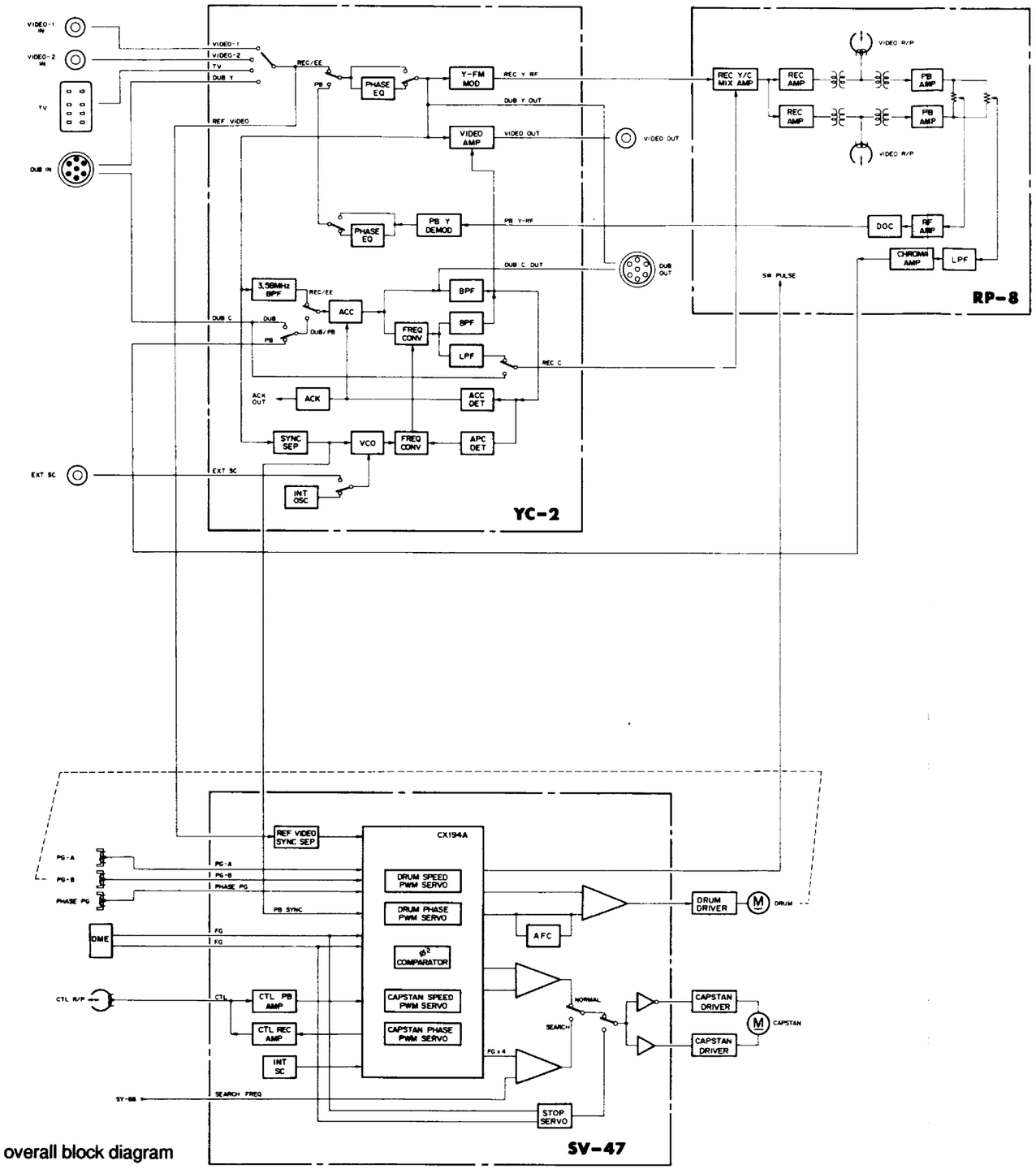

VO-5800 overall block diagram

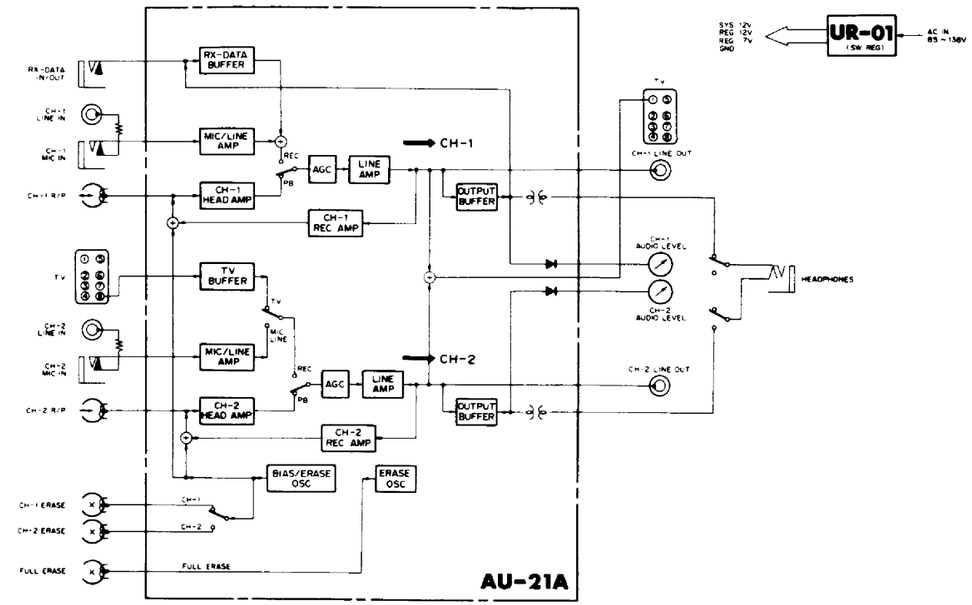

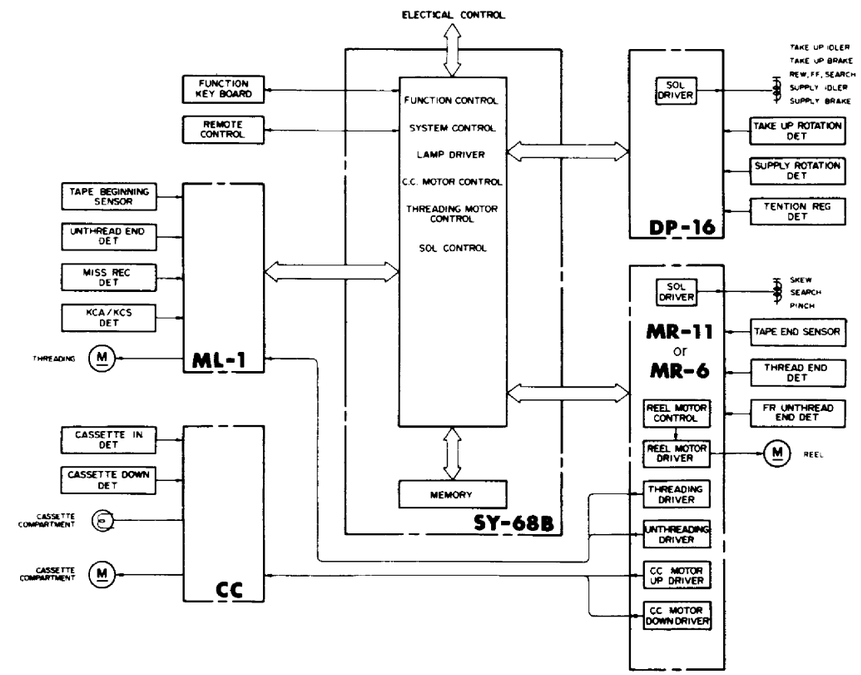

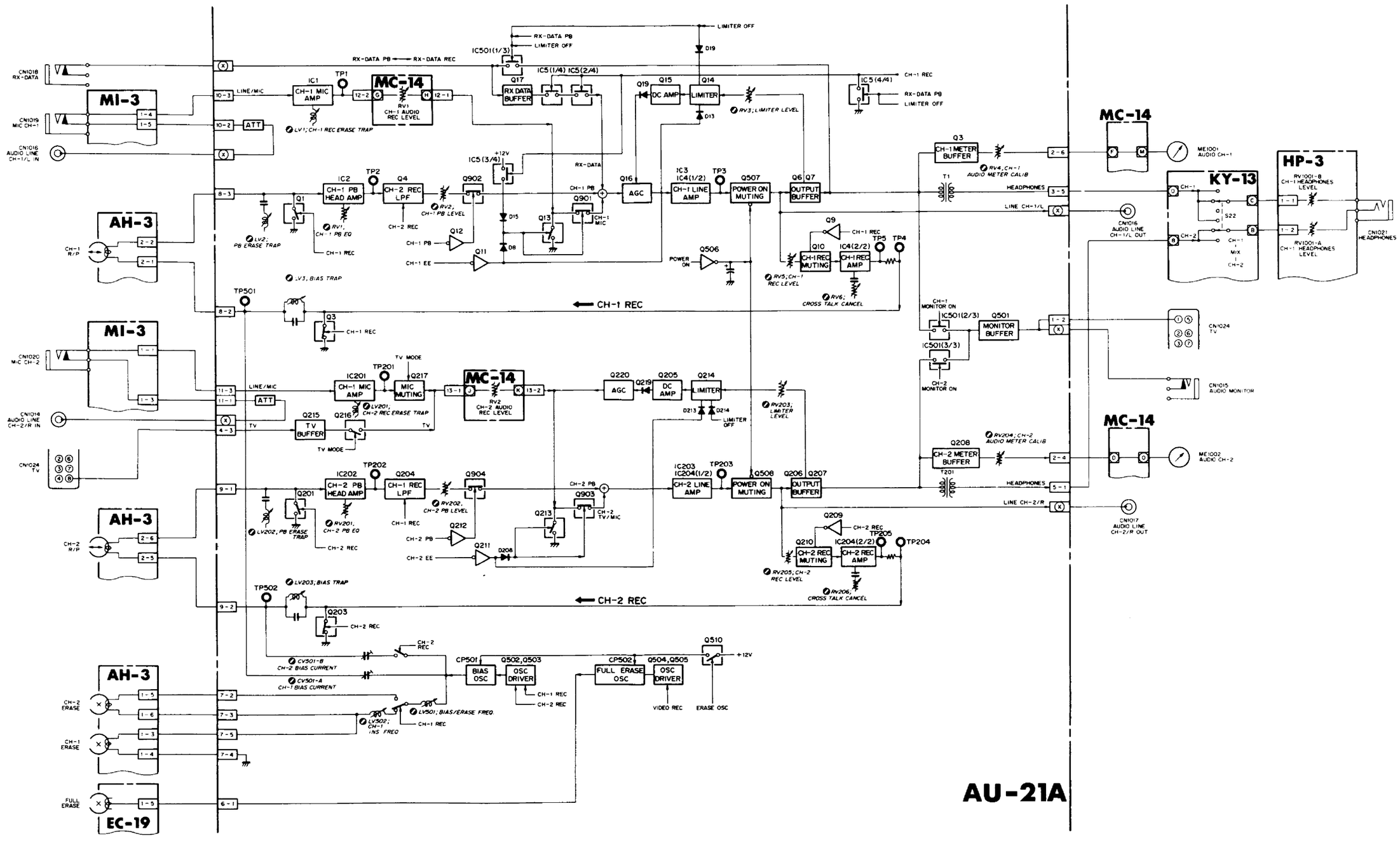

VO-5800 audio system block diagram